CONTENTS

1 Instructions Before Using the Vehicle 17

Introduction 18

Owner's Handbook 18
Announcement 18
Privacy Statement 20
Symbols Used 20

Vehicle Identification Information 22

Vehicle Identification Markings 22
Vehicle Identification Plate 23

Instructions for Use of a Hybrid Vehicle 24

Ambient temperature for vehicle use 24
Instructions for recycling high-voltage battery packs 24
Driving Range 25
Equalisation Charging 26
Intelligent Charging 26
Intelligent heating* 27
Crash Outage Control 27
High Voltage System 27
Precautions in the Event of an Accident 29

CONTENTS

Charging and Discharging Guide **30**
Charging Your Vehicle at Home 30
Home Charging Guide 31
Influence of Charging Operation on Special Populations 32
Charging Port 32
Charging Identification Number* 35
Charging operation 37
Charging Information 38
Equalisation Charging 38
Charging Time 39
Discharge Guide 41
Battery Safety Information **43**
High Voltage Battery Pack 43
12V Lead-acid Battery 44
Portable Batteries (button type, cylindrical, built-in batteries, etc.) 45
2 Brief Introduction to Vehicle Functions **47**
Instrument Pack **49**
Warning Message 51
Warning Lamps and Indicators **52**

Lights and Switches **67**
Master Light Switch 67
Touch Panel Switch of Instrument Panel 69
Switching between High Beam and Low Beam 70
Turn Signal Lamp 73
Hazard Warning Lamp 74
Wipers and Washers **75**
Front Windscreen Wiper and Washer Operation 75
Rear Window Wiper and Washer Operation 77
Horn **78**
Rearview Mirors **79**
Exterior Rearview Mirrors 79
Interior Rearview Mirrors 82
Sunvisor **84**
Windows **85**
Power Operated Window Switch 85
Sunroof **88**
Instructions for Use 88
Sunroof Operation 89

CONTENTS

Interior Lighting **94**
Front Interior Lamp 94
Second-row Interior Lamps 95
Third-row Interior Lamps 96
Power Socket **97**
Front Console Power Socket 97
Loadspace Power Socket 98
Second-row USB Port 98
Third row USB port 99
Wireless Charging System for Mobile Phones* **100**
Wireless Charging of Mobile Phones 100
Storage Devices **102**
Instructions for Use 102
Glove Box 102
Storage Box 103
Cup Holder **105**
Centre Console Cup Holder 105
Second-row Armrest and Cup Holder 105
Third-row Cup Holder and Storage Box 106

3 Preparations for Trip **107**

Key **108**

overview 108

Replace the Smart Key Battery 110

Anti-theft Systems **113**

Power Immobiliser 113

Body Anti-theft System 113

Tailgate **118**

Electric tailgate 118

Tailgate Emergency Open 121

Load Carrying **123**

Load Space 123

Internal Loading 123

Towing **124**

Fuel system **127**

Fuel requirements 127

Fuel filler 128

Fuel filling 130

CONTENTS

Steering System **131**
Steering Wheel Position Adjustment 131
Steering Feel 132
Alcolock* **133**
4 Drive the Vehicle **135**
Starting and Stopping the Power System **136**
Start Switch 136
Starting the Power System 137
Stopping the Power System 138
Economical and Environmental Driving **139**
Running-in 139
Environment Protection 139
Economic Driving 139
Driving in Special Environment 140
Check and Service 142
Electric Drive Transmission **143**
Instructions for use 143
Drive modes 143

Electric Drive Transmission Protection Mode 145
Energy Recovery 147
Driving Mode 148
Parking Brake 150
Electronic parking system (EPB) 150
Service brakes 152
Power source setting 154
5 Leave Home Safe 155
Seat Belt 157
Overview 157
How to Wear Seat Belts Properly 158
Children and Seat Belt 162
Seat Belt Pre-tensioners 163
Seat Belt Checks, Maintenance and Replacement 164
Airbag Supplementary Restraint System 167
Overview 167
Airbag Deployment 168
Conditions in Which Airbags Will Not Deploy 172

CONTENTS

Service and Replacement of Airbags 174
Child Restraints 176
Important Safety Instructions about Using Child Restraints 176
Fixing Child Restraints 179
Child Restraint Groups and Installation Position 182
Child Protection Locks 186
Body Stability Control System 187
Antilock Brake System (ABS) 188
Auxiliary Brake System 190
Automatic Parking (Auto Hold) 191
Hill Hold Control (HHC) 194
Hill Descent Control (HDC) 195
Active Rollover Protection (ARP) 197
Emergency Braking Hazard Warning Strobe (HAZ) 198
Tyre Pressure Monitoring System (TPMS) 199
6 Comfort Systems 201
Seat Adjustment 202

Front Seats 202
Second-row Seats 203
Third-row Seats 205
Head Restraint Operation 205
Seat Ventilation Function* 206
Seat Heating Function 207
Ventilation System 208
A/C Filter Element 210
Vents 210
Front A/C Panel 212
Front A/C Interface Shortcut Button 213
Front Blower Speed Decrease Button (-) 213
Front Blower Speed Control Button (+) 213
Defrost/Demist 213
Heated Rear Window 213
Front A/C On/Off Shortcut Button 214
Front Automatic Temperature Control Mode Button 214
Rear A/C Panel 215
Rear Temperature Control 215

Rear A/C Control Panel Display 215
Rear Blower Speed Control 216
Rear AUTO Mode 216
Rear Face Mode Button 216
Rear Face/Feet Mode Button 216
Rear Feet Mode Button 217
Rear A/C System On/Off Button 217
Intelligent Display 218
Main System Interface 218
Map and Navigation 218
7 Intelligent Driver Assistance 219
Intelligent Driver Assistance Description 221
Intelligent Driver Assistance Disclaimer 221
Cameras and Radars 223
Driver assistance camera 223
Driver assistance radar 226
Adaptive Cruise Assist (ACC) 228
Adaptive cruise activation 228

Adaptive cruise target following interval adjustment 230
Adaptive cruise target speed adjustment 230
Turning adaptive cruise control OFF 231
Adaptive cruise automatically exits activation 231
Adaptive cruise reactivation 232
Adaptive cruise override 232
Clear the target speed memory 232
Description of limited functionality 232
Special driving environment 233
Intelligent Cruise Assist (ICA) 237
Intelligent Overspeed Alarm* 241
Forward Collision Assist 244
Lane Departure Assist 248
Speed Limit Assist* 252
Speed Limit Assist 252
Blind Spot Safety Assistance (BSD, LCA) 257
Backward Traffic Assist (RCTA, RCTB) 259
Rearward Collision Warning (RCW) 261

CONTENTS

Door Opening Warning (DOW) **262**
Ultrasonic Sensor Parking Assist System **264**
360 Around View **266**
Driver Monitoring System **268**
MG Pilot Customisation **269**

8 Road Emergency Response **271**

Hazard Warning Devices **272**
Warning Triangle 272
Emergency Starting **273**
Emergency SOS call (eCall)* **276**
Towing Hook and Transport **278**
Vehicle Towing 278
Vehicle Transport 280
Tyre Repair* **282**
Tyre Repair Tool 282
Tyre Repair 282

9 Maintenance **285**

Maintenance Instructions **287**
Regular Maintenance 287
Bonnet **291**
Opening the Bonnet 291
Closing the Bonnet 291
Bonnet Open Alarm 291
Engine Compartment **293**
Engine Oil **294**
Engine Oil 294
Engine Oil Check and Refill 297
Engine Oil Specification 298
Coolant **299**
Coolant Check and Top Up 299
Coolant Specification 299
Catalytic Converter and Particulate Filter **301**
Protection layer 301
High-voltage Battery Pack **303**
Precautions and restricted conditions for use of battery 303

CONTENTS

Brakes and Brake Fluid **305**
Brake Fluid Check and Top Up 305
Fuse Replacement **307**
Fuse 307
Passenger Compartment Fuse Box 308
Front Compartment Fuse Box 312
12V Battery Maintenance and Replacement **316**
Battery Maintenance 316
Battery Replacement 317
Bulb Replacement **318**
Bulb Specification 318
Washer **319**
Washer Fluid Check and Top Up 319
Washer Nozzles 320
Wipers **322**
Wiper Blades 322
Front Windscreen Wiper Blade Replacement 323
Rear Window Wiper Blade Replacement 324

Tyres **325**
Overview 325
Tyre Inspection 327
Tyre Wear Indicators 328
Tyre Rotation 329
Anti-skid Chain 330
Cleaning and Car Care **331**
Exterior Cleaning 331
Interior Cleaning 337
10 Technical Data **341**
Technical Data Dimensions **343**
Complete Vehicle Mass Parameters **345**
Towing Parameters **346**
Main Engine Parameters **348**
Main parameters of hybrid motor **349**
Parameters of High Voltage Battery Pack **350**
Battery pack type 350
Dynamic Performance Parameters **352**

CONTENTS

Recommended Fluids and Capacities **353**
Wheel Alignment (unladen) **354**
Wheels and Tyres **355**
Recommended Tyre Pressures (Cold) **356**

1

Instructions Before Using the Vehicle

Introduction 18

Vehicle Identification Information 22

Instructions for Use of a Hybrid Vehicle 24

Charging and Discharging Guide 30

Battery Safety Information 43

Introduction

Owner's Handbook

Thank you for purchasing the following MG product. Please read this handbook carefully since the information in it will allow you to know how to operate your vehicle; enhancing your driving experience.

This handbook describes various features and functions of the vehicle series in detail.

This handbook includes the up-to-date product information available at the time of release and the company has the full authorities to take charge of the amendments, explanations and statements of this handbook.

MG MOTORS UK LTD aims to ensure a continuous improvement upon all products, therefore, the product may be altered without prior notice even after the handbook has been completed. The specific content will be subject to the latest version in the website or MG iSMART APP .

The illustrations in the Owner's Handbook are for reference only.

For any question on the purchased car or owner's handbook, please consult our Authorised Repairer.

Note: The vehicle has a software update function, and the information contained in this handbook may vary slightly depending on the vehicle configuration, software version and sales regions.

Note: The implementation of some functions requires the vehicle to be in a specific power mode. Please pay attention to the vehicle power status during operation.

Note: The English Version of this Owner's Handbook shall take precedence wherever there is a discrepancy between the English and the versions in different languages.

Announcement

The Authorised Repairer in this handbook refers to any MG authorised repairer, whom are familiar with the service and maintenance procedure of the car, the related regulations and is equipped with the necessary special tools and spare parts. Providing a professional service.

Please always use accessories, parts, oils and fluids in conformity with MG Motor technical specifications and quality standards and applicable to the vehicle, and maintain and service your vehicle in accordance with correct operation procedures. For better maintenance and service of your vehicle, you are recommended to consult an MG Authorised Repairer.

Please respect intellectual property and use genuine accessories, parts, etc. If any accessories and parts which may infringe intellectual property are used, you will probably bear corresponding legal risks and legal consequences.

Various countries and regions impose strict restrictions on vehicle modification and add-on. It is not allowed to change the vehicle structure, framework or features without approval, otherwise it will affect traffic safety, vehicle operation, vehicle registration or public security management. It will not only cause malfunction or reduce performance of the related components, but also bring the harm and life-threatening risk to the driver and the passengers if parts of the vehicle are modified or altered without permission.

Any damage resulting from misuse, negligence, wrong use or unauthorised modification may invalidate your right of claim. If a vehicle is damaged or incurs an accident due to the use of any accessories, parts or oils & fluids not in conformity with MG Motor technical specifications and quality standards or misuse or due to improper service and maintenance, its user will also lose his/her claim for damage compensation, and the company will not bear corresponding liabilities.

No part of this publication may be reproduced, stored in a retrieval system or transmitted in the form of electronic, mechanical recording or other means without prior written permission from the company.

Damage to the hearing system may occur if exposed to sound waves with power greater than 85 (eighty-five) decibels.

When you use the on-board audio device, it is recommended to control the volume reasonably. Excessive volume will interfere with the hearing system, which may harm your health and cause driving safety problems.

Privacy Statement

According to the configuration, Your vehicle may be equipped with an onboard audio, visual, navigation system and an intelligent connectivity system that allows you to connect to your vehicle via our iSMART on your mobile phone. In context with the provision of the intelligent connectivity system and the app, we process personal data.

We highly respect your privacy and personal information, and we will inform you of the following important information through the Privacy Notice. The latest version of the Privacy Notice can be found on your vehicle screen. If the Privacy Notice is not available to you on your vehicle screen, please read the privacy notice in your mobile app.

The contents of this notice may change from time to time, so you should review it periodically. Where possible, we will also contact you directly to notify you of any substantial changes.

Symbols Used

Warning



This warning symbol identifies procedures that must be followed precisely, or information that must be considered with great care, in order to reduce the risk of personal injury or serious damage to the car.

IMPORTANT

IMPORTANT
The statements stated here must be followed strictly, otherwise your car could be damaged.

Note

Note: This describes helpful information.



This symbol indicates parts described must be disposed of by authorised persons or bodies to protect the environment.

Asterisk

An asterisk (*) appearing after the title or the text identifies features or items of equipment that are only fitted to some models and may not be fitted on the vehicle you purchased.

Note: This function is equipped in some models, or can be obtained through configuration option, software update, or subscription upgrade. If you have any questions, please contact an MG Authorised Repairer or call the customer hotline.

Illustration Information



Identifies components being explained.



Identifies movement direction of components being explained.

Vehicle Identification Information

Vehicle Identification Markings

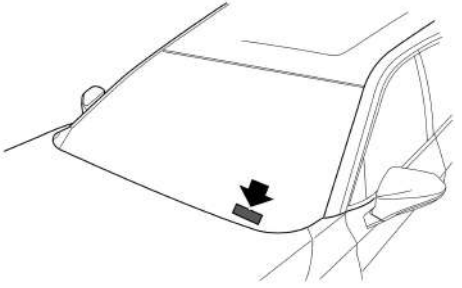

Vehicle Identification Number (VIN)

When communicating with your local MG Authorised Repairer, always quote the Vehicle Identification Number (VIN). If the engine or transmission is involved, it may be required to provide the identification numbers of these assemblies.

Vehicle Identification Number (VIN) Location

Vehicle Identification Number (VIN)

- On the floor under the front passenger seat;
- On the instrument panel visible through the bottom left hand corner of the windscreen;
- On the identification plate;
- On the inner side of the liftgate visible by opening the liftgate.

Note: The DLC of the vehicle is located above the driver side lower closure panel, and the VIN information can be read using the approved diagnostic equipment.

Engine Number

Stamped on the front right of the cylinder block (View from the front of the engine).

Transmission Number

On the surface of the transmission housing in the engine compartment or on the surface of the transmission valve body cover. The transmission numbers of certain models are only visible by raising

the vehicle, please contact a local MG Authorised Repairer.

Vehicle Identification Plate

The identification plate is located at the lower part of B pillar. It contains VIN, manufacturer name, etc.

Instructions for Use of a Hybrid Vehicle

Ambient temperature for vehicle use

The working performance of the high-voltage battery pack fitted to your vehicle is related to the ambient temperature. This battery powers the vehicle power system and therefore it is recommended that where possible, the vehicle should be used within the temperature range of -15℃~45℃ . This will ensure that the vehicle is in the optimum working state and will help extend the service life of the high-voltage battery pack. Extremely high or low temperatures will affect the performance of the high-voltage battery pack and vehicle.

Instructions for recycling high-voltage battery packs

The high-voltage battery packs mounted at the bottom of the chassis which contains numerous lithium cells. Arbitrary disposal may cause pollution and harm to the environment. Therefore, they should be recycled and disposed by an MG Authorised Repairer or designated cooperation units by observing the following information or requirements.

- Personnel: ONLY qualified personnel should dismantle the high-voltage battery pack.
- High-voltage safety: the high-voltage battery pack features high-voltage components such as the lithium battery pack and the high-voltage harness. DO NOT attempt to dismantle any area of this system, suitably trained professional staff must observe insulation safety protection before working on or near the high voltage system.
- Transportation: The high-voltage battery pack is classed as a Category 9 hazardous material and must be transported by vehicles qualified in transporting Category 9 hazardous materials.
- Storage: all high-voltage components (including the high-voltage battery pack) should be stored at room temperature and in a dry environment. They must be kept away from dangerous sources, such as flammable objects, heat and water sources.

It is recommended that you hand over the used high-voltage battery pack generated from vehicle scrapping or other reasons to the recycling service

outlet designated by MG for disposal. The maintenance, recycling and disposal of high-voltage battery packs will be done by the recycling service outlet designated by MG. For details, please consult an MG Authorised Repairer.

Note: Waste high-voltage battery packs should be handed over to other units for disposal. If dismantling or dismantling high-voltage battery packs without authorisation leads to environmental pollution or safety accidents, the owner of the high-voltage battery pack should bear corresponding responsibilities.

Driving Range

The driving range of your vehicle depends on the quantity of available electricity, vehicle age (current remaining battery life), weather, temperature, road conditions and driving habit etc.

The range can be affected by other electrical loads (such as A/C and lights) and driving style.

Caution:

- The actual driving range of the vehicle will reduce with the increase of vehicle age.
- The use of air conditioning will reduce the driving range.
- The driving range varies with the speed.
- When the vehicle is used at low temperatures, the driving range will decrease due to temperature characteristics of the battery.
- In the case of extreme temperature and low battery, weak acceleration or lack of power may occur due to battery characteristics.

The driving range can be increased by:

- Having the vehicle maintained regularly;
- Maintaining proper tyre pressures;
- Use the vehicle as few as possible at high or cold temperatures.
- Do not park or store the vehicle for long periods with a low state of charge, where possible charge the vehicle as soon as possible prior to storage.
- Remove unnecessary articles to reduce the vehicle load.
- When necessary, turn off the high power consuming systems that will use large amounts of

power, such as A/C and heating, to increase the driving range.
- At a high speed, where possible, close the windows to reduce wind resistance and power consumption.
- Try to maintain a steady speed at all times.
- During acceleration, apply the accelerator pedal as gently as possible.
- During deceleration, release the accelerator pedal; under certain conditions when not applying the brake or gently applying the brake, the kinetic energy regeneration system (KERS) will extend the driving range.

The SOCE value represents the retention rate of the current maximum available battery energy compared to that of a new battery. The lower the SOCE value, the less energy the battery can provide after being fully charged.

Note: As the battery undergoes repeated charging and discharging cycles, a decrease in the SOCE value is a normal characteristic of the battery. A reduction in the SOCE value means that the expected range after a full charge will also be shortened.

Equalisation Charging

In order to assist in extending the service life of the high-voltage battery pack, it is recommended that an equalisation charge should be carried out at regular intervals.

For the necessity of equalisation charging, refer to 'Equalisation Charging' under the 'Charging and Discharging Guide' section.

Intelligent Charging

When the vehicle is powered OFF and the system detects that the 12V battery is running low, the vehicle will automatically charge the 12V battery under certain conditions to ensure the vehicle starts. This function will be automatically turned off once the battery has been completely charged.

Note: The system will suspend intelligent charging if a fault is present, when starting or the vehicle is being charged by an external device.

Note: The driving range will be reduced after intelligent charging.

Note: The intelligent charging function is suspended when the high voltage battery is in a low SOC.

Intelligent heating*

When the temperature outside the car is low, the power battery automatically heats up, improving driving performance and charging speed, but at the same time, it consumes some power, resulting in a decrease in driving range.

Crash Outage Control

If a crash occurs, a signal from the SDM will disconnect the relays within the high-voltage battery back to cut off the high-voltage output of the high-voltage battery pack.

High Voltage System



- ***There are two kinds of high voltage power supplies (AC and DC) in the high voltage system of the vehicle. These high voltage system components are attached with warning labels of high voltage system. Please always observe the safety requirements on the labels.***
- ***To avoid personal injury, non-professional maintenance personnel are prohibited from contacting, dismantling or fitting any component of the high-voltage system without permission.***

High Voltage System Layout

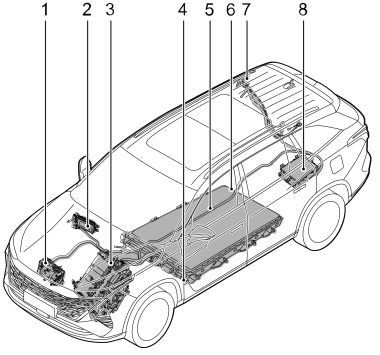

1 Electric air conditioning compressor
2 Air conditioning electric heater
3 Electric Drive Transmission
4 Manual Service Disconnect
5 High voltage wiring harness
6 High voltage battery pack
7 Charging port
8 High and low voltage charging integrated module

Precautions in the Event of an Accident



- *Ensure the vehicle is in P, the parking brake is applied and the vehicle power system is OFF.*
- *If any cables on the vehicle are exposed, in order to prevent electric shock or even death DO NOT make any contact with any cable.*
- *If the vehicle catches fire and the fire is small and slow, a carbon dioxide extinguisher can be used to extinguish the fire. Please ensure the fire services have been contacted as soon as possible; if the fire is large and is spreading quickly, immediately evacuate the vehicle and contact the fire services.*
- *If the vehicle is involved in a collision and cannot be re-started, the negative cable of 12V battery and Manual Service Disconnect (MSD) MUST be disconnected prior to rescue.*
- *When the vehicle is completely or partially immersed in water, switch off the vehicle power system and evacuate the car immediately. The negative cable of the 12V battery and Manual Service Disconnect (MSD) MUST be disconnected prior to rescue or as soon as the vehicle is refloated/removed from the water. Observe the water/vehicle for any abnormal signs such as excessive bubbles or noises, this may indicate battery short circuit issues. If no signs are evident, there should not be a shock risk from the body work and recovery can commence.*
- *If your car is being recovered by an independent recovery agent, please contact an MG Authorised Repairer for guidance.*
- *The vehicle is supplied with an emergency response information card. Please show the card to the rescue personnel when they arrive.*

Charging and Discharging Guide



Check will be conducted to confirm whether the state of charge socket is good or not before charging.



The charging connector should be connected to the charge socket in the body before operating the charging device.



When the vehicle is being charged. it cannot be started.



During the charging operation, please do not interfere with the power supply device or the vehicle.



Should the charging pile break down, immediately notify the relevant professional and DO NOT interact with the charge pile until authorisation has been given.



Once the vehicle has been charged, turn off the charging device first, unlock the vehicle, disconnect the charging connector from the charge port and close the charging port door.



Charging can be conducted in poor weather conditions, but rainproof measures will need to be adopted for charging connector and charging port in the process of removing and inserting the charge connector. Charging MUST be stopped in extremely poor weather conditions such as a storm.



Never use any high pressure washing equipment directly in the charging port area when cleaning.

Charging Your Vehicle at Home

Whilst your MG has been supplied with a home charging pile, it is essential that you check with a qualified electrician that the infrastructure of your property will support the charging equipment. Please

seek qualified advice that your current electrical supply and circuits will support the requirements of the charging equipment.

Home Charging Guide

ONLY use certified approved equipment.

ONLY use qualified suppliers and installers.

When the high-voltage battery pack is fully charged, disconnect the charging plug from the vehicle socket. If it is necessary to interrupt the charging of the vehicle, isolate the power supply first, then disconnect the charging plug.

NEVER allow water or fluids to enter your charger or vehicle charging sockets.

NEVER use damaged charging piles, equipment or sockets.

STOP charging immediately if you see anything unusual, smell something burning or see sparks.

ALWAYS follow the operating instructions supplied with your charging equipment.

Influence of Charging Operation on Special Populations

High voltage charging equipment can create areas of strong electromagnetic interference, this may cause operational issues with electronic medical devices.

When using medical electrical devices such as pacemakers or cardioverter defibrillators (ICD) , please consult your doctor about whether charging or discharging your electric vehicle will have an impact on the operation of the device. In some instances, electromagnetic waves that are generated from the charger can seriously impact medical electric device operation.

Note: There are no cautions issued about medical devices when the car is not connected to a charge pointand charging. It is perfectly safe for individuals fitted with pacemakers or cardioverter defibrillators to drive or ride in the vehicle.

Charging Port

The charging port is behind the charging port cover located at the rear left of the vehicle. It is incorporated into the central lock system.

Unlock the vehicle, press the charging port cover and release - You will then be able to open the charging door, revealing the charge port. .

Charging port - type one*

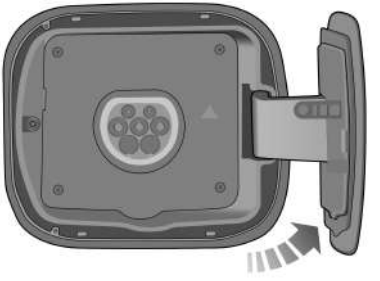

1 Slow charging port

Charging port - type Two*

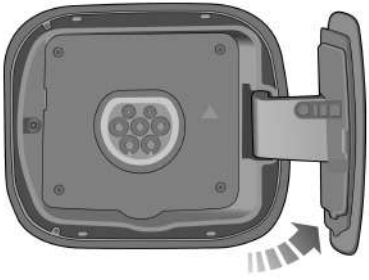

1 Slow charging port

Charging port - type Three*

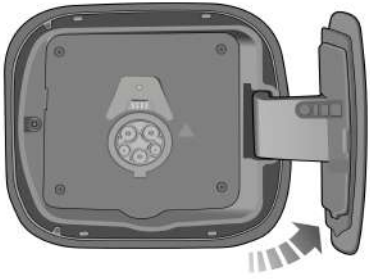

1 Slow charging port

ALWAYS ensure that any excess water is removed from the port area before connecting any charging device. To use the fast charging port, it is required to remove the waterproof plug cover.

Once the vehicle has been charged, refit the waterproof plug cover (where necessary), close the

charging port cover, push the cover fully home until the latch locates.

Note: Do not forcefully open the charging port door when it is not unlocked.

Charging Port Electronic Lock

In order to prevent the charging connector being disconnected inadvertently when charging, the charging socket features an electronic locking mechanism.

The electronic lock is activated as soon as the vehicle begins charging and remains in a locked state until the charging is finished or interrupted.

Whilst the charging cable is connected, DO NOT attempt to remove the plug.

Manually Releasing the Charging Port Lock in Emergency Situations

The vehicle features an emergency release device for the charging port lock. Lift the loadspace carpet to expose the emergency release cable of the charging port electronic lock, as shown below.

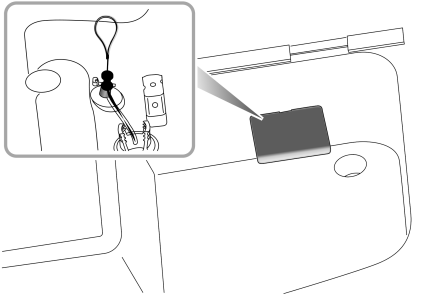

Under any circumstance, if the automatic unlocking function of charging port electronic lock fails, pull the emergency release cable to unlock the electronic lock and then pull out the charging gun.

Charging Identification Number*

Identifier Label on Slow Charging Kit

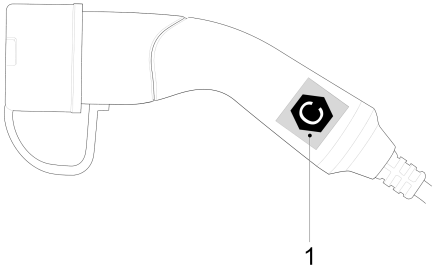

1 AC charging identifier label

Identifier Labels on Charge

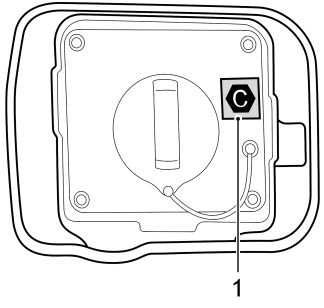

Port

1 AC charging identifier label

Precautions for Charging

After opening the charging port door, check the charging identifier symbol on the cover. Check the charging plug identifier label on the charging pile. After checking that the alphabetic characters of the charging identifier labels match, proceed to the next charging step.

Note: Risk of failure, fire or injury etc. when using a charging connector with unmatched identifier symbols.

Electric charging identifier label symbol table

Supply Type	Configuration	Type of Accessory	Voltage Range	Identifier
AC	5 Pins	Charging port	≤480V	

Charging operation

The charging time depends on the charger output.

Note: Chargers of up to 7kW power output are supplied via standard household single phase power. Any chargers that are rated above this, 11kW for example, will require a 3 phase power supply.

Using communication charging stations

Please ensure that only charge points that meet IEC61851 and IEC 62196 are used to connect to your vehicle.

Using communication charging equipment:

1 After the Start switch is turned off, close all doors.

2 Open the charging port door and the charging port cover.

3 Insert the charging plug and lock the vehicl

4 On completion of the charge, unlock the vehicle and then disconnect the charging connector from the vehicle.

5 Make sure there is no debris or foreign matter in the charging port and then close the charging port cover and the charging port door in sequence.

Note: If at any time during the charging process you should want to check the state of charge, please switch the vehicle power system to the 'ON' position. the high voltage battery state of charge will be displayed in the message centre in the instrument pack.

Residential Charging

To use the charging function, follow the instructions below:

1 After the Start switch is turned off, close all doors.

2 Open the charging port door and the charging port cover.

3 Connect the handle of the slow charging plug to the slow charging port on the vehicle body.

4 Connect the slow charging plug to the domestic electricity supply and lock the vehicle.

5 On completion of the charge, shut off the power, unlock the vehicle, disconnect the plug from the vehicle and then the domestic plug.

6 Make sure there is no debris or foreign matter in the charging port, and then close the charge port cover and the charging port door in sequence.

Note: If at any time during the charging process you should want to check the state of charge, please switch the vehicle power system to the 'ON' position. The high voltage battery state of charge will be displayed in the message centre in the instrument pack.

Note: If the vehicle is unlocked during the charging process, charging will be suspended. Charging will resume when the vehicle is locked again. If charging does not automatically resume after locking the vehicle, it may be necessary to remove and refit the charge cable.

Charging Information

At the beginning of the charging process, the following information will be displayed within the instrument pack message centre.

Note: The information displayed on the instrument pack may vary with different types of vehicles.

Equalisation Charging

Equalisation charging means that after a normal charging process the battery management system will enter a mode where it will attempt to equalise the charge of every battery cell, so as to ensure the overall performance of the high-voltage battery pack.

Charging Time

Charging time of high-voltage battery pack is related to many factors, such as current electric quantity, charging mode, ambient temperature and charging device power.

Table of charging time

Slow charging	Residential electricity (10A)	From alarm status to 100%, it takes almost 13 hours	From alarm status to 100% and equalisation, it takes almost 14 hours	It takes approx. 16 hours to complete equalising charge before the first use of a long-time parked vehicle
	AC charging station (Single Phase, approximately 6.6kW)	From alarm status to 100%, it takes almost 4.5 hours	From alarm status to 100% and equalisation, it takes almost 5.5 hours	It takes approx. 6.5 hours to complete equalising charge before the first use of a long-time parked vehicle
	AC charging station (Three phase, approximately 11kW)	From alarm status to 100%, it takes almost 3 hours	From alarm status to 100% and equalisation, it takes almost 4 hours	It takes approx. 5.5 hours to complete equalising charge before the first use of a long-time parked vehicle

Note: The information displayed on the Instrument Pack is only a guide.

Note: Alarm status refers to the 'high voltage battery low' warning displayed in the instrument pack message centre. '100%' refers to the high voltage battery state of charge which is also displayed in the instrument pack message centre.

- At low temperatures, the charging time will be extended;
- If an equalisation charge has not been conducted for a long time, the required charge time will be extended.
- An equalisation charge must be carried out prior to using the car after a long period of storage or non use. In these cases the charging time will be extended;
- In case of controller update, the charging time may be extended.

Discharge Guide

The vehicle is equipped with a discharge function, which can convert the high-voltage direct current in the high-voltage battery pack into household alternating current.

The discharge function can be achieved through a discharge gun.

Note: Owners can choose to purchase a discharging gun from an MG Authorised Repairer.

To use the discharge function, follow the instructions below:

1 Unlock the vehicle and access the slow charging port (the slow charging port is also the discharging port).

2 Insert the discharge gun into the discharge port socket.

3 Set the cut-off power of discharge in the 'Energy Management' interface on the entertainment display. After setting, click the Start Discharging button, the electronic lock will lock the discharge gun in place and the vehicle will enter the discharge state. At this time, do not attempt to remove the discharge gun using force, as this wil cause damage.

4 The user can click the Stop Discharging button on the entertainment display to stop the discharge. Alternatively, the discharging function can stop once the power has been discharged to the set cut-off value. At this time the electronic lock will be automatically released and the discharge gun can be removed.

5 Make sure there is no foreign matter in the charging port and then close the charging port flap.

Note: When the entertainment display screen shows that the current battery level is 0, the discharging operation will not function. Please ensure the vehicle has been charged sufficiently to allow for the discharge function to operate accordingly.

Note: After the vehicle starts discharging, if the infotainment display off, the vehicle will still maintain the discharging condition.

Note: The current power status and available driving range can be displayed on the instrument cluster.

Note: During the discharge process, the user can still set the discharge power cut-off point.

Note: During discharge, the vehicle cannot be placed in 'READY' mode.

Note: Using the discharge function will reduce the driving range of the vehicle.

IMPORTANT
• Check if the discharging gun is in good condition before commencing the discharging function. • When discharging in poor weather conditions such as rain, please ensure the charging port and discharge gun are both protected. • If there is a peculiar smell, smoke, overheating or any other abnormal conditions when discharging. Immediately turn off the circuit and stop the discharging operation.

Battery Safety Information

Batteries pose potential risks and the appropriate protective measures must be taken during operation and maintenance!

Only the correct tools and suitable protective equipment must be used when handling batteries!

Maintenance of batteries must only be performed by individuals with approved certification, specialised battery knowledge and the correct safety training!

Failure to adhere to any of the above warnings may result in severe injury or even death!

WARNING

The keys supplied with your vehicle contains coin/button batteries. These batteries are Hazardous and are to be kept away from children (whether the battery is new or used).

WARNING

A lithium coin/button battery can cause SEVERE or FATAL injuries within 2 hours or less if it is swallowed or placed inside any part of the body.

WARNING

If you think batteries may have been swallowed or placed inside any part of the body, please seek medical attention immediately.

High Voltage Battery Pack

The high voltage battery pack contains several lithium-based battery cells and high voltage wiring harness.

Please refer to the following infomation and requirments.

High Voltage Safety:

1 ONLY qualified personnel are allowed to work with the high voltage system - there is danger of DEATH.

2 DO NOT attempt to dismantle any area of the high voltage or battery system, suitably trained professional staff must observe insulation safety protection measures before working on or near the high voltage system.

3 Arbitrary disposal may cause pollution, hazard and damage to the environment.

4 Short circuit of the positive and negative terminals of the battery is strictly prohibited, it will lead to strong current and high temperatures, this may cause personal injury or even a fire. Since the positive and negative terminals of the battery are exposed within a plastic protective casing, sufficient safety measures must be taken during the assembly and connection of the battery system to prevent short circuits.

5 Incorrect electrical connections may cause overheating during battery usage.

Transportation:

The high voltage battery pack is classed as a Category 9 hazardous material and must be transported by vehicles qualified in transporting Category 9 hazardous materials.

Storage:

Batteries should be stored at room temperature and in a dry environment. They must be kept away from dangerous areas and objects, such as flammable materials and sources of heat and water.

Recycling:

The high voltage battery pack MUST be recycled by a manufacturers Authorised Repairer or a professional approved dismantling agent.

12V Lead-acid Battery

- DO NOT attempt to disassemble or modify without authorisation.
- DO NOT short-circuit or reverse the positive and negative terminals.

- Keep away from children. Never use a battery that shows signs of damage, leakage or is swollen.
- DO NOT tilt or invert the battery.

Portable Batteries (button type, cylindrical, built-in batteries, etc.)

All batteries contain volatile substances, such as lithium metal, organic electrolytes and other chemicals substances. Improper use and operation may cause the battery to heat up, catch fire or even explode. Please handle with care as there is a risk of personal injury or damage. Therefore, to prevent accidents when handling batteries, the following precautions must be followed.

- Keep batteries away from children, if a battery is swallowed please seek medical attention immediately.
- DO NOT short circuit and never connect a battery using reverse polarity.
- DO NOT forcibly discharge, squeeze, puncture or burn the battery.
- DO NOT dismantle the battery.
- A failed or discharged battery should be removed from the vehicle or appliance and disposed of according to local laws or handed to professional recycling institutions.
- DO NOT mix different types of batteries.
- DO NOT expose the battery to environments of over 155°C. Always keep away from fire.
- DO NOT attempt to solder directly onto a battery post or terminal.
- Store and install the battery in it's original packaging or position to avoid any possibility of external short circuit.
- DO NOT store the battery in an Electrostatic Discharge (ESD) bag or foam.
- DO NOT store batteries on metal surfaces, always ensure there is adequate insulation.
- DO NOT stack batteries or mix battery types when storing.

Brief Introduction to Vehicle Functions

Instrument Pack	*49*
Warning Lamps and Indicators	*52*
Lights and Switches	*67*
Wipers and Washers	*75*
Horn	*78*
Rearview Mirors	*79*
Sunvisor	*84*
Windows	*85*
Sunroof	*88*
Interior Lighting	*94*
Power Socket	*97*
*Wireless Charging System for Mobile Phones**	*100*

Storage Devices *102*
Cup Holder *105*

Instrument Pack



Note: The instrument interface has two display modes: Day and Night, which can be set in the entertainment display.

Note: The gauge has a variety of display modes, It can be set on the entertainment display.

1 Left Cards

2 Warning Lamps and Indicators
Refer to 'Warning Lamps and Indicators' in this chapter.

3 Vehicle Speed

4 Right Cards

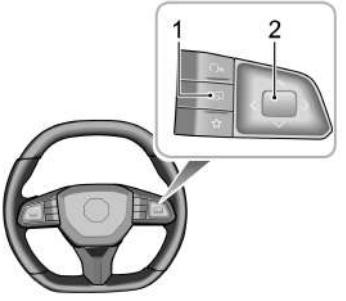

Card messages can be switched through the button (1) on the steering wheel.
Long press the square control button (2) on the right side of the steering wheel to reset the trip message/eliminate the warning message/switch the malfunction message.

5 Time

6 Battery Percentage

7 Driving Mode
Refer to the chapter 'Operating the Vehicle' for details.

8 Gear Display

9 Active Safety

10 Total Driving Range

11 Power System State

12 KERS Level

13 Fuel Gauge and Fuel Driving Range

Warning Message

The warning message is displayed on the instrument pack through the pop-up box, mainly including:

- Operation Instructions
- System State Prompts
- System Malfunction Alert

Please follow the text prompts or refer to relevant control system sections for the failure cause and appropriate solutions.

Warning Lamps and Indicators

When the vehicle is starting or traveling, if the warning lamps or indicators appear on the instrument pack, it indicates that the relevant system is in a certain state or is faulty. Some warning lamps illuminate or flash with warning tones or prompt messages.

Please carefully read the following instructions to understand the meaning of the relevant warning lamps and indicators. In case of a failure, please take corresponding measures in time and contact a local MG Authorised Repairer for service as soon as possible.

Name	Icon	Note
Dipped Beam Indicator		Dipped beam headlamp has been switched on.
Main Beam Indicator		Main beam headlamp has been switched on.
Intelligent High Beam Indicator*		The auto headlamp function has been enabled.
Side Lamp Indicator		Side lamps have been switched on.

Front Fog Lamp Indicator		Front fog lamps are on.
Rear Fog Lamp Indicator		Rear fog lamps are on.
Directional Indicator Lamp		When the left or right turn signal lamp flashes, the direction indicator lamp on the corresponding side also flashes. If the hazard warning lamps are turned on, both direction indicator lamps will flash simultaneously. If either direction indicator lamp in the instrument pack flashes very rapidly, it indicates the turn signal lamp on the corresponding side has a fault.
Airbag Warning Lamp		There is a failure in the SRS or seat belt. Stop the car as soon as safety permits, and turn off the Start switch. There may be a risk that the SRS system or the seat belts may not work properly should a crash occur.
Seat Belt Unfastened Warning Lamp		If this lamp illuminates or flashes, it indicates that the seat belt for an occupied front seat remains unfastened.

Tyre Pressure Monitoring System (TPMS) Warning Lamp		If this lamp illuminates, it indicates that the tyre pressure is low. Please check the tyre pressure. If this lamp flashes and then remains ON after a period of time, it indicates a fault within the system.
Electric Power Steering System (EPS) Warning Lamp		If this lamp illuminates, it indicates that the electric power steering system has a fault, and its performance is reduced. The vehicle can be driven for a short period of time. Please seek an MG Authorised Repairer immediately.
		If this lamp illuminates, it indicates that the electric power steering system has a fault relating to the steering angle. The vehicle can be driven for a short period of time. Please seek an MG Authorised Repairer immediately. If this lamp flashes, it indicates that the electric power steering system has a serious fault, drastically affecting the steering. Please stop the vehicle as soon as safety permits and seek an MG Authorised Repairer immediately.
Anti-theft System Warning Light		No valid key detected. Please use the correct key or place the smart key in the backup start position. Please refer to the 'Standby Starting Procedure' in the 'Driving the Vehicle' section for details.

Dynamic Stability Control/Traction Control System Warning Lamp		If this lamp illuminates, it indicates that the dynamic stability control system/traction control system has failed. If this lamp flashes while driving, it indicates that the system is operating to assist the driver.
Dynamic Stability Control/Traction Control System OFF Warning Lamp		The dynamic stability control/traction control system has been turned off.
Hill Descent Control (HDC) ON/Malfunction Indicator Lamp		If this lamp illuminates, it indicates that the HDC system has entered the Standby mode. If this lamp flashes, it indicates that the system is currently under the control of HDC.
		The HDC system has a fault.
AUTO HOLD System Status Indicator Lamp		The AUTO HOLD system is operating to assist the driver.

Electronic Parking Brake (EPB) System Status Indicator		If this lamp illuminates, it indicates that the EPB is enabled. If this lamp flashes, it indicates that the vehicle is parked on a slope with an excessive angle or the electronic parking brake system has failed, in which case please park the vehicle on a flat and safe road surface.
Electronic Parking Brake (EPB) System Malfunction Indicator Lamp		It indicates that the EPB system has a fault.
Brake System Malfunction Indicator Lamp		If the following brake system indicator illuminates, it indicates a serious fault with the brake system. Please stop the car as soon as safety permits and turn the vehicle OFF.
System fault information indicator light		The vehicle has warning messages; please go to the information center to check for fault information or important reminder messages. Refer to 'Instrument Pack' in this chapter.

Particulate Filter warning light*		Once the vehicle has been started, the following indicator will illuminate, illustrating that the particulate filter needs to be regenerated or is currently being regenerated. Once the vehicle has been started, the flashing indicator light illustrates that the particulate filter is saturated.
ABS Fault warning light		The anti lock braking system has malfunctioned. If the anti lock braking system malfunctions when driving, the anti lock braking system function will no longer operate. However, regular braking will still operate as normal.
Adaptive Suspension System Malfunction Warning Light		The adaptive suspension system has malfunctioned and can support brief driving. Please pull over as soon as safety permits and contact an MG Authorised Repairer immediately.
Low voltage battery charging system malfunction warning light		Once the vehicle has been started, if the indicator lamp illuminates it will convey a malfunction in the low voltage battery charging system. If the lamp flashes, it indicates that the low voltage battery is low. Please start the vehicle in a timely manner to allow it to charge.

Engine Coolant Temperature Warning Lamp		If this lamp illuminates, it indicates high engine coolant temperature, which could result in severe damage, in which case stop the car as soon as safety permits and turn off the Start switch. If this lamp flashes, it indicates that the engine coolant sensor has failed, in which case stop the car as soon as safety permits and turn off the vehicle.
Engine Malfunction Indicator Lamp		The vehicle has a fault that seriously affects the performance of the engine. Stop the car as soon as safety permits and turn off the vehicle.
Engine Emission Malfunction Indicator Lamp		If this lamp illuminates after the vehicle is started, it indicates an engine emissions malfunction and continued driving may result in damage to the catalytic converter. It is recommended to stop the vehicle and turn off the Start switch as soon as it is safe to do so. If this lamp flashes after the vehicle has been started, it indicates a severe engine misfire malfunction. Please stop the vehicle and turn off the Start switch as soon as it is safe to do so.

Low Oil Pressure Warning Lamp		If this lamp illuminates after the vehicle has been started, it indicates that the oil pressure is too low, which may result in severe engine damage. Stop the car as soon as safety permits and turn off the vehicle.
Low Fuel Warning Lamp		The low fuel warning lamp indicator will illuminate when the fuel in the tank is low. If possible, please refuel before the low fuel warning lamp has illuminated. When the fuel level continues to fall, the lamp will flash. Continued driving of the vehicle will cause the vehicle to stall due to fuel exhaustion. Please add fuel as soon as possible. If a sufficient amount of fuel has been added and the fuel level has risen above the alert limit but the lamp remains on, please contact an MG Authorised Repairer for service immediately.
Drive Power Restricted Indicator		The drive power is restricted.

Power Battery Malfunction Indicator Lamp		If this lamp illuminates, it indicates a severe fault with the power battery system. Please stop the vehicle as soon as safety permits, turn off the vehicle and contact an MG Authorised Repairer for repair immediately. If this lamp flashes, it indicates a thermal runaway fault with the power battery. Please stop the vehicle as soon as safety permits, turn off the vehicle, leave the vehicle immediately and contact an MG Authorised Repairer for repair.
		If this lamp illuminates, it indicates a general fault with the power battery system. Please contact an MG Authorised Repairer for repair as soon as possible.
Drive Motor Malfunction Indicator Lamp		If this light illuminates a fault has been detected with the drive motor system. Please stop the vehicle as soon as possible under safe conditions and seek assistance from an MG Authorised Repairer.
		If this lamp illuminates, it indicates a general fault with the motor system.
READY Indicator		The vehicle is in READY mode.

Power Battery Pack Low Battery Warning Lamp		If this lamp has illuminated, it indicates that the battery level of the power battery pack is low. Please charge it as soon as possible. If this lamp flashes, it indicates the battery level of the battery pack is severely low. Please charge it immediately.
Power System Malfunction Indicator Lamp		A fault has been detected in the power system and its functions have been limited.
		The power system has a severe fault, please stop the car as soon as safety permits and power off the vehicle.
Charging/Discharging Status Indicator		A fault has been detected when charging/discharging.
		The vehicle is currently charging/discharging.
		

Charging Connection Indicator Lamp		The charging gun is connected.
Constant Speed Cruise Control System Indicator*		The constant speed cruise control system is in Standby state. ***Note: For some models, this light is displayed in dark color in daytime mode.***
		The constant speed cruise control system has been activated.
Adaptive Cruise Control System Indicator*		The adaptive cruise control system has been activated and is not in the Standby state.
		The adaptive cruise control system is in the Standby state. ***Note: This lamp is dark in day mode on some models.***
		The adaptive cruise control system is activated.

Speed Limit Assistance System Indicator*		Manual speed limit assistance system is in Standby state. ***Note: This lamp is dark in day mode on some models.***
		If this lamp illuminates, it indicates that the manual speed limit assistance system is activated. If this lamp flashes, it indicates that the current speed is greater than the speed limit value.
		The intelligent speed limit assistance system is in Standby state. ***Note: This lamp is dark in day mode on some models.***
		The intelligent speed limit assistance system is activated.
Cruise/Speed Limit System Malfunction Indicator Lamp		The constant speed cruise control system, adaptive cruise control system or speed limit assistance system has a fault.
Speed Limit Sign Speed Indicator*		'NNN' indicates the speed limit sign speed currently identified. When the vehicle speed is greater than the speed limit value, the lamp will flash.

Speed limit sign accessory information warning light*		The currently recognised speed limit sign has attached information, please pay attention to it.
		The speed limit on the road sign has been recognised and the alarm sounder has been turned off. After a period of time, the alarm sounder icon will turn off and no longer be displayed in the lower left corner.
		The overspeed alarm and intelligent speed limit assist system are turned off simultaneously.
		Overspeed alarm fault.

Intelligent cruise assist system indicator light*		The intelligent cruise assist system is activated and has not entered the standby state.
		The intelligent cruise assist system has entered the standby state. ***Note: This lamp is dark in day mode on some models.***
		The intelligent cruise assist system has been activated.
		The intelligent cruise assist system has malfunctioned.
Lane Keeping Assist System Indicator*		If this indicator illuminates, it indicates that the lane keeping assist system is operating.
		If this indicator illuminates, it indicates that the lane keeping assist system has been switched off. When the system function has been switched on, if the indicator remains on, a malfunction has been detected within the system.

Forward Collision Assist System Indicator*		If this lamp illuminates, it indicates any function of the forward collision assist system has been disabled. When the functions of the forward collision assist system are fully enabled, if the lamp remains on, it indicates that the forward collision assist system has a fault and cannot operate as normal.
Rearward Driver Assistance System Indicator*		The rearward driver assistance system is OFF, has failed or is unavailable.
Emergency call indicator light*		The system is ready and is performing an emergency call service.
		The emergency call system can send vehicle information to the call center but other functions are limited due to system errors.
		The emergency call system has malfunctioned and cannot be operated.
Trailer malfunction warning light*		The trailer has malfunctioned.

Lights and Switches

Master Light Switch



AUTO	AUTO Lamp
	Side Lamp and Switch Backlights
	Headlamp
OFF	AUTO Lamp Off

AUTO Lamp

The AUTO lighting system is active by default (position 1). The system will automatically switch the low beams, side lamps and switch backlights on and off according to the intensity of current ambient light.

Note: The implementation of this feature is due to the installation of a sensor in your car that can monitor real-time external lighting conditions. It is installed on the base of the interior rearview mirror. Please do not block or cover this area at will, otherwise the headlights may automatically turn on when unnecessary.

Side Lamp/Switch Backlights

Turn the master light switch to position 2 to switch on the side lamps and switch backlights.

With the Start switch in the OFF position, if the side lamps are on and the driver's door is open, an audible alarm will sound. The instrument pacl will display 'Please Turn Off Lamps' .

Headlamp

Turn the master light switch to position 3 to switch on the low beam headlamps, side lamps and switch backlights.

AUTO Lamp Off

Turn the master light switch to position 4 to turn off the AUTO lamp. When released, the switch automatically returns to position 1 .

Daytime Running Lamp

The daytime running lamps turn on automatically. When the low beam is turned on, the daytime running lamp goes out automatically.

Daytime running lamp mode can be set on the entertainment display.

Note: The daytime running lamp will not be illuminated when the vehicle is in P gear.

Welcome Light

When the vehicle is unlocked, the system will automatically turn on the corresponding exterior lights to show the welcome effects. The welcome light function can be set in the vehicle settings interface on the entertainment display.

Follow Me Home

After the vehicle is powered off, pull the light lever towards the steering wheel. The follow me home function is enabled. The system will automatically turn on the corresponding exterior lights for a period of time to illuminate your way home.

Touch Panel Switch of Instrument Panel

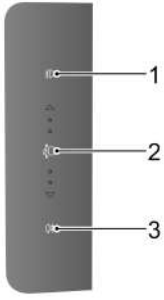

1 Front Fog Lamp Switch*

2 Headlamp Levelling Switch

3 Rear Fog Lamp Switch

Front Fog Lamp*

When the low beams on, click the front fog lamp switch to turn on the front fog lamps.

Headlamp Levelling

Click the upper and lower areas of the headlamp levelling switch to adjust the headlamp levelling. The number of illuminated dots represents the corresponding lighting height for different loads.

The headlamp levelling can be adjusted as per the following table according to the vehicle load.

Illustration	Applicable Operating Conditions
	Driver only, or driver & front passenger.
	All the seats occupied with no load in the boot.

Illustration	Applicable Operating Conditions
	All the seats occupied with load in the boot.
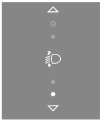	Driver only with load in the boot.

Note: When there is a load in the loadspace, try to ensure that the cargo is evenly distributed.

Rear Fog Lamp

When the low beams or front fog lamps have been switched on, click the rear fog lamp switch to turn on the rear fog lamps.

Switching between High Beam and Low Beam

Take care not to dazzle oncoming vehicles when switching between the main and dipped beams.

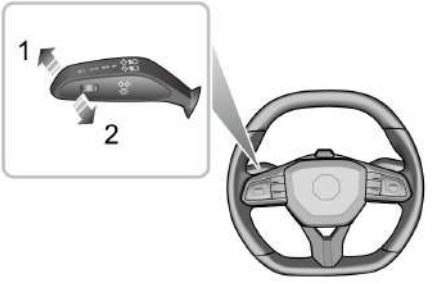

Manual switching between High Beam and Low Beam Headlamps

When the low beam headlamps illuminate, push the light lever (1) towards the instrument panel to turn on the high beams. The high beam indicator on the

instrument pack will illuminate. Push or pull the light lever (1 or 2) once again to switch to low beams.

High Beam Flash

To briefly flash the high beam, pull the lever (2) towards the steering wheel and release it several times.

Smart High Beam System

The Automatic High Beam serves only as an auxiliary function. The driver must check the status of the front lamps and turn on the front lamps when necessary.

The Automatic High Beam function may not operate normally in the following cases, operation is not limited to the following and so the main and dipped beams should be switched manually:

- ***The windscreen is dirty, broken or obstructed by other objects blocking the view of the sensor.***
- ***The headlamps of other vehicles are obstructed or blocked and cannot be detected.***
- ***When pedestrians, non-motor vehicles and other objects with no obvious light or reflected light are encountered.***
- ***When the headlamps and tail lamps of other vehicles cannot be detected due to the sensor view being impaired due to undulating road conditions such as bends, dips or hills.***
- ***When the car is driving on a winding road or mountainous road.***
- ***The wiper switch is in the 'Fast Wipe' position.***

Smart high beam system can detect the light intensity of the vehicle ahead by the front view camera. The high beams can be turned on or off once certain conditions are met. When the smart high beam system is enabled, the smart high beam indicator on the instrument pack will illuminate. The function can be turned on and off through the entertainment display.

When the headlights are automatically controlled, in dark environments and with no vehicles detected in the surroundings, the system will turn on the high beams.

When the lighting changes from dark to bright and the system detects the headlamps or tail lamps ahead, the system will turn off the high beams.

To enable the smart high beam system, the following conditions should be met:

1 The light lever switch is placed in the 'AUTO' position and the low beams should automatically turn on.

2 The vehicle is in operation with the speed exceeding 24.9 mph (40km/h) .

3 The front fog lights* are not turned on.

The smart high beam system will automatically stop when the following conditions are met:

- When the smart high beam system is enabled and the low beams are automatically switched on, manually switch to high beams.
- When the smart high beam system is enabled and the high beams are automatically switched on, manually switch to low beam headlights.
- When the smart high beam system is enabled and the high beams are automatically switched on, toggle the high beam switch.

Once the system has been exited, quickly pushing the high beam level 'ON' twice towards the instrument panel will enter the smart high beam system again. This feature can only be turned off three times in a start cycle. If it is exited more than three times, the feature will not be enabled again the current start cycle.

IMPORTANT
The Automatic High Beam function uses data from the front view camera, always keep the windscreen clean and free from residue in this area to maintain optimum performance of this system. Any damage in this area such as stone chips must be repaired at the earliest convenience.

Turn Signal Lamp

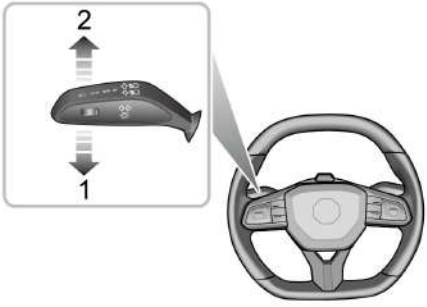

Push the light lever downward (1) to turn on the left turn signal lamp; push the lever upward (2) to turn on the right turn signal lamp. The corresponding GREEN indicator in the instrument pack will flash when the turn signal lamps are working.

Once the steering wheel has been returned back to center, the indicator lever will automatically reset and the turn signal lamps will go off. If the steering wheel

angle is small, you will need to manually reset the indicator lever to turn off the turn signal lamps. If the light lever switch is moved at a small angle, the indicator lamps will flash three times and then turn off automatically.

Hazard Warning Lamp

Press the hazard warning lamp button ⚠ on the instrument panel to operate the hazard warning lamps. All turn signal lamps and direction indicator lamps will flash together. Press the button again to switch off the hazard warning lamp. All turn signal lamps and direction indicator lamps will stop flashing.

Wipers and Washers

Front Windscreen Wiper and Washer Operation

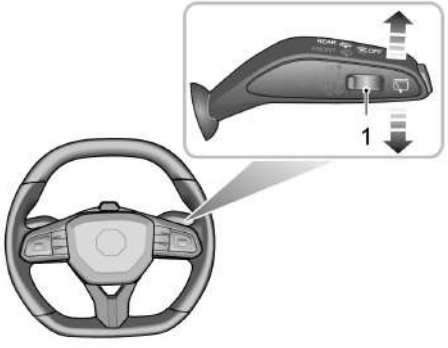

- AUTO: Automatic wipe
- LO: Slow speed wipe
- HI: Fast speed wipe
- OFF : Turn Wipers Off (Default Position)
- 1x: Single wipe

Automatic wipe

Pushing the lever up to the automatic position (AUTO), the wipers will then automatically operate.

Toggle the automatic wiper speed adjustment switch (1) to adjust the sensitivity of the rain sensor. As the sensitivity increases, the wiping interval decreases. The rain sensor is equipped in the interior rearview mirror base to detect varying amounts of water outside of the windscreen. The vehicle will adjust the wiping speed according to the signals provided by the rain sensor when automatic wiping has been switched on.

Note: When increasing the sensitivity of the rain sensor, the wiper will operate once immediately; if the rain sensor detects continuous rainwater, the wiper will keep working. When no rain is detected, it is recommended to switch off the automatic wipe.

Slow speed wipe

By pushing the lever up to the slow speed wipe position (LO), the wipers will operate slowly.

Fast speed wipe

Push the wiper stalk to the fast speed wipe position (HI). This will allow the wipers to operate a fast speed.

Single wipe

Pressing the lever down to the single wipe position (1x) and releasing will operate a single wipe. If the lever is held in the single wipe position (1x), the wiper will operate continuously until the lever is released.

Note: When the car is stationary, if the bonnet is opened, the front wiper/washer operation will be disabled.

IMPORTANT

- Avoid operating the wipers on a dry windscreen.
- In freezing or extremely hot conditions, make sure that the wiper blades are not frozen or adhered to the windscreen.
- In winter, remove snow or ice from around the wiper arms and blades, including the wiped area of the screen.

Wash and wipe

Pulling the lever toward the steering wheel will operate the front windscreen washers. After a short delay, the wipers will commence operating in conjunction with the washers.

Note: The wipers continue operating for three wipes after the lever switch is released. After several seconds, there will be a further wipe to remove any washer fluid from the windscreen.

IMPORTANT

If the washers fail to deliver the screen wash solution (dirt or ice may have blocked the jets), release the lever immediately. This will prevent the wipers from operating and the consequent risk of visibility being impaired by dirt smearing across the unwashed windscreen.

Rear Window Wiper and Washer Operation

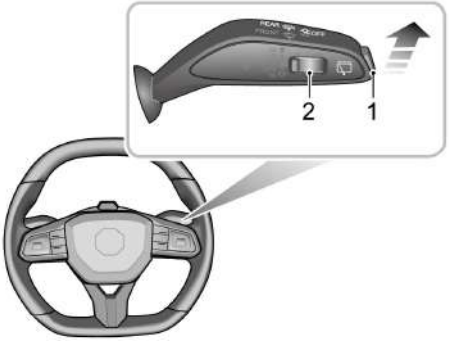

Intermittent Wipe

Press and release the intermittent wipe button (1), so that the wiper will wipe three times immediately and then wipe intermittently. Press the intermittent wipe button again to turn off the intermittent wipe. Toggle the automatic wiper speed adjustment switch (2) to adjust the intermittent wipe interval.

Wash and wipe

Pushing the lever toward the instrument panel will operate the rear window washers.

The wipers continue operating for a further three wipes after the lever is released. After several seconds, there will be a further wipe to remove any fluid draining down the screen.

Note: When the tail gate is opened, rear wiper operations will be disabled.

Note: If the windscreen wipers are switched on and Reverse (R) gear is selected, the rear wiper will operate.

Horn



Press the horn button area on the steering wheel (as indicated by the arrow) to operate the horn.

Note: The vehicle horn button areas and the driver's airbag are located in close proximity on the steering wheel. The illustration shows the position of the horn (indicated by the arrows). Please ensure that you press in this area to avoid any potential conflict with the operation of the airbag.

IMPORTANT
To avoid possible SRS issues, please do not press with excessive force or hit the airbag cover when operating the horn.

Rearview Mirors

The rearview mirrors consist of exterior rearview mirrors. These are located on either side of the car. There is also an interior rearview mirror in the front of the passenger compartment. The mirrors are used to reflect the situations behind or on both sides of the vehicle, expanding the driver's view.

The rearview mirrors are safety-critical parts. Proper use and reasonable mirror angle adjustment can improve the driver's safety and comfort.

Exterior Rearview Mirrors

The exterior rearview mirrors are extremely vulnerable in the event of a collisionThe exterior rearview mirrors feature a manual or electric folding function; this feature can be utilised to avoid damage and when manoeuvring through narrow passages.

In addition to the folding function, each exterior rearview mirror features electric angle adjustment and heating elements, which can effectively remove frost or mist on the mirror.

Note: The vehicles or objects behind viewed the exterior rearview mirrors may appear further away than they actually are.

Power Folding Mirror

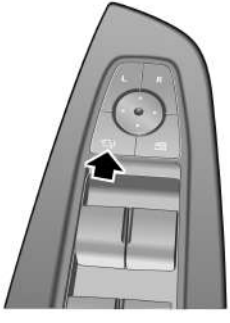

Press the button (arrowed) on the combination switch on the driver's side will electrically fold the exterior rearview mirror. Pushing the button again will return the mirrors to their original position.

While unlocking/locking the vehicle, the exterior rearview mirrors will be deployed/folded automatically. This function can be set in the relevant interface in 'Vehicle Settings' on the entertainment display

Note: For vehicles equipped with electrically folding door mirrors, if the mirrors have been moved from their positions manually or accidentally, they can be reset by operating the switch to completely fold the mirrors and deploy them to their correct position.

Electric Adjustment of Exterior Rearview Mirrors

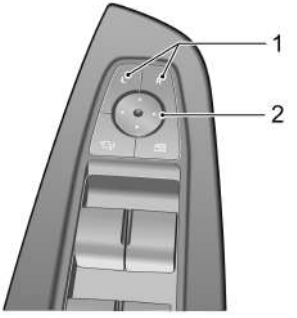

- Press the left (L) or right (R) switch (1) to select the left or right exterior rearview mirror. Meanwhile, the indicators on the selected switch will illuminate.
- Gently press 4 arrows of the circular switch (2) to adjust the angle of the selected exterior rearview mirror.

- Press the L or R switch (1) again, the corresponding indicator will extinguish. The mirror adjustment operation can be halted to avoid accidental adjustment of the current angle of the mirror.

Note: The mirror angle memory function is equipped in some models and can be set with the seat position memory function, which not only reflects the driver's personalisation settings, but also improves the driving convenience. Refer to the 'Seats and Restraints' section for relevant content.

Reverse Mirror Tilt Function*

To facilitate the driver to see the rear wheels and the road surface behind the vehicle when reversing, some models are provided with the rearview mirror angle downtilt memory function when reversing. This function of the corresponding side can be turned on or off on the entertainment display.

The mirror downtilt angle when reversing can be set through the following operations:

- Start the power system and shift into R gear;
- Adjust the rearview mirrors on both sides to tilt them down to a suitable angle;
- Stop reversing and place the vehicle into the Drive gear (D), Neutral (N) or Park (P).

Note: When reversing, if a new adjustment is made to the angle of the mirror tilt and the vehicle is then moved out of reverse. The new angle will be automatically memorised when reversing.

Mirror Glass Heating

The exterior rearview mirrors have integral heating elements which can disperse frost or mist from the glass.

The heating function of the mirror glass occurs in conjunction with the heated rear window but only when the power system has been started and the heated rear window is turned on.

IMPORTANT

- The electric folding and adjustments of the electric mirrors are operated via the interior switch. Folding mirrors directly by hand may damage the related devices.
- Direct injection of the high pressure water when washing the vehicle may also damage the electric mirror functions.

Interior Rearview Mirrors

Adjust the body of the interior rearview mirror to achieve the best possible view. The anti-dazzle function of the interior rearview mirror can reduce glare caused by headlamps of vehicles behind at night.

Manual Anti-dazzle Interior Rearview Mirror*



Move the lever at the base of the interior rearview mirror to change its angle, so as to utilise the anti-dazzle function. Normal visibility is restored by pulling the lever back again.

Note: In some circumstances, the view reflected in a 'dipped' manual mirror can confuse the driver as to the precise location of following vehicles.

Automatic Anti-dazzle Interior Rearview Mirror*



When the vehicle is powered on, the anti-dazzle function will be switched on automatically if the headlamps of vehicles behind could dazzle the driver.

The automatic anti-dazzle function cannot be activated properly in the following situations:

- The lights of the following vehicle can not directly reach the light sensor.
- R gear is selected.

Note: Attaching film on the rear window may have influences on the usage of the automatic anti-dazzle function.

Sunvisor

For driving safety, the vanity mirror on the driver side should only be used when the car is stationary.

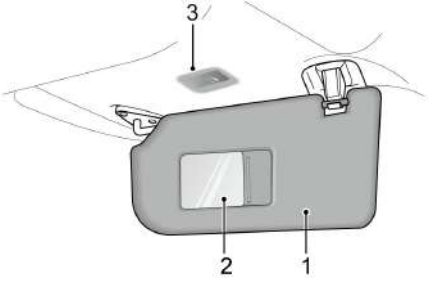

Sunvisor (1), vanity mirror (2) and vanity mirror light (3) are arranged on the roof ahead of both the driver and the front passenger.

Pull the sunvisor downward to use the vanity mirror. A vanity mirror light is switched on when the cover is opened and it is switched off when the cover is closed.

The vanity mirror light can only be used when the sun visor is in the starting position of the pivot.

Windows

Please correctly operate the windows to avoid injury or harm. The driver should ensure passengers operate the windows in a safe manner.

Ensure children are kept clear when raising or lowering a window.

DO NOT operate the power window controls continuously in a short time frame, otherwise the power window controls may be disabled to protect the motor. If this occurs, please wait a few seconds until the motor cools down. Do not disconnect the negative battery during this time.

Power Operated Window Switch

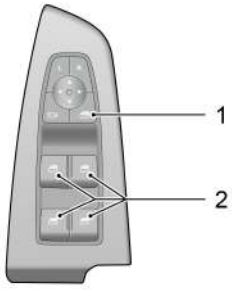

1 Rear Window Disable Switch

2 Window Control Switch

When the Start switch is in the 'ACC/ON/READY' position , the power window can be operated (doors should be closed).

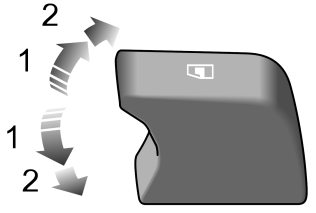

Press or pull the window control switch to position 1 (figure 1) and the window will go up or down. Release the switch, and the window will stop moving. Press or pull the window control switch to position 2 (figure 2). The window will automatically rise/go down until it is fully opened or closed. When the automatic window is being operated, pressing the switch again will stop the movement of the window.

Press the driver's side rear window disable switch to disable the rear window control, press again to restore control.

Note: The front and rear windows can also be controlled using the window switches on their respective doors. If the rear window disable switch on the driver's door is activated, the window control switch on the rear door will not function.

'Anti-pinch' Function

All windows of this car are equipped with an 'anti-pinch' function. When the window automatically rises and detects an obstacle, the window will stop and automatically descend a certain distance to prevent injury to passengers or other objects.

'Lazy Lock' Function

'Lazy Lock' function can open or close the windows from outside.

When the Start switch is in the OFF position and the doors are closed, long press the remote key unlock button for several seconds till the window begins to open the window; press and hold the lock button on the remote key for several seconds till the window starts to close.

Note: If the battery has been de-energised during the window lifting and lowering process, the one touch up and anti-pinch function will be suspended. Once the battery has been energised again, fully close the window, ensuring the window lift switch is continuously held for approximately 2 seconds, once this has been done, open the window completely ensuring the window lift switch is held for approximately 2 seconds. Repeat this process and the 'one touch' and 'anti-pinch' mode will be restored.

Sunroof

The sunroof assembly includes the glass sunroof and the power sunshade. The glass sunroof consists of the moving glass at the front and the fixed glass at the rear, which provides better ventilation and light transmission, relieves head compression for front and rear passengers and improves ride comfort.

Instructions for Use

Please operate the sunroof correctly to avoid danger. The driver shall instruct the occupants on the use of the sunroof and safety precautions.

If there are children in the vehicle, ALWAYS turn off the Start switch when temporarily leaving the vehicle - to prevent children from accidentally operating the sunroof and causing injury or harm.

DO NOT allow passengers to lean out of an open sunroof whilst the vehicle is in motion. Injuries may occur from objects such as tree branches.

Safety of the vehicle occupants must be observed at all times. DO NOT allow limbs to be placed in the moving path of the sunroof at any time as this may result in injury or harm.

Note: DO NOT place heavy objects on or around the sunroof.

- Do not open the sunroof in poor weather conditions;
- Do not open the sunroof when the vehicle is traveling at high speeds;
- Open the sunroof only after draining off the water on the sunroof glass, otherwise water may leak onto the sunroof or in the car;
- When the sunroof glass freezes, turn on the heater and wait for the ice to melt before opening the sunroof; otherwise, it may lead to cracked seals or damage occuring to the motor.

- Frequently lubricate and clean the sunroof mechanism and water drainage groove;
- Clean the glass with cleaning solvents such as alcohol;
- Once the sunroof has been completely opened/closed, release the switch in time.

Sunroof Operation

When the Start switch is in the ACC or ON/RUNNING position, the sunroof can be operated.

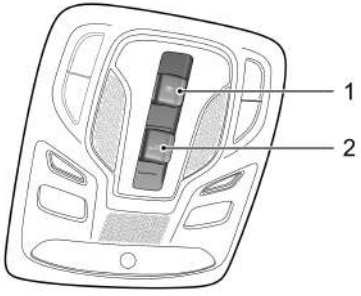

The sunroof switch is located on the ceiling above the front windscreen. The opening methods of sunroof can be identified according to the switch symbols. Switch 1 will be used to operate the power sunroof

sunshade and switch 2 will be used to operate the sunroof glass.

Sunroof Glass Operation

Tilt Open

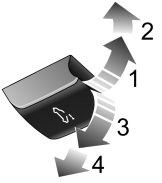

Push up the sunroof glass switch to the 1st position (1) and hold, the sunroof will be manually tilted. Sunroof movement can be stopped at any time by releasing the switch. Push up the glass switch to the 2nd position (2) and then release, the sunroof will completely open automatically.

Close by Tilting

Pull down the sunroof glass switch to the 1st position (3) and hold, the sunroof will manually close. Sunroof movement can be stopped at any time by releasing the switch. Pull down the glass switch to the 2nd position (4) and then release, the sunroof will automatically close.

Slide Open



Push the sunroof glass switch backward to the 1st position (3) and hold, the sunroof will be manually opened by sliding. Sunroof movement can be stopped at any time by releasing the switch. Push the glass switch backward to the 2nd position (4) and then release, the sunroof will be opened

automatically. Sunroof movement can be stopped at any time by pushing the switch backwards again.

Close by Sliding

Push the sunroof glass switch forward to the 1st position (1) and hold, the sunroof will close manually. Sunroof movement can be stopped at any time by releasing the switch. Push the glass switch forward to the 2nd position (2) and then release, the sunroof will close automatically. Sunroof movement can be stopped at any time by pushing the switch frontwards again.

Sunroof Sunshade Operation



Open

Push the sunshade switch backward to the 1st position (3) and hold, the sunshade will slide open manually. You can stop the movement of the sunshade at any time by releasing the switch. Push the sunshade switch backward to the 2nd position (4) and then release, the sunshade will open to the end automatically. You can stop the movement of the sunshade at any time by pushing the switch backward again.

OFF

Push the sunshade switch forward to the 1st position (1) and hold, the sunshade will close manually. You can stop the movement of the sunshade at any time by releasing the switch. Push the sunshade switch forward to the 2nd position (2) and then release, the sunshade will close completely. You can stop the movement of the sunshade at any time by pushing the switch forward again.

"Anti-Pinch" Function

During the closing operation, the sunroof glass and sunshade will stop closing and will open automatically when the closing resistance is increasing due to an obstacle, extreme weather (i.e, temperature below -20℃) or other causes, so as to reduce the impact on the obstacle and protect the sunroof movement mechanism.

Forcibly Close the Sunroof Glass

To forcibly close the sunroof glass which may have been reopened due to the activation of the anti-pinch function; slide the glass switch forward to the 1st position and hold it until the sunroof glass is fully closed. Please note that the anti-pinch function is not available when forcibly closing the sunroof glass.

Forcibly Close the Sunshade

To forcibly close the sunshade reopened due to activation of anti-pinch function in a particular case: slide the sunshade switch forward to the 1st position and hold it until the sunshade is fully closed. Please note that the anti-pinch function is not available when forcibly closing the sunshade.

Linkage between Sunshade and Sunroof Glass

To prevent the sunshade from being exposed, the sunshade will move together when the sunroof glass is opened. To close the sunshade, please close the sunroof glass first.

Sunroof Initialisation

Sunroof operation will be affected by power failure when the sunroof glass or sunshade is in motion. It is necessary to initialise the sunroof after powering on.

Glass initialisation: fully close the glass, push the sunroof glass switch forward to the 2nd position and hold it for about 10 seconds, the glass will start vibrating, accompanied with 'clicking' sounds and then automatically open slide the sunroof open for a distance during which the switch must be kept in the 2nd position and then close the sunroof.

Sunshade initialisation: fully close the sunshade, push the sunshade switch forward to the 2nd position and hold it for about 10 seconds, the sunshade will start vibrating, accompanied with 'clicking' sounds and then automatically open slide the sunroof open for a distance during which the switch must be kept in the 2nd position and then close the sunroof.

Thermal Protection

To prevent the sunroof glass motor and sunshade motor from damage due to overheating, they are provided with a thermal protection function.

It is not possible to carry out any operation other than closing in the thermal protection state.

'Lazy Lock' Function

The 'Lazy Lock' function allows the sunroof glass and sunshade to be opened or closed from outside.

When the Start switch is in the 'OFF' position, press the remote key unlock button for several seconds till the sunroof glass and sunshade start to slide, keep the button held till the sunroof glass and sunshade have completely opened. Press the remote key lock button for several seconds till the sunroof glass and sunshade start to slide, keep the button held till the sunroof glass and sunshade have completely closed.

Interior Lighting

Front Interior Lamp

The front interior lamp is located on the overhead console above the front windscreen.

Depending on the configurations, the roof console style may differ, however, the shape of the reading light will remain consistent.

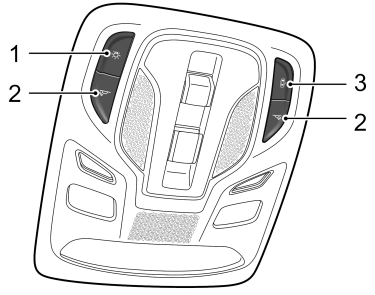

1 Front/Rear Interior Lamp Manual Control Master Switch

2 Interior Lamp Manual Control Switch on the Corresponding Side

3 Auto Control Switch

Press the master switch (1) to turn on the front and rear interior lamps simultaneously, press the switch again to turn them off.

Press one of the switches (2) to turn on a front interior lamp of the corresponding side, press the switch again to turn off the lamp.

In addition to the manual switch control of the interior lamps, the vehicle is provided with an automatic control function. Press the switch (3) to enable/disable the function.

When the automatic control function is enabled, the front and rear interior lamps will turn on automatically whenever the following scenarios occur:

- The car is unlocked;
- Any door is opened;

- When the light sensor of the vehicle detects that the ambient light is dark/or the side lamp has illuminated/or the side lamp turns off for 30s, switch off the Start switch.

Note: Under normal circumstances, if a door is left open for longer than a certain time, the front and rear interior lamps will go off automatically. In case of low battery, the front and rear interior lights will extinguish in advance.

Second-row Interior Lamps



The second-row interior lamps are located on the left and right sides of the roof. Press the switch as arrowed to turn on the lamps, press it again to switch off the lamps.

Third-row Interior Lamps



The third-row interior lamps are located in the middle position behind the roof. Press one of the switches as illustrated to turn on the corresponding rear interior lamp, press it again to turn it off.

Power Socket

Using the power socket or USB port when the vehicle is not started will cause premature discharging of the vehicle battery and prolonged use may cause a flat battery, meaning the vehicle cannot be started.

Front Console Power Socket

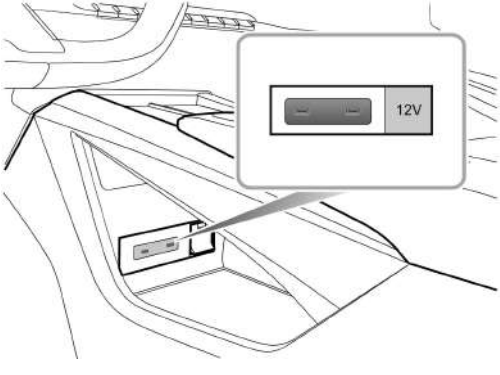

The front console power socket is located under the front of the centre console. The maximum working voltage is 12V, and the maximum power is 120W. When the Start switch is in the ACC/ON/READY position , open the cover allowing you access to use it as a power supply.

The front USB port is located under the front of the centre console. When the Start switch is in ACC/ON/READY position, the USB port can supply 5 V as the power interface. Maximum current 2.4A.

Loadspace Power Socket

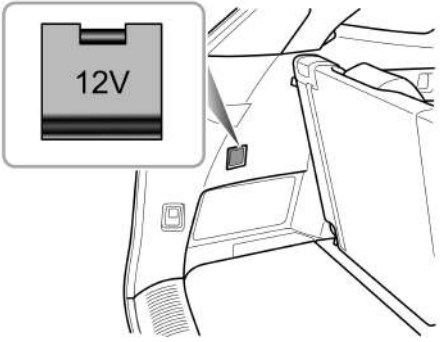

A power socket is located in the left side of the loadspace. The maximum working voltage is 12V, and the maximum power is 120W. When the Start switch is in the ACC/ON/READY position, open the cover to gain access to use it as a power supply.

Second-row USB Port

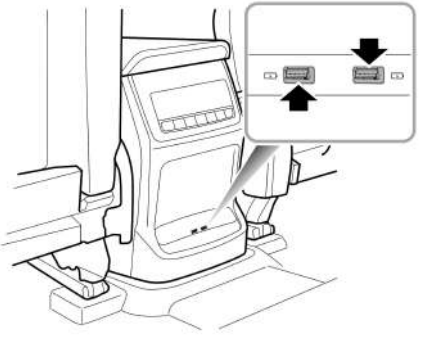

There are also two USB ports equipped at the rear of the centre console. When the Start switch is in the ACC/ON/READY position, the USB port can supply 5V voltage as the power interface. Its maximum operating current is 2.4 A.

Third row USB port

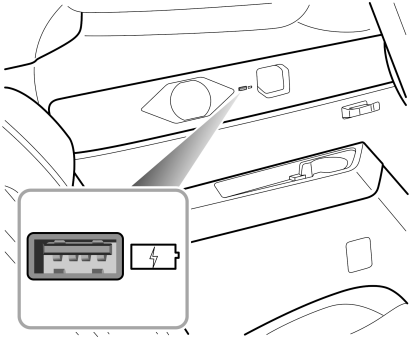

There is also one USB port located on the third row left decorative panel. When the start switch is in the ACC/ON/READY position, the USB port can supply 5V voltage as the power interface. Its maximum operating current is 2.4 A.

Note: The vehicle's USB ports may not support some fast charging devices.

Wireless Charging System for Mobile Phones*

The wireless charging function allows the user to charge their phone without the need if a wired connection; this is done through electromagnetic induction.

Note: It only works with mobile phones certified to the WPC Qi standard.

Wireless Charging of Mobile Phones

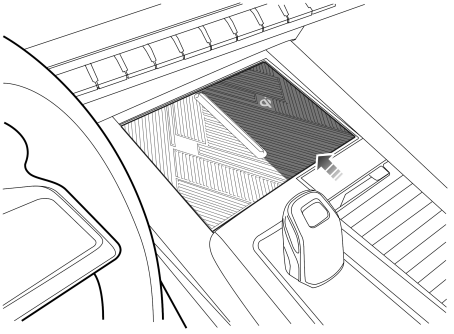

The mobile phone wireless charging area is located in front of the shift lever and the charging function can be used when the vehicle is in the ACC/ON/READY position. Place the mobile phone right side up with the back attaching to the charging area to enable the wireless charging function.

Note: Only one mobile phone can be charged at a time.

Note: On bumpy roads, the wireless charging function for the mobile phone may intermittently stop and resume. If the mobile phone deviates from the charging area and stops charging, it will need to be placed back in the charging area.

Note: The size of each brand of mobile phone is different, and the position of the charging coil on the mobile phone is different. Please adjust the position of the mobile phone accordingly. In addition, the case of some mobile phones may have an impact on wireless charging. It may be necessary to adjust or remove the case to achieve wireless charging.

Note: The charging rates vary with different models of mobile phones.

If the mobile phone cannot be charged properly, please make sure that there is no foreign matter in the wireless charging area or wait for the wireless

charging area to cool down before further attempt. If it still fails, contact an MG Authorised Repairer.

IMPORTANT
When the wireless charging system is in operation, ensure the smart key remains at least 20 centimeters away from the wireless charging area. Do not place IC cards, metal keys, or other items containing significant metal components in the wireless charging area alongside your phone. Doing so may cause the wireless charging function to malfunction or even lead to abnormal overheating, potentially resulting in safety incidents.

Storage Devices

Instructions for Use

- Please close all storage devices when the vehicle is in motion, to avoid personal injuries in cases of a harsh acceleration, emergency braking and a car accident during driving.
- Do not place flammable materials such as liquid or lighters in any storage devices to avoid heat in hot conditions from igniting flammable materials, leading to a fire.

Glove Box

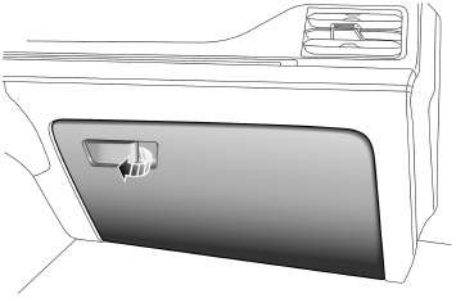

Pull the handle to open the glove box.

Push the lid forward to close the glove box. Make sure the glove box is fully closed when the vehicle is driving.

Storage Box

Driver Side Storage Box

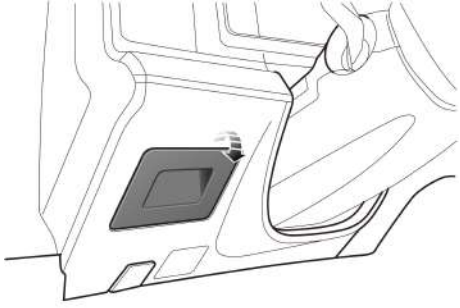

Located beneath the instrument panel on the driver side, pull the storage box lid down to open the box. The storage box can be closed by pushing the storage box cover forwards.

Centre Console Front Storage Box

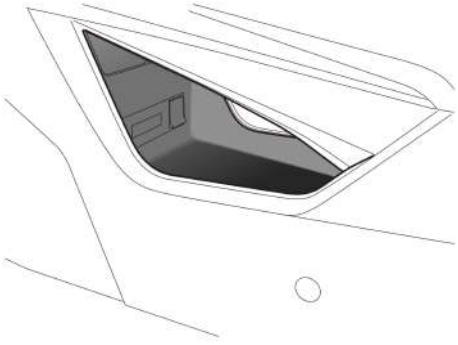

The centre console front storage box is located below the shift lever.

Centre Console Armrest Box

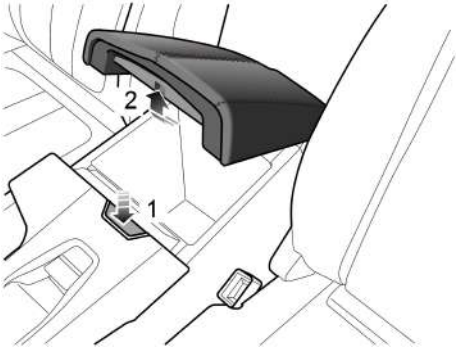

Pressing the centre console armrest switch (1) will release the stopper and lifting the centre console armrest (2) will open the centre console armrest box. Exert little force to put down the centre console armrest to close the centre console armrest box.

Cup Holder

Do not place hot drinks in the cup holder whilst driving. A spillage could result in scalding or other damage.

Centre Console Cup Holder

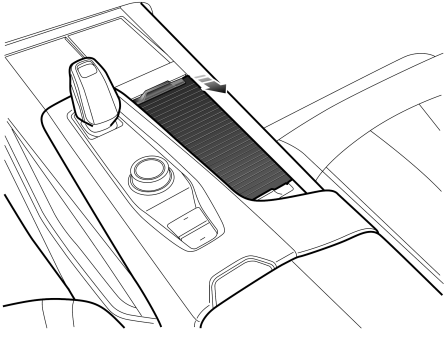

The centre console cup holder is located in the front of the centre console armrest assembly, and is used to hold a cup or beverage bottle.

Second-row Armrest and Cup Holder

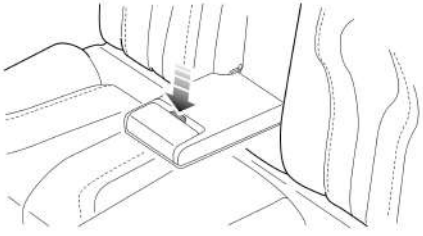

The second row armrest and cup holder are hidden in the middle position of the second row seat backrest. Pull out the armrest forward to open it and press the button to open the cup holder.

Third-row Cup Holder and Storage Box

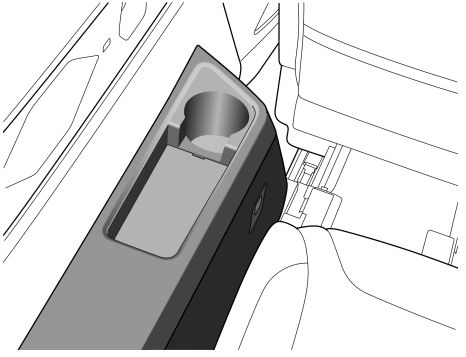

The cup holders and storage boxes are provided on both sides of the third-row seat, which are used to place beverage bottle and small objects respectively.

IMPORTANT
Please place sealable cups or beverage bottles in the cup holder. Otherwise, the beverage may be spilled and cause damage to the equipment inside the car.

Preparations for Trip

Key	*108*
Anti-theft Systems	*113*
Tailgate	*118*
Load Carrying	*123*
Towing	*124*
Fuel system	*127*
Steering System	*131*
*Alcolock**	*133*

Key

overview

Please keep the spare key in a safe place - not in the car!

It is recommended that spare keys are not kept on the same key ring, since this may cause interference and prevent correct key recognition and therefore prevent the correct operation of the vehicle power system.

The smart key contains delicate circuits and must be protected from impact, high temperature, humidity, direct sunlight and fluid corrosion.



WARNING

The keys of this vehicle contain coin/button batteries. The battery is HAZARDOUS and MUST be kept away from children (whether the battery is new or used).



WARNING

A lithium coin / button battery can cause SEVERE or FATAL injuries within 2 hours or less if it is swallowed or placed inside any part of the body.



WARNING

If you think batteries may have been swallowed or placed inside any part of the body, please seek medical advice immediately.

We provide you with smart keys, They are capable of unlocking all the locks of the vehicle. The smart keys come with a spare mechanical key, It can be used to mechanically unlock the door in an emergency.

The keys provided to you have been programmed for the security system on your vehicle. The vehicle cannot be started without a key programmed for your vehicle.

The smart key only works within a certain range. Please note that its operating range is sometimes affected by the battery level of the key, The influence of physical and geographical factors. For security reasons, After you lock the door, Please check to see if the operation is successful.

Key

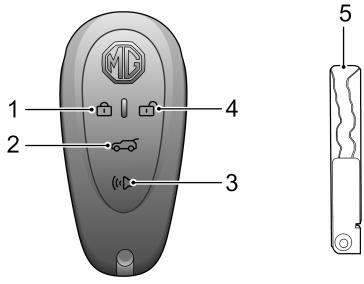

1 Locking button

2 Tailgate button

3 Find My Car button

4 Unlocking button

5 Mechanical spare key

If you lose your keys/Stolen or damaged, It is recommended to contact your local authorized after-sales service center immediately for a replacement. A lost/stolen key can be deactivated from starting the power system. If the key is recovered, It can be reactivated by an MG after-sales service center.

Note: Any key made privately may not start the vehicle and may affect the safety of your car. To obtain a suitable key replacement, it is recommended that you consult an MG Authorised Repairer.

Note: The new key cannot be offered to you immediately because it requires programming to the vehicle by the MG Authorised Repairer.

Note: If your car is equipped with the induction-type wireless charging function, always keep the key more than 20 cm away from the mobile phone which is being charged to prevent the key from interfering with the wireless charging device.

Note: Avoid operating the smart key close to strong radio interference devices (such as notebook computers and other electronic devices), the normal function of the key may be affected.

Replace the Smart Key Battery

In the following cases, please replace the smart key battery:

- The smart key operational range is significantly reduced ;
- 'If the key battery is low, please replace the battery' is displayed in the instrument pack.

Replace the Smart Key Battery

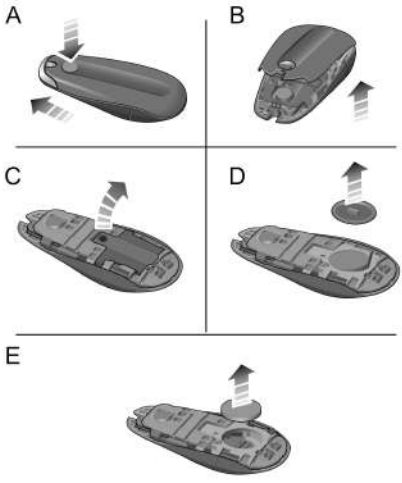

1 Press and hold the mechanical button (do not release) and simultaneously remove the key handle (A).

2 Release and open the lower cover in an upwards direction (B).

3 Using a suitable screwdriver, remove the screws and use a suitable flat bladed tool to pry open the battery cover (C).

4 Remove the battery pad (D).

5 Remove the old battery from the slot (E).

6 Place the new battery in the slot, Make sure the battery is correctly located.
Note: Make sure that the polarity of battery is correct (positive side downwards).
Note: It is recommended to use a CR2032 battery for the remote key.

7 Attach the battery waterproof pad.

8 Attach the battery cover and tighten the screws.

9 Install the lower cover, press the cover firmly to ensure correct location and press the key handle. Ensure the gap around the key is even.

10 Test the key for correct operation.

IMPORTANT
• Use of an incorrect or inappropriate battery may damage the smart key. The new battery's rated voltage, sizes and specifications must be the same as the old one. • Incorrect fitting of the battery may damage the key. • Disposal of the used battery must be strictly in accordance with relevant environmental protection acts.

Anti-theft Systems

Your vehicle is fitted with a power immobiliser and body anti-theft system. To ensure maximum safety and operation convenience, we strongly recommend you to read this section carefully to fully understand the activation and deactivation of anti-theft systems.

Power Immobiliser

Power immobiliser is designed to safeguard the vehicle from theft. The vehicle cannot be started until the immobiliser is deactivated.

If the instrument displays 'Smart Key Not Found' or 'Please Put the Key in Alternative Starting Position' or the immobiliser warning lamp illuminates, please put the smart key in the standby starting position (refer to 'Standby Starting Procedure' in 'Starting and Stopping the Power System' in 'Drive the Vehicle' section), or try to use the spare key. If the car can still not be started, contact an Authorised Repairer.

Body Anti-theft System

Locking and Unlocking

When the vehicle is locked, the turn signal lamps illuminate three times; when it is unlocked, the turn signal lamps illuminate once.

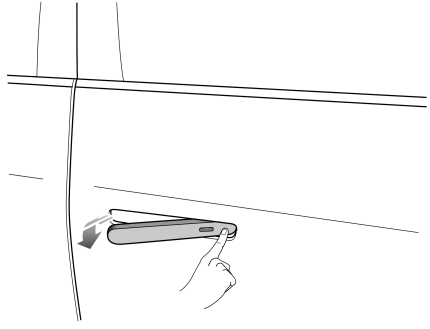

Note: Emergency situation to open the car door: Pull the door outer handle to try opening the car door. If the door outer handle doesn't pop-up, push the front side inwards, then pull the door handle to open the door.

Door Lock System Operations (Locking and Unlocking)

Remote Key

Using the remote key to lock/unlock: press the Lock button on the smart key to lock the vehicle after closing the doors, bonnet and liftgate; press the Unlock button on the smart key to unlock the vehicle.

Note: When the vehicle is locked, press the UNLOCK button on the remote key to unlock the vehicle, however, if no other operations have occurred within a period of time, the vehicle will automatically lock.

Mechanical Key

Using the mechanical key to lock/unlock: pull open the driver side door handle and insert the mechanical key into the lockhole. Turn clockwise to lock the vehicle. Turn counterclockwise to unlock the vehicle.

Note: If the start switch is not placed in the ACC/ON/READY position or the unlock button on the remote key has not been activated within several seconds (approximately 10 seconds) after the vehicle has been unlocked with the mechanical key, the immobiliser alarm will be triggered.

Find My Car

After the vehicle is locked, press the Find My Car button on the smart key, the Find My Car function will be enabled, sound and light will be emitted from the vehicle, allowing the user to be aware of its location. Pressing this button on the smart key again will suspend the Find My Car function. Pressing the unlock button on the smart key will cancel the Find My Car function and unlock the vehicle. Find My Car function can be set in the vehicle settings interface on the entertainment display.

Keyless System

The keyless entry system can lock and unlock the doors or open the liftgate as long as you carry the smart key and approach to the car.

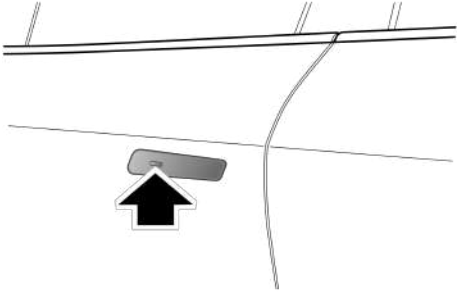

Note: Keep the distance between the smart key and the door handle within the 1.5 m range in order to lock and unlock the doors using the keyless function.

Keyless Locking

After pressing the Start switch to stop the power system, press the button on the front door handle once (no need to press the lock button on the smart key) to lock all doors before leaving the car , the immobiliser will also be activated. .

Keyless Unlocking

Press the button on the front door handle once to unlock the vehicle, then pull the door handle to open the door.

Note: When the vehicle is locked, if you are within the smart key range and operate the door handle button but carry out no further action, the vehicle will then automatically lock itself to remain secure.

IMPORTANT
Once the door has been locked by the key, press the button on the door handle to unlock the vehicle. If the vehicle can not be unlocked or locked normally, please contact an MG Authorised Repairer.

Mislock

If the driver's door is ajar or the start switch is placed in 'ACC/ON/READY' and the user attempts to lock the vehicle, the vehicle will not be locked, the body anti-theft system will be inoperative and the horn will sound once to indicate a mislock.

If the vehicle is being locked with the driver's door closed but the passenger's door, liftgate or bonnet is not fully closed, the horn will sound once, indicating a mislock. In the event of this happening, the 'partial arming' attributes of the body antitheft system will be enabled. All fully closed doors, bonnet or liftgate apertures will be protected but the open aperture will not. As soon as the open bonnet, door or liftgate is closed, the system will enter the complete anti theft status. If the remote key is put back in (or left behind) the vehicle and the opened door is closed,the vehicle will automatically unlock itself.

Note: When the vehicle is locked but the liftgate is open and the key is placed within the vehicle. Should you attempt to close the liftgate, the liftgate will automatically open and will not close.

Antitheft Alarm

If the antitheft alarm has been activated, before it is turned off, the car horn will sound continuously. The antitheft alarm can be released by the following operations:

- Press the Unlock button on the smart key.
- Carry the remote smart key and press the button on the door handle.
- Carry the smart key and place the Start switch in the ACC/ON/READY position.

Interior Lock Switch

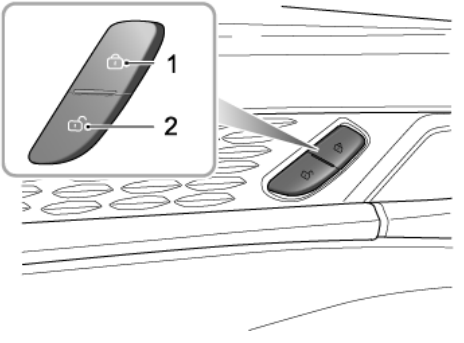

1 Lock Switch

2 Unlock Switch

When the body antitheft system is disabled, press the interior lock Lock switch (1) after closing all doors to

lock all doors; press the Unlock switch (2) to unlock all doors.

Note: If the vehicle anti-theft system is set, pressing the lock/unlock switch of the interior locks will not lock/unlock doors but will trigger the alarm system.

If the doors, bonnet or liftgate is closed, press the interior lock Lock switch, the yellow indicator under the Lock switch will illuminate.

If the non-driver door, bonnet or liftgate is not fully closed, press the interior lock switch, the yellow indicator under the Lock switch will flash.

Interior Door Handle

Pull the inner door handle to unlock and open the door.

Auto Lock When Driving

When the vehicle moves forward and the vehicle speed exceeds a certain value, all the doors will be locked automatically.

Automatic Unlock When Flameout

When the Start switch is turned off, all the doors will be unlocked automatically.

Tailgate

Electric tailgate

If the tailgate can not be closed due to the type of cargo loaded or if the weatherstrip seal is damaged, it is recommended you close all windows when driving, select the face distribution mode of the air conditioning and set the blower to maximum speed, so as to decrease any fumes entering the vehicle.

Prior to opening or closing the tailgate always ensure there are no people or objects that may obstruct operation. This may cause physical harm or damage.

While opening/closing the tailgate, the system will provide users with reminders through buzzer alarms.

Electric tailgate Open/Close Mode

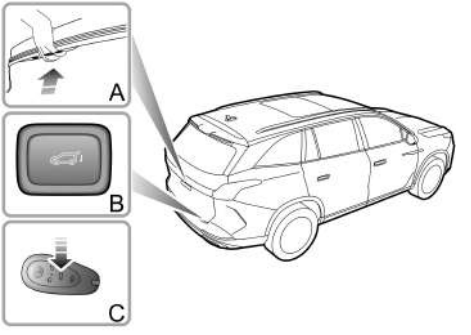

The electric tailgate can be opened or closed in the following ways:

- ***Opening/Closing the tailgate from outside the vehicle:*** When the vehicle is unlocked or the matching key is around the tailgate (approx 1 meter). Pressing the button (A) will open the electric tailgate; Pressing the button (B), the electric tailgate will close.

- ***Opening/Closing the tailgate with a smart key:*** When the vehicle is off, press and hold the smart key tailgate button (Icon C); this will allow the electric tailgate to open and close accordingly.
- ***Opening/Closing the tailgate from inside the vehicle:*** Press the tailgate switch on the entertainment display to open or close the tailgate.

Note: In case of extreme slopes, the tailgate may not be electrically opened or fully closed due to the change of centre-of-gravity position.

If the tailgate fails to correctly open to the preset height or close completely, close it manually and at a slow speed till it latches. This will allow the electric tailgate system to recover the functions.

Note: During manual operation of the electric tailgate, avoid violent or rapid operation, so that the electric tailgate system will not be damaged.

Foot Kick Sensing Function*

When a valid smart key is within the effective range of the tailgate, the tailgate can be opened by foot kick sensing.

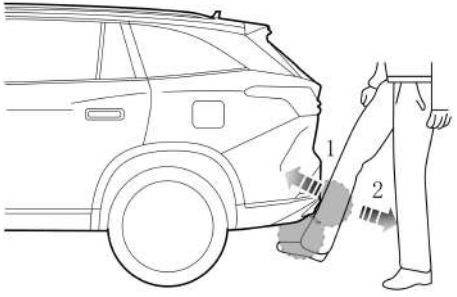

To open the tailgate by foot kick sensing, stand on the middle behind the vehicle as far as possible, move your foot and lower leg quickly to a position (1) as close to the rear bumper as possible, where your lower leg must be in the upper sensor area and your

foot must be in the lower sensor area, then move your foot and lower leg quickly away from the sensor area (2), and the tailgate will be opened automatically.

The foot kick sensing function can be set on or off with a soft switch on the entertainment display as needed. When washing your car or performing maintenance and service work near the rear bumper, to prevent the tailgate from opening due to accidental triggering of the sensing function, please first turn off the foot kick sensing function with the soft switch on the entertainment display.

In some cases, the tailgate opening by foot kick sensing will not be available or will be limited, so you can open the tailgate in other ways.

Anti-pinch Function

During opening: In case any object that may interfere with the opening of the tailgate is detected, the tailgate will stop opening and close back by a certain angle to prompt for the obstacle.

During closing: In case any object that may interfere with the closing of the tailgate is detected, the tailgate will stop closing and open back by a certain angle to prompt for the obstacle.

Note: If the electric tailgate is operated several times in a short period of time and triggers the thermal protection, the system will suspend the electric opening and closing function for protective reasons. In this situation, manually close the tailgate completely once and wait for more than three minutes to reinstate the function of the electric tailgate system.

Note: If the electric tailgate anti-pinch function is activated for multiple times consecutively, the system will suspend the electric opening and closing function for protective reasons. In this situation, manually close the tailgate completely once to reinstate the function of the electric tailgate system.

Opening Height Setting of Power Tailgate

Users can set the opening height of the power tailgate as needed by using the Close button at the tailgate or the entertainment display. The power tailgate controller will record the new opening height.

Setting method 1:

1 Open the tailgate to the desired height, and keep it stationary.

2 Press and hold the Close button at tailgate for more than 3s, the buzzer will make a sound to indicate the height has been set successfully.

Setting method 2:

1 Turn on the entertainment display and enter the tailgate height setting interface for setting.

Note: If the electric tailgate system failure occurs, the relevant warning message 'Electric Tailgate System Failure' and icon will be displayed in the message centre of the instrument pack, please contact an MG Authorised Repairer.

Note: If the electric tailgate system failure occurs, relevant warning message 'Electric Tailgate System Failure' and icon will be displayed in the message centre of instrument pack, please seek an MG Authorised Repairer.

Tailgate Emergency Open

The tailgate emergency open switch is located in the inner side of the tailgate lock.

Lower the rear seat to make sure the emergency open lockhole plug on the tailgate trim panel can be accessed.

Remove the cover as seen in figure A and rotate the emergency release counterclockwise with a proper tool to open the tailgate from inside (B).

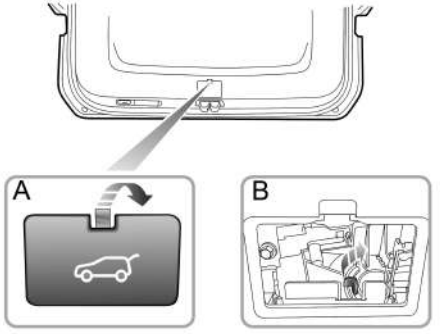
A
B

Load Carrying

DO NOT exceed the gross vehicle weight or the permitted front and rear axle loads. Failure may result in vehicle damage or serious injury.

Load Space

Ensure that the rear seat backrests are securely latched in the upright position when loads are carried in the load space behind the seats.

When luggage is carried in the load space, always ensure heavy items are placed as low and as far forward, as possible, so as to avoid the cargo shift in the event of an accident or sudden stop.

Drive carefully and avoid emergency braking or maneuvers when large or heavy items are carried.

IMPORTANT
Traffic regulations must be observed when loading cargo, if the cargo extrudes the loadspace, appropriate warning measures must be taken to warn other road users.

Internal Loading

DO NOT carry unsecured equipment, tools or luggage that could move and cause personal injury in the event of an accident, a situation where emergency braking or hard acceleration is needed.

DO NOT obstruct the driver's or passenger's vision with loads.

Folding the rear seats can increase luggage space, refer to 'Seat Adjustment' described in the 'Comfort Systems' section.

Towing

General Towing Safety

Exceeding any load limits advised by MG Motor is dangerous. Consult the recommended load limits and loading prior to any journey.

Exceeding any load limits advised by MG Motor is dangerous. Consult the recommended load limits prior to any journey.

Excessive towing loads reduce front tyre traction and steering control, too little trailer nose load can make the trailer unstable and cause it to sway.

Your vehicle can tow a trailer if you carefully observe load limits, use approved equipment, and follow the towing guidelines. Always check load limits before towing.

Towing loads in excess of the maximum towing weight can seriously affect vehicle handling and performance, this could damage your vehicle and drive-train.

When adding a towing device to the vehicle

When towing, all rear vehicle lights must remain visible to road users behind the vehicle and must not be obscured/partially obscured.

If towing light sources are obscured, a secondary lighting source shall be used such as a lighting board.

Only the towing device that is easy to be removed or repositioned can be installed.

When not towing, the fitted towing device must not obscure any lighting source. If the towing device obscures or partially obscures a lighting source such as the fog lamp it must be removed or retracted when not towing.

When not towing, the towing device should be removed or repositioned to avoid obstructing the rear registration plate.

Tow bars

Only genuine MG approved tow bars should be fitted to your vehicle. Only use the attachment method specified by the vehicle manufacturer for securing the towing hitch. Contact an MG Authorised Repairer for more information.

Safety chains

Safety chains must be used as a precautionary measure to prevent the trailer from unintentionally becoming unhitched. Make sure the safety chain is securely attached to both the trailer and the vehicle prior to departure.

Altitude

Your engine delivers less power at higher altitude. If you tow a trailer in a mountainous area you should reduce the combined vehicle and trailer weight by 10% for every 1000 m of elevation.

Gradients

Where possible, when towing, you should plan your journey to avoid steep gradients. The advised brake towing mass stated assumes a maximum gradient capability of 12% . Where possible it is recommended you drive on gradients less than 12% . Follow the trailer associations recommendations for suitable roads.

Running in period

Avoid towing a trailer during your vehicles first 1000 km.

Towing Mode

Your vehicle provides towing mode selection, it can be engaged or disengaged via:

1 Automatically: Connection or disconnection of the electrical connection with the trailer and the vehicle.

2 Manually: Enter the entertainment display to switch the function On/Off.

Note: When towing mode is engaged automatically, manual adjustment via the entertainment display is not possible.

When towing mode is activated, some functions of the vehicle will be restricted or turned off (If you have the following features), as:

- Automatic emergency braking;
- Adaptive cruise control;
- Traffic jam assist;
- Lane Keeping Assist;
- Rear-facing driver assistance system;
- Parking Assist.

Note: If the towing device is equipped with a tail light cluster, the vehicle also controls the trailer's lights after connecting the electrical wiring kit.

Note: When operating the rear fog lamps, the trailer's rear fog lamps will also operate.

Fuel system

Fuel requirements

Only automotive gasoline that meets national standards and is of a grade recommended by the OEM is permitted! Using other grades of fuel may damage your vehicle's fuel system, engine-related components and exhaust system.

Please follow the information on the fuel filling label for refilling. See 'Technical Data' in the 'Engine Parameters' chapter for details.

E5 : The mass ratio is the most contained 2.7% Oxygen to volume ratio is the most 5% Unleaded gasoline fuel for ethanol.

E10 : The mass ratio is the most contained 3.7% Oxygen to volume ratio is the most 10% Unleaded gasoline fuel for ethanol.

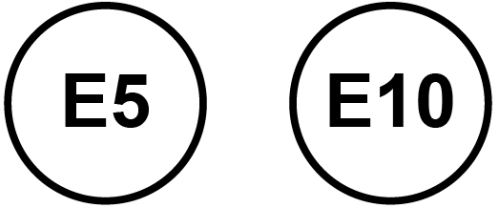

If low-grade gasoline is used, You may hear an engine knocking noise, Please use the recommended gasoline as soon as possible. If you can still hear a heavy knocking sound after using the recommended gasoline, Please contact your local MG Authorised after-sales service center for overhaul immediately.

Fuel filler

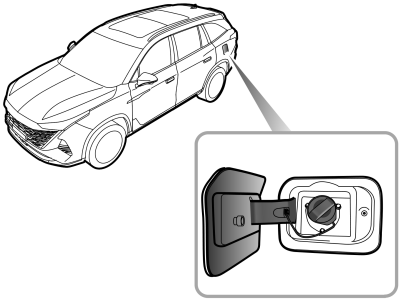

Fuel filler flap

When washing the vehicle, Never use a high-pressure water gun to flush the small door area of the fuel filler.

Fuel filler flap is located in the right rear of the vehicle. The vehicle uses a high-pressure fuel tank system. The pressure in the fuel tank will be higher than the atmospheric pressure. Before opening the fuel filler flap, press the fuel filler flap release switch (located at the bottom left of the driver side instrument panel) for 2 seconds and then release, the system will relieve the pressure within the system allowing the user to prepare to refuel. The instrument pack will show 'Preparing for Refuelling, Please Wait...' After the refuelling preparations are completed, the instrument pack will show 'Preparations Completed, Please Refuel'. At the same time, you will hear a 'Click' , and you can open the fuel filler flap.

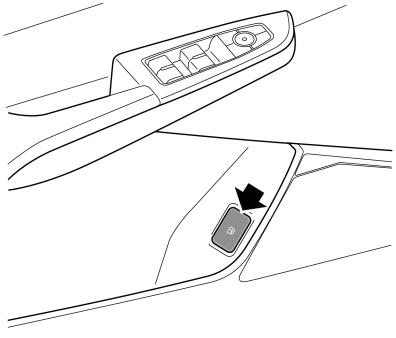

In the rare case of the fuel filler flap failing to open 30 seconds after the fuel filler flap release switch has been pressed, press the release switch again as the pressure may not have been completely relieved. Once the fuel filler flap has opened, please unscrew the fuel filler cap slowly prior to refuelling, In such a rare case, the oil gun may be shut off in advance, please contact an MG Authorised repairer for service as soon as possible.

When the instrument pack displays 'Refuelling System Failure', it indicates a fault within the refuelling system. In this case, please contact an MG Authorised Repairer for service as soon as possible.

Please ensure the vehicle is in the Park (P) gear before refuelling. When the vehicle is not in Park (P) gear and the fuel request switch is pressed, the instrument pack will display the prompt: 'Fuel, please shift to P gear'. Please shift to the P gear and then press the fuel request switch.

When the vehicle is in the P gear and the vehicle has been started, pressing and releasing the fuel request switch will automatically shut the vehicle down. If the engine is not turned off, the instrument panel will prompt 'Please turn off when refuelling'. The driver will then need to turn off the vehicle and then press the refuel request switch.

If the fuel filler door has not been closed the instrument pack will prompt 'The fuel filler door is not closed'. Please stop as soon as safety permits and close the fuel filler door .

If the fuel filler door is not closed, the next time you refuel, you will still need to press the release switch of the fuel filler door first and only open the fuel filler cap after the refuelling preparation work has been completed; otherwise there may be a safety hazard.

Do not forcefully open the fuel filler door when it is not unlocked.

Fuel tank filler cap

Slowly rotate the filler cap in a counterclockwise direction, Before opening the filler cap, Release the pressure in the tank.

Once refuelling has been completed, reinstall the fuel filler cap and tighten until you hear a 'click' sound.

Fuel filling

Petroleum is highly flammable and in confined spaces is also extremely explosive.

Care is required when refueling:

- Turn off the engine;
- Do not smoke or use open flames;
- Don't use a mobile phone;
- Prevent fuel spills;
- Do not overfill with fuel.

If the vehicle is parked in direct sunlight or high temperatures, Please do not fill the tank completely, The expansion of the fuel can lead to the fuel spillage.

If the engine does not run smoothly after refueling, Turn off the engine, Do not start again, Contact your local MG Authorised after-sales service center for an overhaul immediately.

Steering System

All models of this series are equipped with electric powersteering. The function works only after the vehicle has been started.

IMPORTANT
If the EPS fails, the steering may appear very heavy, which significantly affects driving safety!

Steering Wheel Position Adjustment

DO NOT attempt to adjust the position of the steering wheel while the car is in motion. This is extremely dangerous.

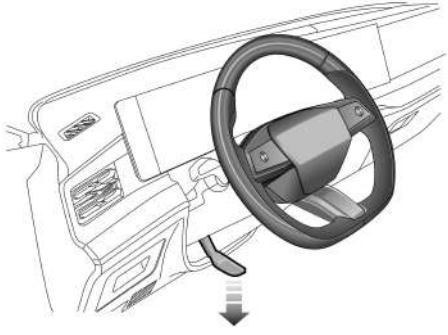

Adjust the position of the steering wheel to suit driving posture:

1 Fully release the locking lever (as arrowed).

2 Hold the steering wheel in both hands and tilt the steering column up or down to adjust the steering wheel height; push and pull the steering wheel to adjust the distance between the steering wheel and the driver.

3 Once a comfortable driving position has been selected, pull the locking lever fully up to lock the steering wheel into its new position.

Steering Feel

The 'Steering Feel' can be adjusted via the driving mode customisation interface within the intelligent display screen, here you can set and switch the modes according to your needs.

1 Light: Provides a high level of steering assistance with an overall light feel.

2 Standard: Provides moderate level of steering assistance with a moderate feel.

3 Heavy: Provides a low level of steering assistance with a heavier feel.

IMPORTANT
Holding the steering wheel on full lock for long periods will result in a reduction in power assistance causing a heavier feel to the steering.

Alcolock*

The alcolock is only used as a detector to assist in restricting the driver from driving when the alcohol concentration exceeds the legal limit. However, remember that you are always the primary person responsible for road traffic safety. For the safety of you and other traffic participants, drunk driving is illegal and strictly prohibited!

Your vehicle can be equipped with an alcolock. Please contact an MG Authorised Repairer for details.

After fitting the alcolock, you need to take the handheld device and exhale to detect the alcohol concentration before starting the vehicle. If you obtain an alcohol concentration below the legal limit, the vehicle can then be started.

Note: The handheld device should be placed in a position that is easily accessible and does not affect driving. Please contact an MG Authorised Repairer to help you fit and set up the alcolock.

IMPORTANT
If you fail the alcohol test, do not attempt to start the vehicle forcibly for your safety. If you suspect that the alcolock has failed, please contact a local MG Authorised Repairer.

Drive the Vehicle

Starting and Stopping the Power System 136

Economical and Environmental Driving 139

Electric Drive Transmission 143

Energy Recovery 147

Driving Mode 148

Parking Brake 150

Service brakes 152

Power source setting 154

Starting and Stopping the Power System

Start Switch



The keyless start switch is located on the right of the instrument panel next to the steering column. To operate the system, the smart key must be in the car.

Each display state of the Start switch is described as follows:

No Light Being Displayed (OFF)

The power system is shut off in this position.

Yellow Light (ACC)

When the vehicle is OFF , press the Start switch once only to enter the ACC state. The yellow light on the start switch will illuminate and some electrical appliances (such as the power windows, etc.) can now be operated.

Green Light (ON/READY)

- With the vehicle in the 'ACC' state, pressing the start switch again without starting the power system will place the vehicle in the 'ON' state, the green light on the start switch will illuminate and some electrical appliances such as the instrument pack can be operated.
- All electrical appliances can work after the power system is started and the vehicle is in READY state.

Note: When the START/STOP Switch is turned off and a door is opened, if the key is still in the car, the horn will sound in succession when the door is closed. The warning sound will emit when the door is opened again and the warning icon and prompt message will be displayed in the instrument pack indicating 'Please Take Your Key'.

Strong radio signals will disturb the keyless start system. If your vehicle is close to strong radio signals, then the start stop button may not operate as normal.

Starting the Power System

Starting the power system as follows:

1 Switch off all unnecessary electrical appliances (including the air conditioning);

2 Turn off the parking brake;

3 Ensure the shift lever is in the P position and press the brake pedal;

4 Press the Start switch, and immediately release it after the power system has been started.

Standby Starting Procedure

When the vehicle is in a strong radio signal interference area or the smart key low battery prompt is displayed in the instrument pack, please start the vehicle by the following steps:

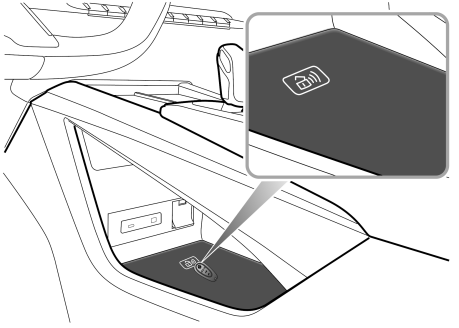

1 Place the smart key to the position as illustrated.

2 Place the shift lever in P position, depress the brake pedal, press the Start switch, and start the power system.

After the battery of smart key is replaced or the car leaves the interference area, if the keyless starting procedure can still not be used normally, please seek a local MG Authorised Repairer for service.

IMPORTANT

- If three consecutive attempts to start are unsuccessful, please seek assistance from an MG Authorised repairer. Otherwise, multiple consecutive starts may cause damage to the power system and battery.
- This car is equipped with an anti-theft system. Any privately prepared key cannot start the vehicle.
- In environments with temperatures below -10 degrees Celsius, the time for the power system to start will increase. Therefore, when starting, turn off all unnecessary electrical equipments.

Stopping the Power System

Stopping the power system as follows:

1 After bringing the car to a stop, ALWAYS press the brake pedal;

2 Apply the parking brake;

3 Place the shift lever in P position;

4 Press the Start switch to stop the power system.

Economical and Environmental Driving

Running-in

The brakes and tyres need time to 'bed-in' and adjust to the demands of everyday motoring. Therefore, in order to enhance the long-term operation performance, try to avoid rapid acceleration, rapid deceleration or emergency braking during the first 1500 km (932 miles).

Environment Protection

Your car has been designed with the latest technology in order to minimise hazards to the environment.

Economic Driving

The way in which you drive your car has a significant bearing on the life span of the car, as well as affecting the energy consumption.

Drive Smoothly

Traveling at a suitable constant speed is more energy saving than frequent braking and acceleration. Avoid making hard accelerations, sudden starts and emergency braking. Steady acceleration or deceleration uses considerably less energy than rapid acceleration or emergency braking and will minimise the wear to mechanical components.

Avoid Driving at Maximum Speed

Both energy consumption and noise levels increase significantly at high speeds.

Driving Foreseeingly

Avoid roads with traffic congestion or traffic jams. Foresee road congestion as early as possible and keep enough distance to the front car when driving and

slow down in time. Avoid stamping on the brake pedal for a long time if there is no need as this will cause premature wear on the friction plate.

Proper Use of Auxiliary Electrical Equipment in Car

Although it is essential to remain in a comfortable environment when operating the vehicle, the use of interior auxillary electrical equipment will increase energy consumption.

Driving in Special Environment

Driving in Rain or Snow

Emergency braking, accelerating and steering on slippery roads will reduce the vehicle's handling performance and grip.

- If the window or windshield fogges up, please use the air conditioning defogging function; If there is water film on the rearview mirror or fog on the rear windshield, please use the external rearview mirror and rear windshield heating function.
- If the road surface is frozen or covered with snow, the friction between the tires and the road surface becomes very small, making it highly prone to lose traction, potentially leading to an accident. Please stop driving; Or install a suitable anti-skid chain before driving, refer to 'Tyres' in the 'Maintenance' section

Driving through Water

Do not venture into low-lying waterlogged roads or unknown water wading areas, as this may result in the failure of the power system, serious vehicle malfunctions (such as short circuits in electrical components), or damage to the power system due to water ingress! Any vehicle malfunction or damage resulting from this will no longer be covered by MG's warranty terms.

When driving a vehicle, try to avoid passing through waterlogged roads or areas with puddles as much as possible. If you need to drive through water, please follow the following suggestions:

- Before entering the flooded section, the depth of the water must be clear, and the height of the water should not exceed the lower edge of the vehicle body;
- If you want to drive through water, you need to turn off the air conditioning before starting, lightly step on the accelerator pedal without releasing your foot, smoothly and slowly pass through the flooded road section, and control the speed within 10 km/h (6.2 mph);
- Do not reverse in water or park the vehicle in stagnant water. If driving through water causes the vehicle to stall, please do not attempt to start the vehicle again. Please contact an MG Authorised after-sales service center for inspection;
- After passing through water, please lightly press the brake pedal continuously to confirm that the braking performance is normal and avoid emergency braking;
- After passing through water, please check if the lighting and horn functions are normal;
- After wading through water, it may affect the functionality and performance of the vehicle. It is recommended to contact an MG Authorised after-sales service center for inspection in a timely manner.

IMPORTANT

- When there is water or mud on the surface of the brake discs, it may cause a decrease in braking performance and thus extend the braking distance. Please drive carefully to prevent any accidents from occuring..
- Wet brake pads may not function properly. If only one brake can operate properly, it can affect steering control and cause any accidents from occuring.
- After water enters the interior of high-voltage components, it has a significant impact on their insulation properties. Water contains a lot of conductive substances, which may cause internal short circuits in high-voltage components, seriously affecting vehicle safety and driving performance.

Check and Service

Check Tyre Pressures Regularly

Over or under-inflated tyres wear out more rapidly and also have a detrimental effect on the car's handling characteristics. Under-inflated tyres increase the rolling resistance of the car which, in turn, increases energy consumption.

Do not Carry Unnecessary Loads

The additional weight of unnecessary loads wastes energy consumption, especially in stop/start conditions where the car is frequently required to set off from stationary. Avoid sticking mud, etc. to vehicle chassis, which not only will reduce body weight, but also can prevent body corrosion.

Maintain Correct Four-Wheel Alignment

Avoid collision with the kerb and reduce speed on uneven road surfaces. Incorrect four-wheel alignment not only will cause premature tyre wear, but also will increase power load and energy consumption.

Electric Drive Transmission

Instructions for use

The following information is very important, please read it carefully before use:

- The electric drive transmission consists of a high-voltage unit. Do not touch any drive components without proper training and qualification certification.
- Step on the brake pedal and when the vehicle's power system is ready, switch the shift ball to the desired gear.
- Ensure that the electronic parking system is released and keep the brake pedal depressed until you are ready to drive. On a flat road surface, once the brake pedal is released, the vehicle will automatically move slowly without pressing the accelerator pedal.

Drive modes

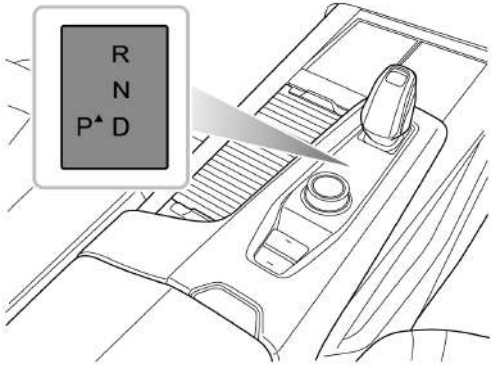

The electronic shift ball head is in the middle steady state position, with two non steady state positions forward or backward respectively. Once released, the electronic shift ball head will return to the middle steady state position.

Note: When shifting out of P gear or into R gear, you should depress the brake pedal while pressing and holding the UNLOCK button.

- P Parking Gear

  Please select the P gear when the vehicle is parked/stationary.

  Pressing the P gear button on the gear shift will place the vehicle in park.

  Turning off the vehicle will automatically shift the vehicle into Park (P gear)
  Note: With the brake pedal released, the driver seat belt unfastened and the driver door open, the vehicle will engage the P gear automatically.

- R Reverse Gear

  Select this gear only when the vehicle is completely stationary and the driver has the intention to drive backwards.

  Depress the brake pedal, push the electronic shift ball all the way forward and the vehicle will enter the reverse gear.

- N Neutral Gear

  When the vehicle is stationary (such as waiting for traffic lights), this gear can be selected.

  In P gear, press the brake pedal and push the electronic shift ball forward or backward to enter Neutral (N) .

  Push the electronic shift ball forward in D gear to enter Neutral (N).

  In R gear, push the electronic shift ball head backwards to enter Neutral (N).

- D Drive Gear

  Used for normal driving.

  In P gear, press the brake pedal and push the electronic shift ball head backwards to the bottom, the vehicle will enter the driving gear.

  In R/N gear, press the brake pedal and push the electronic shift ball to the bottom to put the vehicle into drive (D gear).

Electric Drive Transmission Protection Mode

When parking the vehicle, please ensure the vehicle is parked safely and that all traffic by-laws are observed.

Electric drive transmission power limit

Under conditions such as frequent starting, rapid acceleration and deceleration, prolonged climbing of steep slopes, and overload of the electric drive transmission in high-temperature environments, the electric drive transmission may become extremely hot.

In some cases, to avoid motor damage, the system will implement power limitation. The warning indicator light on the instrument interface will turn on.

In this situation, stop at a safe place or maintain a low load and continue moving at a constant speed to cool down the motor. Only when the motor temperature drops and the warning indicator light goes out the vehicle can then drive normally.

If the warning indicator light still does not turn off after the electric drive transmission has cooled down correctly for a long time (about 20 minutes), please immediately stop at a safe place and contact an MG Authorised Aftersales Service Center for maintenance as soon as possible, otherwise it may seriously damage the electric drive transmission.

Electric drive transmission motor malfunction

When the system detects a general fault in the electric drive transmission motor or controller, the instrument interface warning indicator lights up in yellow. Please drive carefully and make an appointment for maintenance at this time . For severe functional faults, the warning indicator light will turn red. Please stop the vehicle safely and contact an MG authorised after-sales service center for maintenance as soon as possible.

Power system malfunction

When there are some general faults in the power system, the warning indicator on the instrument panel lights up in yellow. Please drive carefully and schedule repairs at this time. For severe functional faults, the warning indicator light will turn red.

Please drive with caution or stop safely and contact an MG authorised repair center for maintenance as soon as possible.

When there is a partial malfunction, the power system will forcibly cut off the electric drive transmission, preventing the vehicle from travelling further. Please contact an MG Authorised after-sales service center as soon as possible for maintenance.

Shift system malfunction

When certain serious functional faults occur in the shifting system, the instrument interface will display 'EP'. During this time, for the sake of driving safety, when the vehicle speed is below a certain value, the power system will forcibly cut off electric drive transmission, preventing the vehicle from traveling further. Please contact an MG authorised service center as soon as possible for maintenance.

Energy Recovery

The decrease in vehicle speed caused by energy recovery cannot replace the driver when braking. Please ensure the driver is prepared to brake and ensure driving safety.

When the vehicle is in a braking or coasting state during operation, the energy recovery function is activated and the motor converts a portion of the vehicle's kinetic energy into electrical energy, which is then stored in the high-voltage battery.

Energy cannot be recovered or recovery is limited in the following situations, such as:

- Choose N gear (it is recommended not to change gear into neutral while driving);
- During torque intervention (gear shifting, tire slippage, etc.);
- High voltage battery fully charged;
- The temperature of high-voltage batteries is extremely high or low.

There are several modes for energy recovery settings, including:

'High' mode

In 'High' mode , Recovering more energy, short sliding distance, and strong dragging sensation of the vehicle.

'Moderate' mode

In 'Moderate' mode, The energy recovery is moderate.

'LOW' mode

In 'LOW' mode, less energy is recovered, the braking distance is increased and there is no obvious dragging sensation of the vehicle.

You can select the energy recovery mode through the entertainment display screen.

Note: On low adhesion road surfaces (such as ice), it is recommended to use the 'low' or 'moderate' mode.

Driving Mode

Switching the driving mode when the vehicle is in motion can divert driver's attention from road conditions, this operation can only be performed when safety permits.

Driving mode enables different tuning modes for power response, steering feel, and air conditioning performance, etc.

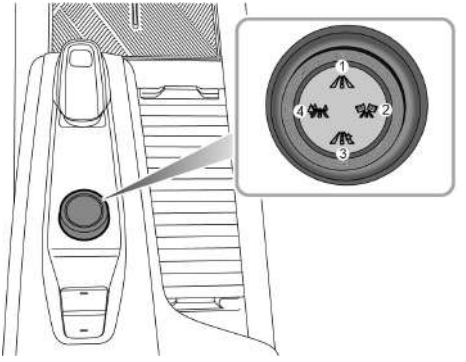

The driver can switch between the following driving modes through the mode knob or the entertainment display.

1 **Normal Mode**

The vehicle is in balanced tuning state for daily driving.

2 **Sport Mode**

This mode provides the driver with a dynamic driving experience, suitable for a sporty driving style.

3 **Custom Mode**

After selecting the Custom mode, the driver can perform personalised setting for some systems through the entertainment display when the car is stationary. For the mode setting, please refer to the entertainment display.

4 **ECO Mode**

The vehicle is in a low energy consumption state for eco-driving.

Parking Brake

Electronic parking system (EPB)

In the event of an EPB malfunction where the EPB release is not possible, please consult an MG Authorised Repairer in order to carry out an emergency manual release of the parking brake.

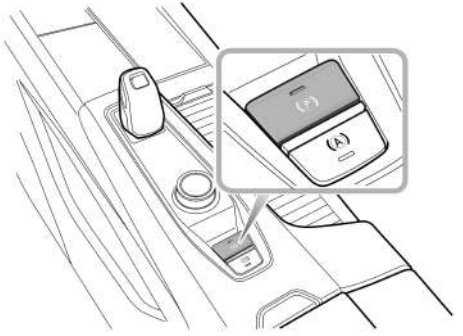

Pull up the EPB switch to turn on the EPB system after the vehicle has been parked safely. Place the Start switch in the 'ON/RUNNING/READY' position, depress the brake pedal, and press the EPB switch to turn off the EPB system.

If the indicator in the EPB switch and the indicator Ⓟ on the instrument pack illuminate, it indicates that the EPB system has been turned on. If the indicator in the EPB switch and the indicator Ⓟ on the instrument pack go off, it indicates that the EPB system has been turned off.

Note: Always apply the EPB system every time you leave the vehicle.

Note: An audible motor noise may be heard when operating the EPB system.

IMPORTANT
In the event of a flat battery or a power failure, it is not possible to apply or release the EPB. In such a similar situation, 'booster cables' shall be used for emergency start of the power system. Please refer to 'Jump Start' in the 'Emergency Information' chapter.

Auxiliary Start Function

If the driver's seat belt is fastened, the engine is started, D or R gear is selected and the accelerator pedal is depressed, the EPB system will automatically release.

Emergency Braking Function



Inappropriate use of the EPB can lead to accidents and injuries. Do not apply the EPB to brake unless in an emergency.



During the deceleration of the vehicle with the EPB, DO NOT switch off the Start switch, this could result in serious injury.

In the event of normal brake failure during driving, emergency braking can be initiated by pulling and holding the EPB switch upward. An audible warning will sound during emergency braking. The braking process will be cancelled by releasing the EPB switch.

Service brakes

This series of models is equipped with an Integrated Braking System (IBS), which operates the brakes the vehicle through dual circuits. Pay attention to the following during use of the IBS:

- The IBS only functions with the power system in READY mode. NEVER allow the vehicle to freewheel with the power system turned off.
- If the power system is turned off while driving, you should firmly press the brake pedal and stop the vehicle as quickly as traffic safely permits.
- If the IBS performance degrades due to low battery or other reasons, you need to apply more force than usual to the brake pedal to brake effectively.
- When driving through puddles or heavy rain, a water film may form on the surface of the brake disc, which easily reduces the braking efficiency and extends the braking distance. In this case, keep a safe distance from other vehicles and intermittently apply the brake pedal to keep the brake disc surface dry.
- If the braking efficiency decreases due to a fault with the vehicle or the IBS itself, please contact a local MG Authorised Repairer for service as soon as possible.

IBS will conduct a system self-check after the vehicle is normally powered off. In this case, the brake pedal appears to be too hard or unable to be depressed for a short period of time, which is normal.

Multi-Collision Brake System(MCB)*

The MCB function will automatically apply the brakes to reduce the vehicle speed and improve the vehicle stability after a collision. It is designed to reduce the risk of a secondary collision caused by the uncontrolled movement of the vehicle after a collision.

The MCB will be activated when the following conditions are all met at the same time:

- A vehicle collision where airbags are deployed;
- The vehicle speed is less than 37 mph (60 km/h);
- The steering wheel has not been turned in excess of 180° ;

- SCS is fault free.

If the driver presses the accelerator pedal firmly after the MCB function is triggered, the system will exit the braking state.

Note: The MCB function cannot decelerate the vehicle in all cases of collision due to the fact that the collision process may cause some parts to malfunction or fail and affect the normal operation of the function.

Power source setting

The vehicle provides a power source setting function, and you can choose three power source modes through the entertainment display screen: Pure electric priority, Intelligent hybrid, and Mandatory power protection.

Pure electric priority

In the 'pure electric priority' mode, the vehicle will prioritise the use of electric motors to drive the vehicle, reducing fuel consumption. The instrument pack will display ' Pure electric priority'.

If the battery power is insufficient to meet driving needs, start the engine to ensure power demand.

If charging is convenient and often short distance, it is recommended to choose this mode.

Intelligent hybrid

In the 'intelligent hybrid' mode, the vehicle starts the engine in a timely manner according to the actual working conditions to intervene and drive the vehicle. The instrument pack will display 'Intelligent hybrid'.

The vehicle prioritises fuel economy and driving comfort, while also taking into account the need to maintain battery life. For scenarios such as inconvenient charging, long-distance driving, long-distance mountain climbing and continuous high-speed driving, it is recommended to choose this mode in advance at a higher battery level.

Mandatory power protection

In the 'mandatory power maintenance' mode, the vehicle will prioritise the need to maintain power, controlling the power level near the customer set target value (30% -80%) and the instrument pack will display 'Mandatory Power Protection'.

For users who frequently go camping and pursue driving pleasure, it is recommended to choose this mode in advance at a higher battery level.

Leave Home Safe

Seat Belt	*157*
Airbag Supplementary Restraint System	*167*
Child Restraints	*176*
Child Protection Locks	*186*
Body Stability Control System	*187*
Antilock Brake System (ABS)	*188*
Auxiliary Brake System	*190*
Automatic Parking (Auto Hold)	*191*
Hill Hold Control (HHC)	*194*
Hill Descent Control (HDC)	*195*
Active Rollover Protection (ARP)	*197*
Emergency Braking Hazard Warning Strobe (HAZ)	*198*

Tyre Pressure Monitoring System (TPMS) *199*

Seat Belt

Overview

It is important that all seat belts are worn correctly. Always check that all passengers are wearing seat belts correctly. DO NOT carry passengers that are unable to wear correctly positioned seat belts. Wearing seat belts incorrectly may cause serious injury or even death in the event of a collision.

Airbags can not replace seat belts. Airbags can only provide extra protection when triggered and not all traffic accidents will trigger airbags. Whether airbags are triggered or not, seat belts can reduce the risks of serious injury or death in accidents.

Never unfasten a seat belt whilst driving. Serious injury or death may occur in the case of an accident or emergency braking.

DO NOT buckle the seat belt or insert the buckle with alternative steel when the driver leaves his/her seat.



This vehicle is equipped with a seat belt warning lamp to remind you to fasten your seat belt. Please refer to 'Warning Lamps and Indicators' in the 'Brief Introduction to Vehicle Functions' section for more information.

When the vehicle is moving, seat belts must be properly fastened for all occupants. Always fasten the seat belts - even for the short journeys as:

- You can never predict if you will be involved in a collision accident and how serious it may be.
- In the event of a collision or emergency braking, the seat belts will automatically lock. When the seat belt is worn correctly, the strongest bones in your body will bear the impact force to reduce your speed together with the vehicle, so as to prevent the out-of-control movement which may cause serious injury to the driver and passengers.

- The force generated by a low-speed collision cannot be supported by arms and hands even in a minor traffic accident.
- Experience has clearly demonstrated that correct wearing of seat belts is closely related to the effective protection of occupants in most collision accidents!

How to Wear Seat Belts Properly



Seat belts are designed for one person. DO NOT share seat belts.



DO NOT wrap a seat belt around when holding a baby or child in your arms.



Remove any heavy coats or clothing when wearing a seat belt, failure to do so can affect protection provided by the seat belt.



Seat belts should not be wrapped around hard or sharp objects such as pens, spectacles or keys to avoid additional injury to the users.



Do not drive when the seats are excessively reclined. Seat belts cannot function correctly when the seats are reclined excessively. When accident occurs, your body will cross the shoulder belt and harm your neck or other parts. Lap belt will slide to your abdomen and apply force on it, which will cause serious injury.

All seat belts are lap-shoulder belts, which are designed for use by normal sized adults. For advice on seat belt use with children, please see 'How Children Use Seat Belts'.

In order to maintain effective protection, the passengers must sit in the correct orientation, placing feet on the floor in front of them, with an upright body (no excessive recline) and the seat belt correctly fastened.

Lap-shoulder Belts

All seat belts fitted on this vehicle are lap-shoulder belts, which must be used properly as shown:

1 Hold the metal tab, pull the seat belt out steadily over the shoulder and across your chest. Ensure there is no twist on the belt.

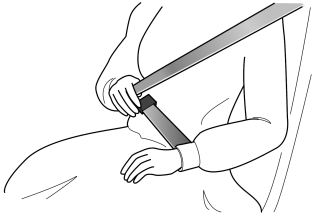

2 Insert the metal tab into the buckle until you hear a 'click', this indicates the seat belt is securely locked.

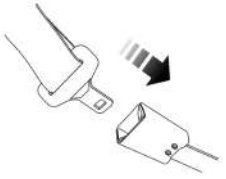

3 Pull the shoulder belt upward and tighten up the lap belt.

4 To release the seat belt, press the red button on the buckle, and the metal tab of the seat belt will automatically pop out. When the seat belt is unfastened, the metal tab will retract automatically to its original position.

Correct Routing of the Seat Belts

Ensure the seat belt is correctly positioned on the body, never cross the neck or abdomen, never pass the seat belt behind the back or under the arms.

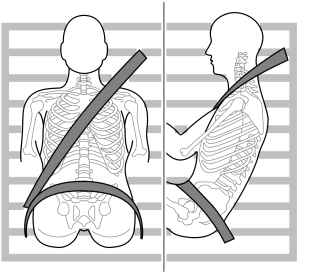

When wearing seat belts, the lap belt section should be positioned as low as possible across your hips (Never cross the abdomen), so that in a collision accident, the lap belt can apply force to the firm hips, reduce the possibility of body moving under the lap belt, and maximize the protection for passengers

against injury. This is because if the accident occurs, the body moves under the lap belt, causing the lap belt to apply force on abdomen, which may cause serious or fatal injuries. The diagonal section of the belt should cross the middle of the shoulder and the chest. Never cross your neck, arms, or cross under your arms or behind your back. In the event of emergency braking or a collision, the diagonal section of the belt will be locked.

To ensure that the seat belts always provide maximum protection, ensure the belt is flat, not loose and contacts the body. Adjust the seat belt accordingly to ensure it is not loose.

Seat Belt Use during Pregnancy

During the entire pregnancy, the pregnant woman must wear the lap - shoulder seat belt correctly. The diagonal section of the seat belt should pass across the chest as normal. The lap section of the belt should pass below the belly, low and snug on the hip bones. NEVER position the belt on or above the belly. Wearing correctly positioned seat belts will provide protection for both mother and unborn child in the event of a collision or emergency braking.



Please consult your physician for further details.

Seat Belt Use for Disabilities

It is a legal requirement that all occupants wear seat belts, this include people with disabilities.

Please consult your physician for further details.

Children and Seat Belt

Proper protection measures must be taken for children during driving.

For safety reasons, children must ride in a child restraint device fixed to the second- or third-row seat.

Infants

Only recommended child restraints suitable for the age, height and weight of the child should be used.

NEVER carry a child or infant with your arms during driving. When collision accidents occur, the weight of the child will produce so great of a force that you will not be able to hold on to the child. The child will be thrown forward and suffer serious injury or even death.

Seat belts for adults are not suitable for young children, because seat belts can not lock their hips tightly. If a collision accident was to occur, they will suffer from serious injury or even death. Therefore, they must be given special protection.

Infants must use a child restraint device. You shall choose the proper restraint device suitable for your vehicle and child and fit and use it in accordance with the instruction of the manufacturer. Please refer to 'Child Restraints' in this section for more details.

Elder Children

NEVER share a seat belt amongst children. In the event of an accident or collision, the children will not be secure and it could lead to death or serious injury.



When the children are heavy and beyond the age of using children restraint device, they must sit properly and use lap - shoulder belts equipped in the vehicle. Children are safer if they sit in the second- or third-row seat and wear seat belts correctly.

Check seat belts for proper position in time. Adjust the height of seat belts to keep the shoulder belt away from the child's face and neck. The lap belt must cross the hips as low as possible, just touch the thigh and tightened properly. In this way, seat belts can pass the applied force to the strongest part of the children's body in accidents.

If the shoulder belt is too close to the children's face or neck, please purchase and use suitable booster seats that meets relevant law or standard. Booster seats for children can allow the children to sit at a height where the shoulder belt can cross just the middle of the shoulder and lower the lap belt to the hips.

Seat Belt Pre-tensioners

The seat belt pre-tensioners will only be activated once and then MUST BE REPLACED. Failure to replace the pre-tensioners in time will reduce the efficiency of the vehicle's restraint system.

If the pre-tensioners have been activated, the seat belts will still function as restraints. Seat belts must be worn in the event that the vehicle remains in a drivable condition. The seat belt pre-tensioners should be replaced at the earliest opportunity by an MG Authorised Repairer.

The vehicle is fitted with seat belt pre-tensioners beside some seat belt retractors. When medium or severe frontal collisions occur and meets the conditions necessary to activate the pre-tensioner, it will help to secure the seat belt and reduce passengers moving forward.

The airbag warning lamp on the instrument pack will alert the driver to any malfunction of the seat belt pretensioners (refer to 'Warning Lamps and

Indicators' in 'Brief Introduction to Vehicle Functions' chapter).

The seat belt pre-tensioners can only be activated once. After activation in a collision, they must be replaced. This may also involve replacement of other SRS components. Please refer to 'Replacement of SRS Components' in 'Airbags' of this section.

IMPORTANT

- Seat belt pre-tensioners will not be activated by minor impacts.
- The removal or replacement of a pre-tensioner must be carried out by the manufacturer trained dealer technicians. For better guarantee of your safety, we recommend you to consult the MG Authorised Repairer.
- After 10 years from the use (or replacement of seat belt pre-tensioner) of the vehicle, it is recommended to replace the seat belt pre-tensioner assembly to guarantee your safety. If you have any doubt about the device within this period, we recommend you to consult an MG Authorised Repairer.

Seat Belt Checks, Maintenance and Replacement

Seat Belt Checks

Split, worn or frayed seat belts may not function correctly in the event of a collision, if there are any signs of damage, replace the belt immediately.

Always ensure the red release button on the seat belt buckle is pointing upwards to ensure easy release in the event of an emergency.

Please follow the instructions below to check the seat belt warning lamp, seat belt, metal tab, buckle, retractor and fixing device regularly:

- Insert the seat belt metal tab into the corresponding buckle and pull seat belt webbing close to the buckle quickly to check that the belt clasp locks.
- Hold the metal tab and pull the seat belt forward quickly to check that the seat belt reel locks automatically, preventing the webbing from extending.

- Fully extract the seat belt and visibly examine for twists, fraying, splits or worn areas.
- Retract the seat belt and allow it to return slowly to ensure continual and smooth operation throughout.
- Visibly examine the seat belt for missing or broken components or components that may affect the normal operation.
- Ensure the seat belt warning system is fully functional.

If the seat belt fails to pass any one of above checks, please contact an MG Authorised Repairer for repair.

Seat Belt Maintenance



Seat belt repairs and removal should only be carried out by an MG Authorised Repairer. The repair of a seat belt component must be carried out by the manufacturer trained, dealer technicians. In the event of accidents, improper maintenance may cause seat belt pre-tensioners not to be activated normally, increasing the risk of an injury during an accident. For better guarantee of your safety, we recommend you to consult the MG Authorised Repairer.



Ensure no foreign or sharp objects become lodged in the seat belt mechanisms. DO NOT allow liquids to contaminate the seat belt buckle, this could affect the buckle engagement.

Seat belts should only be cleaned with warm soapy water. Do not use any solvent to clean the seat belt. Do not attempt to bleach or dye the seat belt, otherwise the strength of the seat belt will be

severely weakened. After cleaning, wipe with a cloth and allow to dry. Do not allow the seat belt to fully retract before it is completely dry. Keep seat belts clean and dry.

If there are contaminants accumulated in the retractor, the retraction of seat belt will be slow. Please use a clean and dry cloth to remove any contaminants.

Seat Belt Replacement

Collision accidents may damage the seat belt system. The seat belt system may not offer full protection after damage, which may result in serious injury or even death. After an accident, seat belts should be checked and replaced as needed immediately.

Seat belts may not require change after minor collisions. However, some other parts of the seat belt system, like metal tab, buckle, retractor, etc, may be deformed or damaged in the collision. Please go to an MG Authorised Repairer for repair or replacement of the seat belt assembly.

Airbag Supplementary Restraint System

Overview

The airbag SRS provides ADDITIONAL protection in a severe frontal impact only. It does not replace the need or requirement to wear a seat belt.

The airbags together with the seat belts provide optimum protection for adults, but it is not the case for infants. The seat belt and airbag systems in the vehicle are not designed for protecting infants. The protection required by infants should be provided by child restraints.

In the corresponding place where airbags are fitted, there is a warning sign stating 'AIRBAG'. Generally, SRS contains the following components (the components are not completely the same according to different model and configuration):

- Front airbags (fitted in the center of the steering wheel and the instrument panel above the glove box)
- Side airbags (fitted in the outer seatback cushion of the two front seats)
- Side curtain airbags (fitted in the roof interior trim)
- Centre airbag (fitted in the inner seatback cushion of the driver seat)

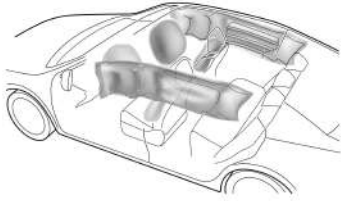

Airbag Warning Lamp



This vehicle is equipped with an airbag warning lamp to remind you of the state of the security system. Refer to 'Warning Lamps and

Indicators' in 'Brief Introduction to Vehicle Functions' chapter for details.

Airbag Deployment



Front seat passengers should not place feet, knees or any other part of the body in contact with or in close proximity to a front airbag.



To minimise the risk of accidental injury from inflating airbags, seat belts should be worn correctly at all times. In addition, both driver and front passenger should adjust their seat to provide sufficient distance from the frontal airbags, so as to avoid severe or even fatal injury when the airbag is deployed. If side airbags and side head impact protection airbags are fitted, both driver and front seat passenger should be seated to maintain sufficient distance from the upper part of the body to the sides of the vehicle, this will ensure maximum protection when the side airbags/side head impact protection airbags are deployed.

An inflating airbag can cause facial abrasions and other injuries if the occupant is too close to the airbag at the time of its deployment.

When airbags are deployed, children without proper protection may suffer from serious injury or even death. DO NOT carry children in the arms or on the knees during traveling. Children should wear seat belts suitable to age. DO NOT lean out of windows.

After deployment, the relative airbag components will become very hot, such as the steering wheel, instrument panel and both sides of the roof rails. DO NOT touch any airbag related components after airbag deployment, it may cause burns or serious injury.

DO NOT knock or strike the position where any airbag related parts are located, so as to avoid accidental airbag deployment which may cause serious injury or even death.

DO NOT affix or place any objects on or adjacent to the airbags. This may affect the airbag passage or create projectiles that may cause injury or serious harm in the event of airbag deployment

In the event of a collision, the airbag control unit monitors the rate of deceleration or acceleration induced by the collision, to determine whether the airbags should be deployed. Airbag deployment is virtually instantaneous and occurs with considerable force, accompanied by a loud noise.

In the event of a severe frontal collision, a completely deployed airbag, along with a correctly worn seat belt, can limit the movement of the driver and front passenger, reducing the risk of head and chest injuries. For vehicles fitted with side airbags and side curtain airbags, when the vehicle encounters serious side collision, the completely deployed airbag will

form a cushion of air between the occupant and the vehicle side to reduce the risk of body side injuries.

When you sit upright in the seat and against the backrest, seat belts and airbags can provide the most effective protection. When encountering serious collision, airbags will deploy drastically. At this moment, if you or other passengers do not use seat belts properly, and lean forward, recline or sit in other incorrect postures, you or other passengers are likely to suffer from serious injury or fatal injury.

IMPORTANT

- Airbags cannot protect lower body parts of passengers.
- Airbags are not designed for rear collision, minor frontal collision or if the vehicle rolls over, nor will it operate as a result of heavy braking.
- Deployment and deflation of the airbags takes place very quickly and will not protect against the effects of a secondary impact if it occurs.
- When an airbag inflates, a fine powder is released. This is not an indication of a malfunction. However, the powder may cause irritation to the skin and should be thoroughly flushed from the eyes and any cuts or abrasions of the skin. If your skin, eyes, nose or throat etc feels uncomfortable, please consult a doctor.
- After inflation, front and side airbags deflate immediately. This provides a gradual cushioning effect for the occupant and also ensures that the driver's forward vision is not obscured.

Frontal Airbags



NEVER use a rearward facing child restraint on a seat protected by an ACTIVE AIRBAG in front of it, DEATH or SERIOUS INJURY to the CHILD can occur. Refer to 'Disabling the Passenger Airbag'.



Front seat passengers should not place feet, knees or any other part of the body in contact with or in close proximity to a front airbag.



In extreme cases driving on very uneven surfaces may cause airbag deployment. Please take extra care when driving on uneven roads.

Frontal airbags are designed to deploy during serious frontal impacts or similar impacts. Conditions described below or similar ones may cause airbag deployment.

- A frontal collision with unmovable or non deformable solid objects at a high speed.
- Vehicle chassis are seriously damaged. Conditions that can cause serious chassis damage, such as: a collision with kerbstones, road edges or hard surface; falling into deep ravines or holes; or hitting the ground violently after jumping up.

Side Airbags, Centre Airbag and Side Curtain Airbags

The structure and material of the seat is critical to the correct operation of side airbags. Therefore, please DO NOT fit seat covers which may affect side airbag deployment.

In the event of a serious side impact, the relevant side airbag will deploy from the seat cover, and the side curtain airbags will deploy from the roof interior trim (only the affected side). The other side will not deploy. Conditions described below or similar ones may cause side airbag and side curtain airbag deployment.

- One side of the vehicle collides with high-speed ordinary passenger car.

Conditions in Which Airbags Will Not Deploy

The deployment of airbags does not depend on the vehicle speed, but on the object that the vehicle hits, angle of impact and the rate at which the car changes speed as a result of a collision. When the impact force of collision is absorbed or dispersed to vehicle body, airbags may not deploy; however, airbags may sometimes deploy according to impact condition. Therefore, the deployment of airbags shall not be judged based on the severity of vehicle damage.

Frontal Airbags

Under conditions described below or similar ones, the frontal airbags may not be deployed:

- The impact point is not central to the front of the vehicle.
- The impact is with a solid utility pole or traffic sign post.
- Collision with the bottom part of the truck's tail; cut-in collision with trucks or vehicles with a higher chassis.
- Frontal collision at an angle with guard bars.

- Impacts to the rear or side of the vehicle.
- The vehicle rolling over.

Side Airbags, Centre Airbag and Side Curtain Airbags

Under conditions described below or similar ones, the side airbags and side curtain airbags may not be deployed:

- Side impacts at certain angles.
- Light side impacts such as a motorcycle.
- Side impact on the engine compartment.
- Side impact on boot.
- The vehicle rolling over.
- Frontal collision at an angle with guard bars.
- Side collision with posts.
- Frontal collision with parking or moving vehicles.
- The impact is from the rear of the vehicle.

Disabling the Passenger Airbag*

The Passenger Airbag should only be disabled when a rear facing child seat is fitted to the front passenger seat.

When an adult is seated in the front passenger seat, ensure that the airbag is switched on.

The front passenger airbag disable switch is set in the intelligent display, it can be turned on or off by using the relevant button on the display: 'Vehicle' - 'Convenience' - 'Passenger Airbag'.

-  When the passenger airbag is disabled, the OFF indicator light illuminates.
-  When the passenger airbag is enabled, the ON indicator light illuminates.

Service and Replacement of Airbags

Service of SRS components

DO NOT install or modify the airbag. Any changes to the vehicle structure or airbag system wiring harness are strictly prohibited.

Changes to vehicle structure is prohibited. This may affect the normal operation of the SRS.

DO NOT allow these areas to be flooded with liquid and DO NOT use petrol, detergent, furniture cream or polishes.

If water enters the vehicle, it may cause damage to the SRS. In this case, even if the collision does not occur, the airbag may accidentally deploy. Immediately shut down the engine and disconnect the battery cable; do not try to start the power system. Please contact an MG Authorised Repairer for service.

If the airbag warning lamp fails to illuminate or remains on, or there is any damage in the front or side of the vehicle and the cover of the airbag module has any sign of damage, please go to a local MG Authorised repairer to check the SRS of the vehicle.

IMPORTANT
• The service of SRS or the steering wheel must be carried out by professionals according to the technical specification and processes of MG MOTOR UK LTD. For better guarantee of your safety, we recommend you to consult the MG Authorised Repairer. • After 10 years from the use of vehicle (or replacement of an airbag), it is recommended to replace the related components to guarantee your safety. If you have any doubt about the device within this period, we recommend consulting an MG Authorised Repairer. The appropriate page of the Service Portfolio must be signed and stamped for traceability once the work has been completed.

Replacement of SRS components

Even if the airbag does not deploy, collisions may cause damage to the SRS in the vehicle. Airbags may not function properly after damage, and can not protect you and other passengers when a second collision occurs, which may cause serious injury or even death. To ensure that airbag system can function properly after a collision, please go to an MG Authorised Repairer to check airbags and repair as necessary.

Airbags are designed for using once only. Once the airbag is deployed, you must replace the SRS components.

Child Restraints

Important Safety Instructions about Using Child Restraints

It is recommended that children below the age of 12 years old should be seated on the rear seat of the vehicle, in a child restraint system appropriate to the children's age, weight and height. Infants less than 2 years old should be restrained in an infant child restraint system.

It is recommended that a child restraint system that complies with UN or ECE-R 129 standard are fitted in this vehicle. Check markings on the child restraint system. When selecting a child restraint, please check the relevant labels or instructions on the restraint regarding the applicable height range for children and usage methods.

When installing and using a child restraint, it is necessary to comply with relevant laws and regulations, the instructions supplied by the child restraint manufacturer and the instructions on children's safety in this manual.

The correct use of child restraints will greatly reduce children's injury risk in accidents or relieve their injury severity. Please pay attention to the following when you use child restraints:

- It is recommended that children shorter than 1.5 meters (or under 12 years of age) should use the appropriate child restraint and cannot use a regular seatbelt, otherwise it may cause injury to the abdomen and neck.
- NEVER let children ride in unprotected case. Care should not be neglected because children are sitting in a child restraint.
- Only one child may be carried in any one restraint.
- DO NOT travel with a child on your lap or in arms when sitting in any seat.
- Proper child restraints can provide protection for your children.
- The relevant front seat may need to be adjusted frontwards for installing the rear-facing child restraint to the rear seats.
- The position of seat head restraints may need to be adjusted for installing the forward facing child restraint to the rear seats.

- Never let your child stand or kneel on the seat when driving, otherwise, your child may be tossed and thus lead to injury to their own and other people or even death when an accident occurs
- If a child's body leans forward or the posture is not correct during driving, then an accident will increase the risk of injury.
- The method of using seat belts have a great influence on the maximum protection offered by the seat belt, you must comply with the child restraint manufacturer's instructions on proper use of seat belts. If seat belts are not properly fastened, even a minor traffic accident may lead to injury.
- Child restraints that are not fitted correctly may move and injure other occupants in the event of an accident or emergency braking. Therefore, even if there is no infant or child in the child restraint, it should be fitted properly and securely in the vehicle.

Warnings and Instructions on Use of Child Restraint on Front Passenger Seat



NEVER use a rearward facing child restraint on the front passenger seat with the front passenger airbag activated, otherwise DEATH or SERIOUS INJURY to the CHILD may occur.

Use one child restraint per child.

In cases where there is a need to install a child restraint on the front passenger seat, deactivate the front passenger airbag function first or severe injury or even death can occur.

Once the child restraint is removed from the front passenger seat, reactivate the front passenger airbag.

When installing a child restraint on the front passenger seat, move the front passenger seat as far rearward as possible.

Please study the safety warning label on the sun visor. Always install the child restraint in the rear seat for security reasons. The above warning must be considered in special cases when the child restraint must be used on the front passenger seat.

Important Instructions on Children's Safety and Side Airbags

Children should not be allowed in areas where side airbags may be deployed, there is a risk of serious injury.

Only recommended child restraints suitable for the age, height and weight of the child should be used and firmly fixed in the vehicle.

DO NOT place any items in areas where side airbags may be deployed, there is a risk of serious injury.

In the event of a side collision, the side airbags can provide better protection for the passenger. However, when the airbag is triggered, a very strong expansion force is generated, if the passenger's seating position is not correct, the airbags or items in the side airbag deployment area may cause injury.

Therefore, the correct child restraint must be used to secure the child correctly in the rear seat whilst ensuring the child's seating position is correct and there is enough space between the child and the side airbag deployment area for the airbag to deploy without any hindrance in a traffic accident this will provide the best protection.

Fixing Child Restraints

Secured Using Lap and Shoulder Belts

Please DO NOT put the rearward facing child restraint on the front passenger seat with the front passenger airbag activated, this may cause serious injury or even death.



The child restraint can be secured to the rear seat by the lap and shoulder belts.

Secured with ISOFIX/i-Size Device

The ISOFIX/i-Size lower anchor is developed for the child restraint with an ISOFIX/i-Size attachment. Therefore, do not secure other child restraint belts or items to the anchor. Doing otherwise, will pose a life-threatening risk.

Child restraint anchorages are designed to withstand only those loads imposed by correctly fitted child restraints. Under no circumstances are they to be used for adult seat belts, harnesses, or for attaching other items or equipment to the vehicle.

The second-row seats of this vehicle on both sides are provided with ISOFIX/i-Size interface (as indicated by the arrow in the figure below) connected to the ISOFIX/i-Size child restraint. When installing and removing any child restraint system, always follow the manufacturer's instructions

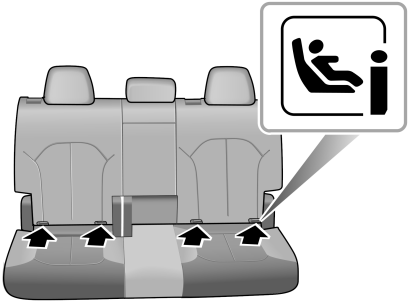

- Adjust the second-row seats to the most front before fitting ISOFIX/i-Size child restraint.
- Place the child restraint on the second-row seat, and insert its accessory (tapered plastic sleeve) into ISOFIX/i-Size anchor between the seat cushion and backrest (as arrowed in the figure above).
- Fasten vehicle-approved ISOFIX/i-Size child restraint systems to the mounting brackets.

- Adjust the second-row seat backrest to the proper position, ensuring that the backrest is locked in place.
- Engage the top-tether anchor strap hook of the child restraint into Top-tether anchor (as arrowed in the figure below).

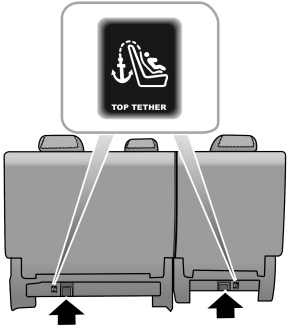

The Top-tether (as arrowed in the figure above) for auxiliary fixation of the child restraint, is provided at the back of the rear seat backrest. When the child restraint is installed on the rear seat with a top tether:

- Remove the cargo cover (If equipped) and adjust the head restraint to have access to the top tether anchorage and store the cover safely in the vehicle, and;
- The single top tether of the child restraint must pass through spaces between the rods of the rear seat headrest, a dual tether must pass from both sides of the rear seat headrest.

Note: When fitting a child restraint with top-tether, the top-tether must be connected with and fixed to the TOP-tether anchor.

- Adjust the second-row seats to the rear most position and ensure that the seats are locked in place.
- After the installation, push or shake the child restraint with moderate force to confirm it is properly secured.

Child Restraint Groups and Installation Position

Only approved child restraints suitable for children are allowed. Children taller than 1.5m should use the seat belts in the vehicle. Child restraints must comply with relevant regulations or standards, such as EU regulations ECE-R129.

Recommended Child Restraint Systems

ECE-R129 Classification based on a child height

Child's Height	Recommended Child Restraint[b)]
40~83cm	Maxi Cosi Pebble 360
76~105cm	Britax Römer TriFix^{2}i-Size
100~135cm	Britax Römer Kidfix i-Size[a)c)]

Child's Height	Recommended Child Restraint[b)]
135~150cm	Osann Booster Boost R129

Note:

[a)]For child restraint with back, please :

- ensure lap belt is in the Secure Guard, and;
- ensure diagonal belt is not in the Secure Guard.

[b)]Always refer to the CRS manual for instructions of use.

[c)]For the best protection, it is recommended to use this childrestraint sysytem with the included backrest and be sure to attach the seatbelt through Secure Guard and XP-Pad. The side impact extensions should be used and extended to the outermost when in use.

Suitable Seats for Attaching Child Restraint Systems

Seat position	Seat position					
	Driver side	Front passenger side[1]		2nd-Row Outboard	2nd-Row Centre	Other Row
		Airbag ON	Airbag OFF			
Seating position suitable for universal belted (yes/no)	No	Yes Forward facing only	Yes	Yes	Yes	Yes
I-Size seating position (yes/no)	No	No	No	Yes	No	No
Seating position suitable for lateral fixture (L1/L2)	No	No	No	No	No	No
Largest suitable rearward facing fixture (R1/R2x/R2/R3)	No	No	No	R3	No	No
Largest suitable forward facing fixture (F1/F2x/F2/F3)	No	No	No	F3	No	No

Seat position	Seat position					
	Driver side	Front passenger side[1]		2nd-Row Outboard	2nd-Row Centre	Other Row
		Airbag ON	Airbag OFF			
Largest suitable booster fixture (B2/B3)	No	(B2/B3)[2]	(B2/B3)[2]	B2/B3	(B2/B3)[2]	(B2/B3)[2]

Note:

- [1]When installing a CRS on the front passenger seat, move the front passenger seat as far back and as high as it can be adjusted to securely install the CRS.
- [2]Only applicable for installation with seat belt.
- During the installation of the CRS, the backrest angle of seats should be adjusted reasonably to ensure that the CRS remains stable.
- During the installation of the CRS, the height of the headrest should be adjusted suitably or the headrest should be removed to make the backrest of CRS be flat to the vehicle seat. Do not remove the head restraint when using a booster cushion with no backrest. Ensure all removed head restraints are stowed safely. Refit the head restraint once the CRS has been removed.
- When installing Gabarit on the 3rd row seat, please fold the 2nd row seats to enable installation.

Child Protection Locks

Do not leave children alone in the car.

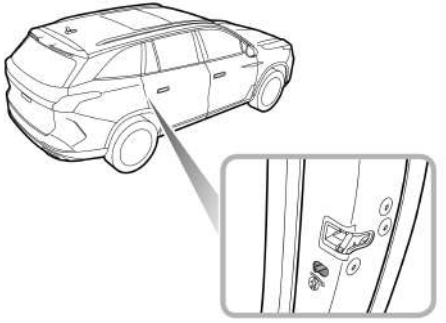

Enable or remove Child Protection Lock

- Open the corresponding side rear door, Follow the direction of the arrow, Toggle the child protection lock lever to the locked position, to engage the child protection lock;
- Follow in the opposite direction to the direction of the arrow, Toggle the lever to the unlocked position, to release the child protection lock.

Child protection lock after engagement, The rear door cannot be opened directly in the car, However, the door can be opened from the outside of the door.

Body Stability Control System

The electronic stability control system includes Dynamic Stability Control System (SCS) and Traction Control System (TCS).

SCS is designed to assist the driver in control of the driving direction. When SCS detects that the vehicle is not moving in the intended direction, it will intervene by applying brake force to selected wheels or through the power system to prevent sliding and stabilise the driving direction by correcting the understeer or oversteer.

TCS contributes to maintaining the control to the vehicle by improving the vehicle's traction trafficability and driving stability. TCS monitors the driving speed of each wheel individually. If spin is detected on one wheel, the system will automatically brake that wheel, transferring torque to the opposite, non-spinning wheel. If both wheels are spinning, the system will reduce engine speed in order to regulate wheel rotation until traction is regained.

SCS and TCS are automatically switched on when the Start switch is placed in the ON/RUNNING/READY position. They can be switched off by using the switch located on the Infotainment display.

Note: Disabling SCS and TC systems will not affect the normal operation of ABS . Always disable TC system when driving with anti-skid chains fitted.

Antilock Brake System (ABS)



When travelling at high speed or there is a danger of aquaplaning, i.e. where a layer of water prevents adequate contact between the tyres and the road surface, ABS cannot overcome the physical limitations of stopping the car in a short distance. In these cases, it is the responsibility of the driver to maintain a safe distance from other vehicles.



DO NOT pump the brake pedal at any time, this will interrupt the operation of ABS and may increase the braking distance.

The ABS is mainly used to automatically adjust the braking force of each brake when braking to prevent the wheels from being locked, thus avoiding dangerous situations such as loss of direction or side slip during emergency braking.

This system enables the driver to maintain control over the steering in case of emergency braking, keeps the vehicle stable, and improves the safety factor.

Under normal braking conditions, ABS will not be activated. However, if the braking force exceeds the adhesion between the tyres and the road surface, causing the wheels to lock, the ABS will automatically come into operation. This will be recognisable by a rapid pulsation felt through the brake pedal.

If emergency braking is required, the driver should apply full braking effort to trigger the ABS even when the road surface is slippery.

Note: On soft surfaces such as powdery snow, sand or gravel, vehicles equipped with ABS may have a braking distance greater than those without ABS. This is because the natural action of locked wheels on soft surfaces is to build up a wedge of material in front of (or to the side of, if steering) the tyre contact patch. This effect assists the car to stop when braking or to change direction when steering.

IMPORTANT
• Although ABS can greatly improve the driving safety, whether it can truly be safe still depends on the driver's own standardised driving behavior. • The operation of the normal braking system is not affected by partial or full loss of the anti-lock brake system (ABS).

Auxiliary Brake System

The auxiliary brake system consists of Electronic Brake Force Distribution System (EBD) and Electronic Brake Assistance System (EBA).

EBD automatically distributes the braking force between the front and rear wheels, so that the vehicle can have good braking performance under different load conditions.

The EBA increase the braking force applied on each wheel during emergency braking to assist the driver in quickly triggering the ABS , thereby shortening the braking distance.

Automatic Parking (Auto Hold)



The auto hold function cannot guarantee the stability of the vehicle when starting off or braking on hills especially on slippery or icy surfaces.



When auto hold stops the vehicle, for reasons such as engine shut-down, releasing the seat belt or pressing the auto hold switch, the electronic parking brake is applied. It cannot be guaranteed that the vehicle will be stabilised in all cases. For example, the rear wheels are on a slippery road surface or the vehicle incline is too great (larger than 20%). Please make sure that the vehicle is safely stabilised prior to exiting.



DO NOT leave the vehicle when the engine is operating and the auto hold is active.



Auto hold cannot guarantee the electronic parking brake operation in all cases where the ignition system is shut down. Please ensure the electronic parking brake is applied and the vehicle is stabilised prior to exiting the vehicle.



The auto hold function should be switched off during the use of automatic car washes, the electronic parking brake may suddenly apply and cause vehicle damage.

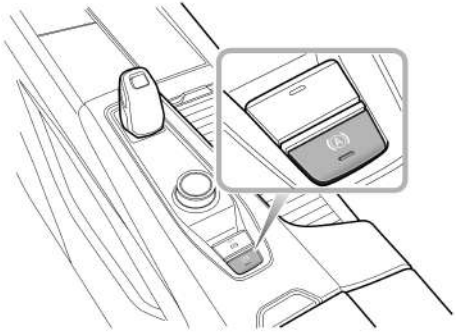

If the vehicle is required to stop frequently for long periods while driving (such as, waiting at the traffic lights, stopped on a slope or in urban stop-and-go conditions), the Auto Hold function can assist you in stabilising the vehicle, enabling you to remove your foot from the brake pedal when the vehicle is stationary and the Auto Hold is active.

Auto Hold has three states as follows:

1 With the driver's seat belt fastened, the driver's door closed and the engine running, press the Auto Hold switch to switch the auto hold function from Off to Standby state. The indicator will illuminate Ⓐ .

2 **Parking:**

- When the vehicle is moving forward, depress the brake pedal to a certain depth. After the vehicle has come to a complete stop, the Auto Hold function will be switched from standby to the parking state. In this state, the indicator Ⓐ on the instrument turns green.
- When the auto hold is in the Parking state, engaging D gear and depressing the accelerator pedal will automatically release the auto hold function based on the slope.

3 **OFF:** Press the Auto Hold switch again to disable the function.

When the auto hold is in the Parking state, it will exit this state under some circumstances such as releasing the seat belt, turning off the engine, remaining static

for a length of time or pressing the Auto Hold switch. At this time, the EPB will be applied.

Note: The system will NOT apply the parking brake with the brake pedal pressed and operating the switch to turn the auto hold off.

Note: When the vehicle is in P gear, the auto hold function will not be engaged.

Hill Hold Control (HHC)

It is impossible for HHC to keep the vehicle in a standstill state under all circumstances (e.g. slippery ground, snow and ice, etc.) when going uphill and the driver must constantly pay attention to the condition of the vehicle.

With the HHC in service, the driver is strictly prohibited from leaving the vehicle, otherwise serious accidents may occur.

During hill start under a stop-and-go road condition, please depress the brake pedal fully for several seconds before each start.

HHC assists the driver by 'holding' the vehicle during hill starts. If the driver releases the brake pedal, the HHC will hold the vehicle stationary for a short time.

HHC will be activated when the following conditions are met at the same time:

- The driver's seat belt has been fastened and the driver's door is closed.
- The vehicle is stopped steadily on a slope.
- SCS is fault free.
- EPB is fault free and released.
- The powertrain is on.
- The vehicle is in D or R gear.
- Sufficient force has been applied on the brake pedal before start.

Note: The HHC can also work when the vehicle is reversing uphill.

Hill Descent Control (HDC)

HDC is just an auxiliary function, which cannot ensure that the vehicle is driven down a steep slope at low speed under all circumstances (such as slippery ground, snowy road surface or excessive slope, etc.).

Even when HDC is in use, the driver MUST pay close attention to the driving state of the vehicle and take active control when necessary. In certain cases, HDC may remove itself from the operating state temporarily.

Even when HDC is in use, the driver shall still pay close attention to the driving state of the vehicle, and take active control when necessary. Because in certain cases, HDC may remove itself from the operating state temporarily.

Under some driving conditions on downhill surfaces (e.g. driving down a slope with high speed, small slope, etc.), HDC is inoperative, so the driver shall be required to control the speed by depressing the brake pedal to ensure safe driving.

HDC system is an auxiliary function designed for vehicles running on acute downhill surface. It reduces the speed by applying the brake force, thus assists the driver to drive on acute downhill surface smoothly.

Note: When the HDC is working, it is normal for the brake system to generate slight vibration or working noise.

Note: When the HDC is working, do not shift to N gear, since this operation will deactivate the HDC function.

HDC is disabled by default. When the Start switch is in ON/RUNNING/READY state, the function can be enabled by operating the HDC switch on the entertainment display.

HDC system has four states as follows:

1 Standby:

Tap the HDC switch on the entertainment display. The HDC system will be enabled and will enter the Standby mode. In this state, the indicator on the instrument pack will illuminate in green.

2 Parking:

In Standby mode, when the vehicle drives on the acute downhill surface at low speed, if the driver does not depress the brake pedal or the accelerator pedal, the HDC system automatically enters the Parking state. Meanwhile, the indicator on the instrument pack flashes in green, which may be accompanied by the working noise of the brake system. The vehicle will then drive down the acute downhill surface smoothly.

3 Temporary Deactivation:

Depress the accelerator pedal or brake pedal to a certain extent when parked. The HDC system will temporarily remove itself from the Parking state.

4 OFF:

Tap the HDC switch on the entertainment display again and the HDC system will be disabled.

Note: When the HDC is in use, if the speed is greater than a certain value, the HDC function will be disabled.

Note: When the vehicle makes a sharp turn on a certain slope, HDC may switch from Standby to Operating.

Note: With HDC operative, the brake system will automatically pressurise and hold. You will be responded with a certain pressure feedback when depressing the brake pedal at this time, which is normal.

Active Rollover Protection (ARP)

The ARP system is a driver aid to assist the stability of the vehicle. It is not a guarantee that the vehicle will not roll over.

When the vehicle is at risk of rollover during dynamic driving (such as lane change) or steady driving (such as loop driving), the ARP will automatically brake the outside wheels to cause the vehicle to understeer and prevent rollover.

Note: With ARP in use, should the vehice under-steer, it is normal if the vehicle does not steer in accordance to the driver's expectations.

Emergency Braking Hazard Warning Strobe (HAZ)

If the driver makes an emergency braking manoeuvre and certain conditions are met while driving, the brake lamp will automatically strobe to alert the drivers behind, thereby reducing the occurrence of rear-end collisions.

Note: If the hazard warning lamps are being operated manually, this suspends the HAZ function.

After the HAZ function is activated, when the emergency braking manoeuvre is exited, the brake lamp will stop strobing after several seconds.

Note: As the car speed drops to below 6 mph (10 km/h) and the system no longer flashes the brake lamps, the hazard warning lamps will illuminate automatically. Short press the hazard warning lamp switch or increase your speed to above 12 mph (20 km/h) for 5 s to switch off the hazard warning lamps.

Tyre Pressure Monitoring System (TPMS)

TPMS can not replace routine maintenance and checks of the tyre condition and pressure.

Using equipment that transmits on frequencies similar to that of the TPMS may interfere with the operation of the Tyre Pressure Monitoring System, this may illuminate a warning or register a temporary fault.

TPMS monitors the tyre pressure through radio wave and sensing technique. The TPMS sensor can monitor the pressure of the vehicle's tyre and send it to a receiver in the vehicle. You can view the tyre pressure on the on-board entertainment display. TPMS can remind you of low tyre pressure, but it can not replace normal tyre maintenance. For tyre maintenance, please refer to 'Tyres' in the 'Maintenance' chapter.

Note: TPMS only gives the driver a warning when the tyre pressure is low, it will not inflate the tyre.



If the TPMS malfunction indicator lamp illuminates, and the warning message 'XX Tyre Pressure Low' is displayed, it is advised that you please stop the car as soon as possible, check the tyre pressure when they are cold and inflate the tyre to the standard pressure value. The tyre pressure label attached to the B pillar indicates the standard pressure value required by your vehicle tyres when they are cold.

Driving with under-inflated tyres may overheat and cause the tyre to fail. In addition, insufficient inflation will also decrease fuel economy, shorten the life of wheel tread and may affect the operational performance and brake performance of the vehicle.

TPMS Self-learning

When replacing a TPMS sensor or receiver, or performing tyre rotation, the TPMS self-learning is required. The self-learning can be performed by the following means for some vehicles:

1 The vehicle is powered off and locked for 25 minutes.

2 Drive continuously for 15 minutes with the vehicle speed exceeding 21.7 mph. Please take more turns while driving.

Note: Ensure that the TPMS sensor is an original factory component.

Note: If self-learning fails, the TPMS malfunction indicator lamp will illuminate, please try repeating the above operations.

Please consult a local MG Authorised Repairer if you have any doubt during self-learning.

Comfort Systems

Seat Adjustment *202*
Ventilation System *208*
Front A/C Panel *212*
Rear A/C Panel *215*
Intelligent Display *218*

Seat Adjustment

Front Seats

The front seats of this series of models are all electric seats. Depending on the different vehicle configurations, their functions may be different.

Power adjustment (with the driver side as an example)

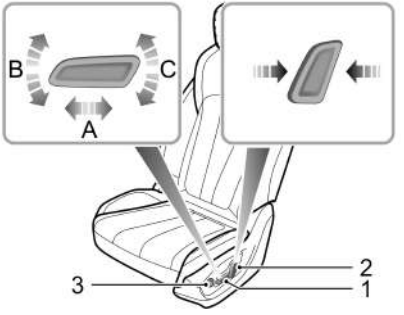

- Forward/rearward seat adjustment
  Push the switch (1) along the direction of A to adjust the seat forward or rearward.
- Cushion angle adjustment
  Move the switch (1) along the direction of B to adjust the angle of the front cushion angle.
- Cushion height adjustment
  Move the switch (1) along the direction of C to adjust the cushion height.
- Backrest angle adjustment
  Move the switch (2) forward/backward to adjust the backrest angle.
- Lumbar support adjustment*
  Long press the four directions of the switch (3) to adjust the lumbar support to a desired position.

Second-row Seats

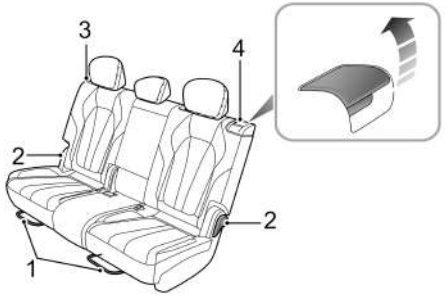

- Forward/rearward seat adjustment

  Lift the lever (1) to slide the seat forward and backward to an appropriate position; then release the handle to make sure that the seat is locked in position.
- Backrest angle adjustment

  Lift the handle (2) to adjust the backrest to an appropriate angle; then release the handle to make sure that the backrest is locked in position.
- Backrest folding

  Lift the handle (2) till the backrest is fully folded.
- Entry/exit of third-row passengers

  To facilitate the entry and exit of the third-row passengers, larger space can be obtained through the following two methods:

  

  Press the switch (3), the right seat backrest will automatically incline forward and then manually move the seat to the frontmost position.

  Pull up the unlock handle (4), manually incline the left seat backrest forward and move the seat to the frontmost position.

  After the third-row passengers enter and exit, press the switch (3) again to restore the right seat to its original position; or pull up the unlock handle (4) to manually restore the left seat to its original position.

The lower end of the backrest of the second-row right seat is equipped with an emergency escape strap. In emergency situations, the third-row passengers can pull the emergency escape strap with force to unlock and move the second-row right seat.

- Backrest folding

  To increase the luggage space, the second-row seat backrest can be fully folded forward.

  When folding the backrest, first fully lower (or remove) all the headrests of the second-row seats, and then pull up the backrest adjustment handle (2) until the backrest is fully folded forward.

  When unfolding the backrest, pull up the backrest adjustment handle (2) again, manually lift the backrest to the appropriate position and ensure that the backrest is locked in place.

Note: When fully folding the seats, you should completely lower down (or remove) all head restraints of the second-row seats first; otherwise the back of the front seats, centre console armrest box or head restraints of the second-row seats may be easily damaged if the head restraints are not fully lowered or the backrest of the front seat is inclined backward excessively.

Note: When returning the second-row seat backrest to the desired position, make sure that the second-row seat belt is not trapped.

Third-row Seats

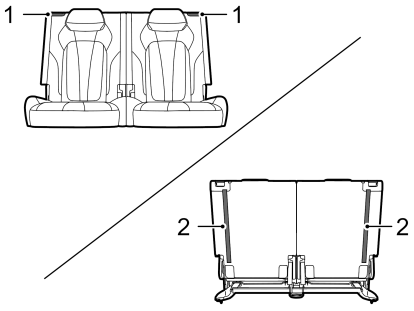

- Backrest angle adjustment
  Lift the handle (1) or pull the strap (2) to adjust the relevant backrest to an appropriate position; then release the handle or strap to make sure that the backrest is locked in position.
- Backrest folding
  To increase the luggage space, the third-row seat backrest can be fully folded forward.

  To fold the backrest, first fully lower (or remove) all the headrests of the third-row seats, and pull the handle or strap of the relevant backrest to unlock it, then push the backrest forward to fold.

  To unfold the backrest, pull up the handle or strap again to unlock it, then push the backrest to an appropriate position and make sure that the backrest is locked in place.

Note: When the head restraint of the third-row seat is not fully lowered or the backrest of the second-row seat is inclined backward excessively, the folding of the third-row seat is very likely to damage the back of the second-row seats or head restraint of the third-row seat.

Note: When returning the third-row seat backrest to the desired position, make sure that the third-row seat belt is not trapped.

Head Restraint Operation

Adjust the height of the head restraint so that the top of it is in line with the top of the occupant's head. This location may reduce the risk of neck injuries in the event of a collision. Do not adjust or remove the head restraints while the car is moving.

Do not hang anything on any head restraint or head restraint rod.

The head restraint is designed to prevent rearward movement of the head in the event of a collision or emergency braking, thereby reducing the risk of head and neck injuries. The height of split type head restraint can be manually adjusted.

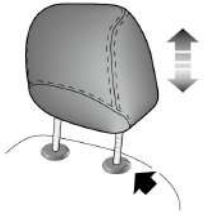

When adjusting a head restraint from low to high position, pull the head restraint directly upward, and gently press it downward after it reaches the desired height to make sure that it is locked in position. To remove the head restraint, press and hold the guide sleeve button (as indicated by the arrow) on the left of the head restraint, then pull the head restraint upward to remove it.

When adjusting a head restraint from a high to low position, press the guide sleeve button (as indicated by the arrow) on the left of the head restraint and press the head restraint downward; release the button after it reaches the desired height and gently press the head restraint downward to make sure that it is locked in position.

Seat Ventilation Function*

Depending on the vehicle configurations, some models have a ventilation function in the front seats which have 3 levels of intensity. The function can only be activated after the vehicle has been started and can be turned on or off through the air conditioning control interface in the entertainment screen. The ventilation level can also be adjusted on the air conditioning control interface in the entertainment screen.

Seat Heating Function

If bare skin is in contact with the heated seats for excessive periods of time, it may cause burns.

Depending on the vehicle configuration, the front seats in some models have a heating function with 3 levels of intensity. This function can only be activated after the vehicle has been started and can be turned on or off through the air conditioning control interface in the entertainment screen. The heating level can also be adjusted on the air conditioning control interface in the entertainment screen.

IMPORTANT

- Do not cover the heated seats with blankets, cushions or other insulation type objects or materials.
- When the seat heating function is used for an extended period of time, if the seat exceeds certain temperature and continues getting hotter, please turn off the heating switch and contact an MG Authorised Repairer.
- Overuse of the driver's heated seat may cause drowsiness and could affect safety.

Ventilation System

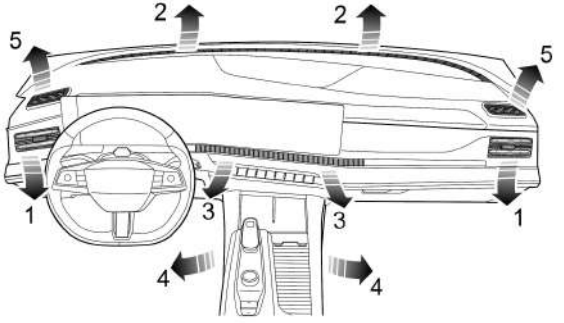

1 Side Vents
2 Front Windscreen Vents
3 Centre Vents
4 Front Seat Feet Vents
5 Front Window Side Vents

There are also 2 rear seat feet vents, respectively on the floor under the front seats (not shown in the figure).

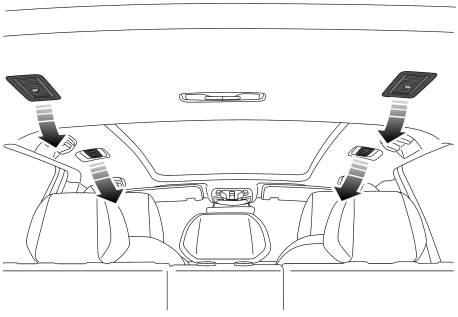

Second-row/Third-row Upper Vents



Third-row Feet Vents

The A/C system is used to adjust the temperature, speed, humidity and cleanness of the air inside the car. Fresh air is drawn in through the air intake grille under the front windscreen after being filtered by the A/C filter element. Always keep the air intake grille clear of obstructions such as leaves, snow or ice.

A/C Filter Element

The A/C filter element is used to filter the air. To remain fully effective, the filter element should be replaced at the recommended service interval.

Vents

Regulation of Centre Vents

The centre vents are electric air vents, including the left (driver side) air vent and the right (passenger side) air vent. The air vents on the driver side and passenger side can be regulated separately on the entertainment display.

Regulation of Side Vents

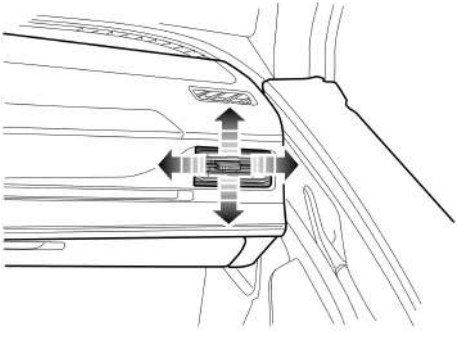

Toggle the knob in the centre of the louvres from side to side to open or close the vent. Direct the air flow by moving the knob up and down, or from side to side.

Second-row/Third-row Upper Vents Adjustment

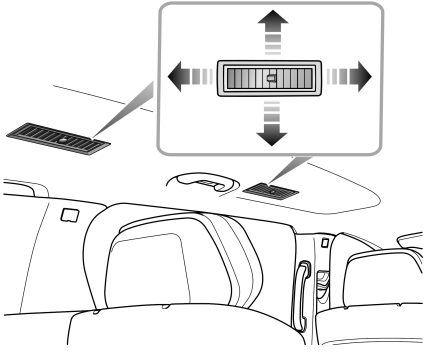

Toggle the knob in the centre of the louvres from side to side to open or close the vent. Direct the air flow by moving the knob up and down, or from side to side.

Front A/C Panel

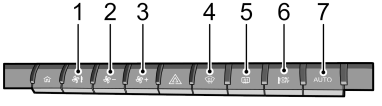

1 Front A/C Interface Shortcut Button
2 Front Blower Speed Decrease Button (-)
3 Front Blower Speed Increase Button (+)
4 Defrost/Demist Button
5 Heated Rear Window Button
6 Front A/C On/Off Shortcut Button
7 Front Automatic Temperature Control Mode Button

Front A/C Interface Shortcut Button

Press the Front A/C Interface Shortcut button to turn on/off the front A/C control interface.

Front Blower Speed Decrease Button (-)

Press the Front Blower Speed Control button (-) to reduce the blower speed on the driver side and front passenger side.

Front Blower Speed Control Button (+)

Press the Front Blower Speed Control button (+) to enhance the blower speed on the driver side and front passenger side.

Defrost/Demist



Press the Defrost/Demist button, the A/C cooling On/Off will illuminate and the system will enable the Defrost/Demist function to clear the mist or frost on the front windscreen and front window.

Activate the heating function of the washing nozzle simultaneously*.

Pressing the Defrost/Demist button again will exit the defrost/demist function, simultaneously turning off the heating function of the washing nozzle* and the system will return to the previous state.

When the Defrost/Demist function is selected again, the system will stop this function.

Note: When the temperature is below a certain value, enabling the defrost/demist function will simultaneously enable the heated rear window function. The Defrost/Demist and Heated Rear Window button indicator will illuminate at the same time.

Heated Rear Window



The heating elements on the inside of the rear screen are easily damaged. DO NOT scrape or scratch the inside of the glass. DO NOT stick labels over the heating elements.



Pressing the 'Heated Rear Window' button will allow for the heating elements on the rear windscreen to begin operation, this will be conveyed by the indicator in the button which will illuminate.

The heated rear window function will automatically turn off after operating for 15 minutes. Operating the rear heated window function for a second time within 5 minutes will automatically turn of after heating for 8 minutes. When the heated rear window is in operation, press the button again to turn off the heating function. The indicator in the button will go out.

Note: The heated rear window function can work only when the vehicle is started.

Front A/C On/Off Shortcut Button



Press the Front A/C On/Off shortcut button on the front A/C control panel to turn on/off the front A/C system.

Front Automatic Temperature Control Mode Button



After setting the desired target temperature, press the Automatic Temperature Control Mode button on the front A/C control panel to activate the front automatic temperature control mode.

In this case, the air distribution mode and the blower speed at the driver side and front passenger side are automatically adjusted to reach and maintain the required temperature.

Note: To ensure the automatic temperature control function operates normally, all windows and the sunroof must be closed and the A/C intake grille must be clear of obstruction.

The air distribution mode and blower speed can be adjusted manually according to personal habit and demand. In this case, the AUTO indicator will extinguish.

Rear A/C Panel

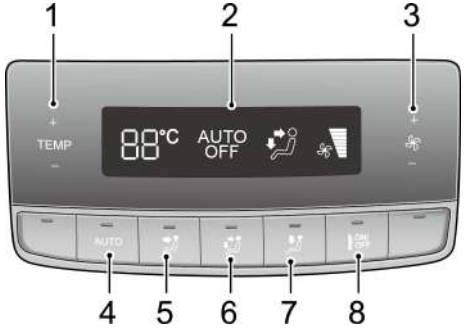

1 Rear Temperature Control
2 Rear Control Panel Display
3 Rear Blower Speed Control
4 Rear Automatic Temperature Control Mode Button
5 Rear Face Mode Button
6 Rear Face/Feet Mode Button
7 Rear Feet Mode Button
8 Rear A/C System On/Off Button

Rear Temperature Control

Touch the Temperature Control button on the rear A/C control panel to adjust the air outlet temperature for the second/third-row passengers.

Rear A/C Control Panel Display

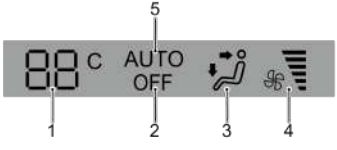

1 Rear Setting Temperature Display

2 Rear A/C System OFF Display

3 Rear Air Distribution Mode Display

4 Rear Blower Speed Display

5 Rear AUTO Mode Display

Rear Blower Speed Control

Touch the Blower Speed Control button on the rear A/C control panel to adjust the blower speed for the second/third-row passengers.

Rear AUTO Mode



After setting the desired target temperature, press the rear AUTO Mode button on the rear A/C control panel to activate the AUTO mode of the rear A/C system.

In this case, the air distribution mode and the blower speed at the rear passenger side (second/third-row) are automatically adjusted to reach and maintain the required temperature.

Note: To ensure the automatic temperature control function operates as normal, all windows and the sunroof must be closed and the A/C intake grille must be clear of obstruction.

The air distribution mode and blower speed can be adjusted manually according to personal habit and demand. In this case, the AUTO indicator will extinguish.

Rear Face Mode Button



Press the Face button on the rear A/C control panel to switch the Rear Air Distribution mode to Face mode, guiding the airflow of the second/third-row upper vents.

Rear Face/Feet Mode Button



Press the Face/Feet button on the rear A/C control panel to switch the Rear Air Distribution Mode to Face/Feet mode, guiding the airflow of the second/third-row upper and lower vents.

Rear Feet Mode Button



Press the Feet button on the rear A/C control panel to switch the Rear Air Distribution mode to Feet mode, guiding the airflow of the second/third-row lower vents.

Rear A/C System On/Off Button



Press the A/C System On/Off button on the rear A/C control panel to turn on/off the A/C system.

Intelligent Display

Main System Interface

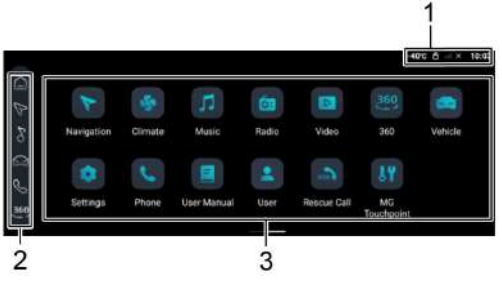

1 Status Bar
It displays outside temperature, time, etc.

2 Menu Bar

3 Application

For more information, please refer to the 'Entertainment Navigation Manual'.

Note: The images in this chapter are for reference only. According to different vehicle configurations, software versions and market regions, the content displayed on the interface may vary. Please refer to the actual vehicle interface diagram for accuracy.

Map and Navigation

Select [Map] on the main interface to enter the Map interface, which supports positioning, search, path planning, navigation and other functions.

Note: Applying metal film on the front windshield of a vehicle may affect communication and navigation signals inside the vehicle.

Note: Regularly update the map date to maintain the performance of the speed limit assistance system. For detailed upgrade process, please contact an MG Authorised Repairer.

Intelligent Driver Assistance

Intelligent Driver Assistance Description 221

Cameras and Radars 223

Adaptive Cruise Assist (ACC) 228

Intelligent Cruise Assist (ICA) 237

*Intelligent Overspeed Alarm** 241

Forward Collision Assist 244

Lane Departure Assist 248

*Speed Limit Assist** 252

Blind Spot Safety Assistance (BSD, LCA) 257

Backward Traffic Assist (RCTA, RCTB) 259

Rearward Collision Warning (RCW) 261

Door Opening Warning (DOW) *262*
Ultrasonic Sensor Parking Assist System *264*
360 Around View *266*
Driver Monitoring System *268*
MG Pilot Customisation *269*

Intelligent Driver Assistance Description

Intelligent Driver Assistance Disclaimer

In order to use the intelligent driver assistance functions, the user and the driver must pay special attention to, understand and accept the following:

1 All currently available intelligent driver assistance functions require the driver to actively monitor and take over the entire driving process. The user must be aware the vehicle is not automated. The safety and reliability of these functions will need to be demonstrated by more driving miles in order to reach a level of driving that far exceeds that of a human driver. The realisation of autonomous driving is also dependent on legal regulations and administrative approvals (which may take longer in some jurisdictions). As these intelligent driver assistance functions evolve and improve, your vehicle will be updated and upgraded in a feasible manner (whichever is feasible for your vehicle's software and hardware at that time).

2 Users and drivers should carefully read, study, understand and implement the contents of the corresponding Owner's Handbook. The user should also operate and service the vehicle (and the related functions) in accordance with the requirements therein (in particular, the descriptions of the function modules and restrictions on the use of the Intelligent Driver Assistance and the Intelligent Cockpit). Users and drivers should always bear the responsibilities and obligations stipulated in the Road Traffic Safety Law and other laws and regulations. The driver must also maintain full control of the vehicle ensuring they maintain control over the steering wheel and brakes. The user or the driver MUST bear all the responsibilities and consequences of any personal or property damage caused by the user's or the driver's faults (e.g., failing to use the vehicle in accordance with the requirements of the Owner's Handbook, or failing to take over the steering wheel and/or the brakes at any time in accordance with the requirements of the Road Traffic Safety Law, etc.).

3 Intelligent driver assistance functions can only play an auxiliary role under certain conditions,

and cannot replace the driver's observation of the road conditions. The driver should drive with caution and should not rely on this function. The Owner's Handbook has already fulfilled its obligation to clearly explain the various limitations on the use of each auxiliary function (i.e., under what circumstances certain functions may not be activated, or may stop working).

4 Intelligent driving assistance functions have requirements on the weather, road surface, driver operation and other objective conditions, and may fail, be inappropriate or untimely under the influence of a number of factors, which is not equivalent to the existence of design and application defects in the product. If any user or driver cannot understand or accept the content of the above terms, please do not use the relevant intelligent driver assistance function. If the function has been turned on, please switch it off immediately.



Camera and radar operation may be impaired in certain driving situations, weather and road conditions. In areas where there are complex traffic conditions such as intersections road junctions with congestion or poor general conditions, the driver MUST take full control of the vehicle.

The intelligent driver assistance system, through cameras, are able to detect road and environmental information in front of the vehicle and, when certain conditions are met, provide warning messages or intervene in the vehicle in order to assist the driver in maneuvering the vehicle in a safer and more reliable manner.

Note: DO NOT operate any infotainment switches whilst driving. If you wish to make any settings changes, please pull over when it is safe and legal to do so.

Cameras and Radars

Driver assistance camera

The vehicle is equipped with the following visual cameras: Surround view cameras and Front-view camera module (The details are subject to the actual vehicle configuration) .

The camera performs object recognition in a visual form, After identifying targets within the perimeter of the vehicle, Provide identifying information for related functions.

The location where the camera is mounted

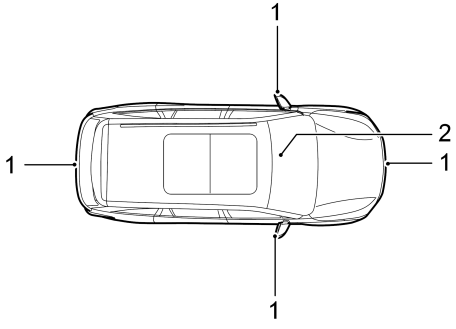

1 Surround view camera

2 Front-view camera module

Note: The configuration of cameras are subject to the specification of the vehicle purchased.

Note: To ensure that the front view camera works correctly always keep it clean and free of ice, snow, water, dust, etc.

Note: To ensure the camera works properly, always keep the windshield in front of the camera clean with no objects blocking the view between the camera and the windshield.

Note: Please wipe camera lenses with a soft cloth or wash with water (of low pressure) when foreign objects are found on the camera surface. Do not use a high pressure water jet to flush the camera and do not use abrasive or sharp objects to clean the camera.

Calibration of the camera

Except for MG Authorised service center personnel; others are strictly forbidden to disassemble, assemble and replace the camera module. The front camera module must be recalibrated in the following cases:

- The module has a malalignment fault, if the camera position has changed;
- Disassemble and assemble the camera or camera mount;
- Disassemble and remove the front windscreen;
- Changes in vehicle wheel alignment parameters.

Note: If the front detection radar is subject to strong vibration or slight impact, the mounting position of the front detection radar needs to be checked and re-calibrated as necessary.

Note: Please consult an MG Authorised Repairer for more details about camera calibration.

Camera detection performance will be affected in the following scenarios:

- The camera is defaced or clearly obscured by foreign objects; Ice, snow, mud, Dust-covered situation.
- Poor visibility or bad weather (heavy rain, snow, fog, haze, smoke, Dust, sandstorms, etc).
- Evening, Night time, Unlit tunnels and other poor light conditions.
- Sanitation vehicles at work on the bypass, Sprinkler trucks (water spraying operations); poor weather conditions and mist/spray from other vehicles, unpaved pavement, constructions areas etc.
- Bright light (Such as oncoming headlights, Rear headlights or direct sunlight) Obstructing the camera's field of view.
- The light is intense, When the sun is obliquely shining and the light is too much (backlighting is common at high altitudes).

- Driving through an area where the street lights are flickering or rapid changes between light and dark (such as tunnel entrances and exits).
- The vehicle is driving on a highly reflective surface, For example, after the rain, Snow and other strongly reflective conditions.
- Extremely hot or extremely cold weather temperatures can interfere with or affect sensor performance to some extent.
- The camera's field of view is partially or completely occluded, If there is a stain on the front glass, Gum, greasy dirt, stickers, etc, covered by foreign matters, such as a decorative strip, stickers etc. which block the cameras field of view. The outside of the front windscreen was not cleaned in time with water spraying.
- The windshield is cracked or cracked within the camera's field of view or has other variations that affect the optics.
- The wiper speed cannot keep up, or the wiper blade is worn and aged and the camera's field of view cannot be cleaned, there are water stains in the sensor's field of view, scratches and/or water marks in the camera's field of view.
- Rainy and humid conditions, The front windshield defogging and defrosting is not very effective.
- The camera is not fixed in place or is not securely held or the fixed structure itself is shaky.
- Disassembly, Not calibrated after replacing the camera.

Driver assistance radar

The vehicle is equipped with the following radars: Ultrasonic radar, Millimeter-wave radar (The details are subject to the actual vehicle configuration) .

The radar is used only after detecting targets within the perimeter of the vehicle, Provide identifying information for related functions.

Radar installation location

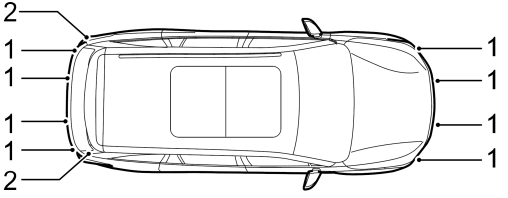

1 Ultrasonic radar

2 Millimeter-wave radar

Note: The configuration of the radars is subject to the vehicle purchased.

Note: To ensure that the radars work correctly, always keep them clean and free of ice, snow, water, dust, etc.

Note: Please wipe with soft cloth or wash with water (of low pressure) when foreign objects are found on the radar surface. Do not use a high pressure water jet to flush the radar and do not use abrasive or sharp objects to clean the radar.

Radar detection performance will be affected in the following situations

- The radar or bumper is covered with a foreign object, Like snow, ice, mud, sewage, adhesive tape, ornaments, etc.
- The bumper is painted and sprayed without permission.
- The radar or bumper is damaged or the installation position is changed.
- Subject to electromagnetic interference from other devices.
- Small, enclosed environment, Such as ferries, Three-dimensional garage, etc.
- The vehicle is in a tow trailer state.
- In an open field (such as an empty car park) and open roads. The detection performance of the radar may be limited and may not work correctly.

Note: Any snow on the radar should be removed with a brush, while any ice is preferably removed with a deicing spray.

Adaptive Cruise Assist (ACC)



The adaptive cruise control system is designed as a comfort system. It provides assistance to the driver, but DOES NOT replace any of the driver's responsibilities. When using the adaptive cruise control system, it is important that the driver maintains concentration at ALL times and is prepared to take action. Otherwise, accidents or personal injuries may occur.

Depending on whether there is a vehicle ahead, Adaptive cruise control automatically switches between cruise control and cruise following. Take advantage of adaptive cruise control, It can make the vehicle cruise at a fixed speed within a certain speed range, It is also possible to set the time distance between the vehicle and the vehicle in front to follow the cruise. If a vehicle is detected in your driving path, Adaptive cruise control may apply moderate braking or acceleration, to maintain the selected following interval.

Note: The adaptive cruise control system is designed for highways and roads in good condition. It is recommended that it is NOT used on urban roads and mountain roads.

Adaptive cruise activation



After following the vehicle ahead to a stop, the driver must ensure that there are no obstacles or other traffic participants, such as pedestrians,directly in front of the vehicle before starting off to follow the vehicle ahead again.



Whilst using the car following cruise function, it is strongly recommended that the driver does not touch the accelerator pedal. Any activation of the accelerator will not allow the adaptive cruise control system to automatically apply the brakes. The vehicle will only controlled by the driver's manipulation of the accelerator pedal.

DO NOT exit the vehicle when the ACC system keeps the car stationary. Before leaving the vehicle, always shift to P gear and power off the vehicle.

If the adaptive cruise control system is holding the car stationary, the driver still needs to pay full attention and be ready to apply the brakes manually. Note that if the system is disabled, turned off or cancelled, the vehicle will no longer stay still, it may move forward or slip backward.

When driving on a bend, the adaptive cruise control may actively reduce the vehicle speed to maintain vehicle stability and safety.

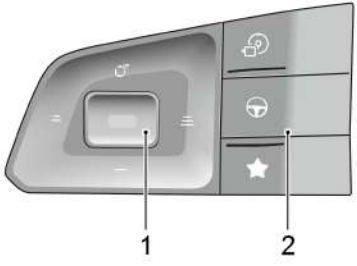

1 Adjust the dial

2 Pilot switch

Short press on the left side of the steering wheel pilot switch (2), the ACC function will be turned on but be in an inactive state. Press the pilot switch again and the ACC function will turn off.

Press and hold the pilot switch (2), this will allow you to switch between ACC and ICA.

Short press Pilot Switch (2), the adaptive cruise control icon is displayed on the instrument pack.

At this time , the ACC system be in an inactive state, adjust the dial (1) to activate the adaptive cruise control, the adaptive cruise control icon will illuminate in the instrument pack in blue. When the ACC is activated, the target speed is the actual speed at which it was activated. (For example, if the speed of the vehicle is less than 20 mph (30km/h), then the target speed is the same].)

The maximum speed for the adaptive cruise control is 93 mph (150km/h). If the speed of the vehicle in front is greater than the target speed, the car will maintain the target speed for cruise control. If the speed of the vehicle in front is less than the operating vehicles speed, the vehicle will enter the 'following cruise'. A schematic diagram of the rear of the vehicle in front will be displayed on the gauge. When cruising with a car ahead, the vehicle will be able to follow the car to a stop. If the car ahead is stationary for a certain time, the vehicle will continue to follow the vehicle in front. If the car ahead is stationary for a certain period of time, the driver will need to reactivate the ACC according to the prompts on the instrument pack.

Note: If the stability control system (SCS) or the traction control system (TCS) is manually turned off, the ACC will not be activated.

Adaptive cruise target following interval adjustment

When the adaptive cruise control system is activated, Toggle the adjustment knob to the right (increasing the space between the vehicle in front) or toggle the adjustment knob to the left (to reduce the spacing). The car following intervals have 3 levels of adjustment both near and far which are also displayed on the instrument pack.

Select the appropriate following distance when using ACC. For example, the higher the relative speed, the farther away the following distance should be. Please take into account traffic and weather conditions. The range of following intervals may not be suitable for all drivers and driving conditions.

Adaptive cruise target speed adjustment

When adaptive cruise control is activated:

- Use the accelerator pedal to reach the desired speed, Press the adjustment knob (Icon 1), release the accelerator pedal and the vehicle will cruise at the desired speed.
- Toggle the adjustment knob up or hold it, the target vehicle speed will increase until the desired setting speed appears on the meter, then release the adjustment knob. When it is determined that there is no vehicle in front or that the vehicle in front is out of the pre-selected following interval, the speed of the vehicle will be increased to the set speed.
- Toggle the adjustment knob down or hold it, the target speed will be reduced until the desired speed is displayed on the meter. Release the knob and the speed of the vehicle will be reduced to the set speed.

Note: If the vehicle ahead continuously makes hard acceleration or deceleration, the ACC system may not be able to maintain the following distance accurately, the driver must pay attention and perform operations such as braking or lane change in time according to the surrounding environment.

Turning adaptive cruise control OFF

When adaptive cruise control is active, Short press the pilot switch. This will switch the adaptive cruise control off.

Adaptive cruise automatically exits activation

In the following cases; adaptive cruise control may automatically turn off, the driver is therefore required to control the vehicle.

- Short press Pilot switch;
- Press the brake pedal when not stationary;
- Engage the vehicle in R, N or P gear;
- The driver unbuckles his seat belt;
- Press the accelerator pedal for more than a preset;
- Open either door, front bonnet or rear tailgate;
- Pull up EPB switch;
- Follow the car in front to a stop and be stationary for more than a certain amount of time;
- Cameras or radars are occluded, or the surrounding environment triggers a safe exit mechanism for the sensor, or a system failure.

Note: If following the vehicle ahead to a stop with the adaptive cruise control system enabled, if any of the following conditions occur whilst the vehicle is in a stationary state, the EPB will automatically be applied:

- ***The driver unfastens the seat belt;***
- ***The driver door is opened;***
- ***The stationary time exceeds the preset time period.***

Adaptive cruise reactivation

To reactivate the adaptive cruise function whilst the system is in standby (indicated by the white light on the instrument pack being lit), Push the adjustment knob upwards, the target speed of the cruise control will be the target speed before the adaptive cruise assist had been exited.

Adaptive cruise override

If the driver actively presses the accelerator pedal while the adaptive cruise control is activated, the speed of the vehicle will be controlled by the accelerator pedal and may be higher or lower than the previously set target cruising speed. When the accelerator pedal is released, Adaptive Cruise Assist will return to operating at the previously set target cruise speed.

Clear the target speed memory

The target speed memory can be cleared by turning off the adaptive cruise control, clearing the memory and powering off the vehicle.

Description of limited functionality

This includes, but is not limited to, the following:, While turning on Adaptive Cruise Assist, But the functionality is limited, Adaptive cruise may not respond, Delayed or abnormal response:

- Encountering a vehicle or object that is stationary or across a carriageway;
- Encounter pedestrians, or animal ;
- Encounter a trolley or two wheeled objects such as suitcases;
- Encounter a pedestrian bystanding, Vehicles obscured by objects, etc;
- Encounter a vehicle with the tailgate or door open;

- Encounter a vehicle with a strong reflection at the rear;
- Encounter an abandoned vehicle;
- Encounter the car in front of the extra-wide lane;
- Oncoming car in front or emergency braking;
- A vehicle traveling backwards ahead;
- The vehicle suddenly cuts in front;
- Encounter a vehicle traveling at a low speed;
- Encounter a vehicle with loaded items protruding from its body contours;
- Encounter vehicle being towed;
- Special vehicles (Such as taller container trucks, Rear strong reflective vehicle, Trailers, sprinkler trucks, etc);
- Approaching the car in front too quickly, The system does not apply the brakes sufficiently;
- Vehicles are driving on potholes or difficult traffic sections;
- The vehicle makes a sharp turn;
- Vehicles entering and exiting tunnels or driving inside tunnels;
- Vehicles drive in the shade of dappled trees;
- The luggage area of the car is overloaded and the nose is upturned.

Special driving environment

Adaptive cruise control has its limitations. Listed below are some of the situations that may exceed the safe operating limits, The driver should maintain control of the vehicle, vigilance must be maintained at all times, at the same time, special attention is paid to the traffic situation and the surrounding environment, choose the appropriate speed, always be ready to take any necessary measures.

1 When turning at an intersection or following a vehicle into or out of a curve, Adaptive cruise control may not be able to detect vehicles in front of you in the same lane, or may react to vehicles in the other lane.

Note: DO NOT use the adaptive cruise control system on entrance/exit ramps or sharp curves.

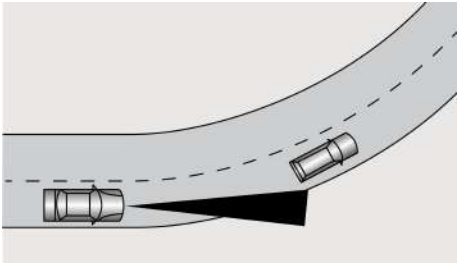

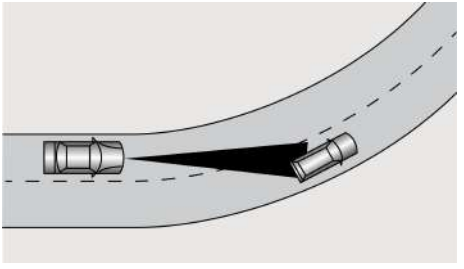

2 If the vehicle in front changes lanes, When you are not fully in the lane, the vehicle may not be detected by adaptive cruise control.
If the vehicle in front changes lanes when you are not completely out of the lane, Adaptive cruise control may judge that the vehicle in front has left and is speeding up.

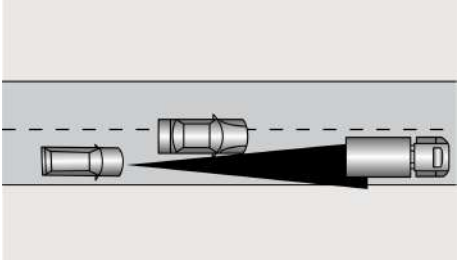

3 When driving on uneven roads, May include steep ramps or descents, Please do not use adaptive cruise control.

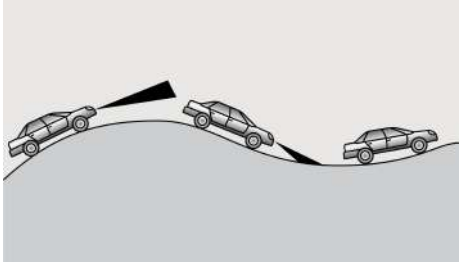

4 When driving behind a vehicle which overlaps your vehicle (A), the vehicle in front may not be detected by the adaptive cruise control system.

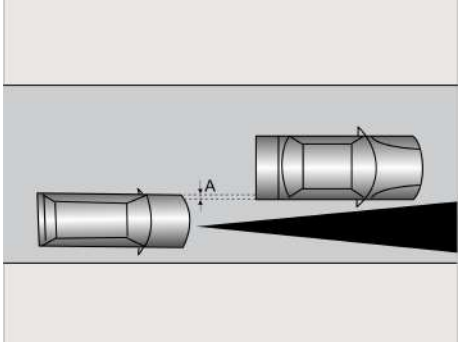

Note: Please DO NOT use the adaptive cruise control system in the following situations:

- *Driving in bad weather conditions;*
- *When the ambient light is insufficient, the light is too bright or the forward lighting of the vehicle is poor;*
- *Driving on rough or poor road surfaces;*
- *Driving through roadworks or construction sites;*
- *Driving on low friction roads (the rapid change of the tyre traction may result in the excessive wheel slip).*

Intelligent Cruise Assist (ICA)

Note: Intelligent Cruise Assist is an auxiliary feature, It can assist the driver, However, it cannot be used as a substitute for the driver. When you choose to use Intelligent Cruise Assist, There are limitations in system detection and control. The driver must always have the steering wheel in there hands, Be aware of your vehicle's surroundings, correct or take over steering wheel control if necessary. Failure to do so may result in an accident or personal injury.

Short press on the left side of the steering wheel pilot switch. THE ICA function will be turned on but in an inactive state, pressing the pilot switch again will turn the function off.

Pressing and holding the pilot switch will allow the user to switch between ACC and ICA .

ICA will operate once the following conditions have been met:

- Intelligent Cruise Assist is on;
- The system detects lane markings on the left and right sides of the vehicle;
- The vehicle is in Drive (D) gear gear.

Toggle the adjustment knob on the left hand side of the steering wheel to activate the intelligent cruise assist. Intelligent cruise assist works on the basis of Adaptive Cruise Control. If the lane markings on both sides are clear, the system will help the vehicle navigate within that lane marking; at low speeds, if there are other vehicles in front of you and the lane markings are not clear, the system will help the vehicle to follow the trajectory of the vehicle in front.

Note: When ACC is active and the above conditions are met, the ICA system can be activated without pressing the adjustment knob.

When the system detects that the driver has not been in continuous control of the steering wheel for a certain period of time, a warning will be issued to alert the driver.

Note: The driver shall adjust the vehicle speed and the following distance according to road visibility, weather, and road traffic conditions. The intelligent cruise assist (ICA) system does not respond to pedestrians, animals, stationary vehicles and vehicles that drive across the lane or oncoming vehicles on the same lane. If the system cannot reduce the vehicle speed sufficiently, the driver MUST apply the brake by depressing the brake pedal. If another vehicle cuts into the current lane under congested conditions, the system may not brake timely due to the fact that the cut-in vehicle does not enter its detection range. The driver must therefore actively apply the brake.

Intelligent Cruise Assist may not function in the following cases

- The driver turns on the turn signal;
- The driver turns on the hazard warning lights;
- The driver presses the accelerator pedal sharply, steers sharply or presses the brake pedal harshly;
- The system recognises that the driver has not been steering for a period of time;
- The driver operates the steering wheel while the system implements control;
- The lane markings are too thin, damaged or blurred;
- The vehicle is driving in a curve with a small radius of curvature, roads that are too wide or too narrow;
- When a vehicle has just entered a roadway with lanes or is driving through a roadway without lane markings;
- The vehicle is in reverse gear;
- The vehicle changes lanes or swings sideways too quickly;
- When driving along the trajectory of the vehicle in front, The turning radius of the car in front is too small;
- Anti-lock braking system (ABS), Dynamic Stability control (SCS) is active ;
- Anti-lock braking system (ABS), Dynamic Stability control (SCS), Electric power steering (EPS) and so on.
- Rain, snow, fog lights, low visibility, weather;
- When the light intensity is low at night;
- Direct sunlight; Backlit environment;

- Dust/Crosswind weather;
- The curvature of the road is excessive or there are sharp turns;
- The road width is too wide or too narrow;
- Lane markings are excessively worn or obscured, Overlapping road conditions between old and new markings;
- Road construction sections;
- Objects are projected onto the driveway, creating a large area of shadowed road sections;
- Sections without lane markings, such as non-standardised roads, construction area, etc;
- Special lane markings, such as deceleration warning lines, diversion lines, etc;
- The pavement has edges or other high-contrast lines, no lane markings, For example, pavement joints, kerb, Pavement road tracks, Old lines of the road surface that have not been erased, etc;
- There are text or traffic signs on the surface of the road;
- Complex terrain at road forks;
- Lane merging a diversion or special lane changes;
- Special roads such as tunnels;
- The road surface is in poor condition and has bumps in the road, is slippery, has cracks or the surface is icy;
- Uphill or downhill roads;
- Stationary or slow-moving vehicles ahead, Transverse vehicles;
- Special Vehicles, Such as damaged vehicles or irregularly shaped vehicles;
- Animals, walls and other unidentified objects;
- Crossing pedestrians, vehicle, bicycle, motorcycle, tricycle, and other oncoming vehicles;
- Static obstacles such as traffic cones, warning triangles etc;
- A vehicle cuts in too close in front;
- A vehicle exits the lane quickly ahead;
- Guardrails at ramp crossings or forks, anti-collision piers, etc;
- The front windshield is occluded (Water mist, Dust or sticker obscuration, etc);
- The camera is occluded;
- The camera won't focus;

- The camera cannot be calibrated;
- The low altitude of the sun creates glare;
- TRoad mist from other cars;
- Ice on the windscreen;
- Camera fails due to the field of view being obscured by rain, snow, fog etc or there is a fault within the system; In open fields/roads, the performance of the radar may be limited or it may not work correctly.

It is recommended to turn off Intelligent Cruise Assist in the following cases

- When driving the vehicle in a sporty manner;
- In case of inclement weather;
- When driving through inferior road sections;
- When driving through a road construction site;
- In steep, winding roads or slippery roads (such as ice and snow roads, Wet roads, Roads with stagnant water);
- When off-road or when driving a vehicle on an unpaved road.

IMPORTANT

- In cases where the number of lanes increase or lanes merge the driver MUST take full control of the vehicle.
- In areas where there are complex traffic conditions such as intersections or road junctions with congestion, the driver MUST take full control.
- The driver MUST be aware of the surroundings and be able to assume full control of the vehicle when using the traffic jam assist system to track the car in front should the need arise.

Intelligent Overspeed Alarm*

The intelligent speed assist system is an auxiliary function. It may display an incorrect speed limit value or no speed limit value in the instrument pack due to various factors. As a result, the vehicle speed is not restricted within the correct range. The driver still needs to observe the speed limit of the road traffic. Speeding is strictly prohibited, the driver must abide but all road traffic laws.

The front view camera cannot recognise speed limit signs painted on the road surface. The driver MUST observe these speed limits and adjust their speed accordingly.

The setting interface of the intelligent overspeed alarm is located on the entertainment display. The driver can turn on or off the system through the soft switch on the entertainment display. The vehicle detects the speed limit sign (e.g. ⑥⓪) on the roadside through the front view camera. When the vehicle speed is greater than the speed limit value in the speed limit sign speed indicator, the speed indicator blinks and an alarm tone emits to prompt the driver to control the vehicle speed.

When the intelligent overspeed alarm is activated, the speed limit sign speed indicator will illuminate. When the vehicle passes the first recognised speed limit sign, the speed limit sign speed indicator shows the real-time speed limit value. If the vehicle encounters a speed limit sign with the same speed limit value, the speed limit value in the speed limit sign speed indicator will not be updated.

Note: When the vehicle needs to change lane, make a turn or turn around at a junction and the driver uses an indicator in advance and slows down, the original speed limit value on the instrument pack will be reset until a new speed limit sign is detected. If the conditions are not met, the original speed limit value will be maintained and will not be reset. The driver MUST observe the speed limits and adjust their speed accordingly.

Intelligent overspeed alarm may not work properly or provide inaccurate information in the following situations:

1 The detection performance of front view camera is affected;

2 The vehicle is driven at a high speed;

3 The speed limit signs are blocked by the trees at the roadside, ice/frost, snows, dusts, etc; or the speed limit signs are placed improperly or damaged;

4 When there are multiple speed limit signs over the road or at the roadside, the overspeed alarm will be issued according to the highest speed limit value.

5 The speed limits stored in the map database are outdated or incorrect, etc.

Note: Regularly update the map date to maintain the performance of the speed limit assistance system. For detailed upgrade process, please contact an MG Authorised Repairer.

IMPORTANT

- The camera may not correctly recognise speed limit signs during poor lighting conditions, bad weather, non-standardised or sheltered speed limit signs or the camera's own restrictions which include the recognition of similar signs (e.g., recognise a weight limit sign as a speed limit sign or recognise a minimum speed sign as the maximum speed sign).
- The camera cannot identify the text provided below the speed limit sign, such as Auxiliary Lane, 100m Ahead, School Section, 7:00-10:00, etc. The camera will identify the speed limit sign with text as a normal speed limit sign.
- Some drastic and rapid steering operations made by the driver may be judged as changing lane or turning around at a junction by the system, resulting in the identified speed limit signs being cleared.
- In cases where a speed limit sign contains multiple speed limits. The camera may not identify all the speed limits.
- Regularly update the map to maintain the performance of the intelligent overspeed alarm system. For details about updates, please contact MG Authorised Repairer.

Forward Collision Assist



The driver remains responsible for the safety of the entire driving process, even if the vehicle is equipped with a forward collision system. The driver MUST pay full attention and drive carefully. As with all the driver assist systems, the forward collision system cannot prevent accidents or avoid collisions in all situations. The driver MUST always remain in control to avoid accidents or emergency situations.



Ensure the forward collision system or ignition/vehicle power system is switched off when being towed. If the forward collision system is enabled when the vehicle is being towed, adverse effects may affect the safety of your vehicle, the towing vehicle and the people around.



To avoid the occurrence of accidents, never specially test the functions of forward collision system.

The Forward Collision Assist switch is located on the entertainment display, Enter the corresponding interface of driving assistance to turn the system on or off.

Forward Collision Assist Alarm

When the vehicle is traveling within a certain speed range and the system detects there is a risk of a collision between the vehicle and the vehicle or pedestrian in front of the vehicle in the same lane, a warning will be issued reminding the driver to slow down in time. Maintain a relatively safe distance and speed from vehicles or pedestrians in front of you.

In the following cases:, An alarm may be issued:

- When the speed is greater than 4 mph (6km/h) and less than 93 mph (150 km/h) and the vehicle is close to a stationary or moving vehicle.
- When the speed is greater than 4 mph (6km/h) and less than 93 mph (150 km/h) and the vehicle is close to a pedestrian or two-wheeler.

Front Collision Assist Alarm and Brake

When the vehicle is traveling within a certain speed range and the system detects a risk of collision between the vehicle and the vehicle in front or a moving pedestrian in the lane, the system will issue an alert and will automatically slow down the vehicle to avoid a collision or mitigate it as best as possible. If the vehicle brakes to a complete stop, the vehicle will remain stationary for a short period of time. Control of the vehicle will then be handed back to the driver.

In the following cases:, The system may step in to automatically slow down the vehicle:

- The vehicle speed is greater than 4 mph (6 km/h) but less than 93 mph (150km/h) and is close to a stationary or moving vehicle.
- The vehicle speed is greater than 4 mph (6 km/h) but less than 93 mph (150km/h) and is close to a pedestrian or two-wheeler.

When the following prerequisites are met, The system may automatically slow down the vehicle:

- Dynamic Stability Control (SCS) and traction control System (TCS) are switched on and fault code free;
- The power system is functioning normally and without malfunctions;
- The camera or radar system is functioning properly and without malfunction;
- The vehicle is in drive or neutral gear;
- The vehicle airbag did not deploy;
- Seat belts are fastened and the doors are not open.

Note: In some cases, the driver may not predict and does not want to apply the brake, but if the forward collision assist system is applying strong brake force, the driver can temporarily cancel the system by firmly depressing the accelerator pedal or turn the steering wheel if it is safe to do so.

Forward Collision Assist is limited or non-functional, or issuing useless and ineffective

warnings or interventions in the following situations:

- Inclement weather, such as dense fog, heavy rain, heavy snow, dust, weather with low visibility such as sandstorms;
- Affected by light, such as at night and the effect of auxiliary lighting is poor and the field of view is backlit, direct light on the oncoming vehicle, rapid changes between light and dark (such as tunnel entrances and exits), The vehicle is driving on a highly reflective surface (If there is water or snow on the road surface on days with poor weather conditions), tunnel, inside the building, etc;
- The vehicle is driving in a poorly lit area, Such as in the evening, night time, tunnel, inside the building, underground parking, etc;
- The car in front is oncoming, crossing a lane or cuts-in suddenly;
- The vehicle in front is driving irregularly (such as driving across lane lines, etc) & and parking (such as stopping horizontally on the road);
- The vehicle in front is not in the same lane as the vehicle or is partially occluded;
- The vehicle in front is an irregular motor vehicle (such as modified cars);
- The front vehicle is a vehicle with a high chassis;
- The vehicle in front is a large vehicle and the distance is relatively close (such as tractors, Trailers, tractor, Mud trucks, sanitation operation vehicles, etc);
- The car in front is a rare means of transportation on the road (such as ox carts, horse-drawn carriages or other means of transportation, etc);
- The vehicle in front is a bicycle, motorcycle, Small wheeled objects (such as suitcases, Shopping cart or wheelchair, etc);
- The water raised by the wheels around the perimeter caused the contours of the car in front to be blurred;
- The vehicle in front does not have its rear lights on when driving at night or in a tunnel;
- The front taillights are full LED Light strips or other homemade lanterns;

- Driving the vehicle in an area where the street lights are flickering;
- The pedestrian is not directly in front of the vehicle or the pedestrian is not fully visible;
- Pedestrians who are not upright or children who are of low height, etc;
- Gather in the shade of a crowd or tree, pedestrians in the dark;
- Animals in front;
- Objects on the ground which cannot be recognised such as barricades, boulders etc;
- Signs, guardrails, bridges, buildings etc;
- The vehicle is driving on the hillside, Sections of bridges up and down or curves;
- The vehicle is in reverse gear;
- The vehicle is braking or accelerating sharply;
- The driver actively overtakes the vehicle;
- The time interval between braking with Forward Collision Assist is too short after the last forward collision assist system had operated;
- There is a related fault that affects the function trigger, For example, there is a malfunction in the body stability system, Abnormal signal verification of body related signals, etc;
- The camera is occluded or not clear (stains, frost) , start a new bulletpoint:
  The camera won't focus;
  The camera cannot be calibrated;
- Low altitude of the sun causing glare;
- Road Mist splashing;
- Icy Windscreen;
- Camera's field of vision is affected due to rain, snow, fog, other weather conditions or a fault in the system;
- The radar is obscured, malfunctioning or a fault has been detected in the system;
- Towing mode;
- An open field with only stationary objects (such as an empty parking lot), which may deteriorate radar sensor functionality.

Lane Departure Assist

The lane departure assist system is an auxiliary system, which can provide assistance to the driver but cannot replace the driver in driving. When using the lane departure assist system, the driver should always pay full attention, hold the steering wheel and be prepared to correct the steering wheel or take over the vehicle at all times, otherwise accidents or personal injuries may be caused.

The lane departure assist system does not always recognise lane lines or kerbs. Sometimes poor road surfaces, certain road structures or objects may be falsely recognised as lane lines or kerbs. When such situations occur, the lane departure assist system must be immediately turned off.

The lane departure assist switch is located on the entertainment display, Enter the corresponding interface of driving assistance to turn it on or off.

Lane departure assist alarm

The system detects the lane markings ahead when the following detection conditions are met:

- The feature is turned on;
- The speed of the vehicle is higher than 37mph (60km/h);
- Lane markings are clear and the system detects at least one lane marking.

If the wheel is about to drive over the line, an alert will be issued, to remind the driver to correct the direction in time and keep the vehicle within the lane markings. When the speed of the vehicle is less than 34 mph (55km/h) the lane departure assist system will stop.

auxiliary

The system detects the lane markings ahead, When the following detection conditions are met:

- The feature is turned on;
- The speed of the vehicle is higher 60 km/h(37mph);

- Lane markings are clear, The system detects at least one lane marking.

If the wheel is about to crimp the line, When the line has been pressed, The system will intervene and prompt by applying a corrective steering, Assists the driver in keeping the vehicle within lane markings, If the vehicle deviates too much, the alarm function will be triggered at the same time. When the speed of the vehicle is less than 55 km/h(34mph), The feature exits.

When the system intervenes multiple times over a certain period of time and when it detects that the driver is not keeping his hands on the steering wheel at all times, an alarm will be generated.

Emergency lane keeping

The system detects the lane markings ahead, Curbs or adjacent lane vehicles, When the following detection conditions are met:

- The feature is turned on;
- The speed of the vehicle is higher than 30 mph (48 km/h)
- Lane markings or curbs are clear, The system detects at least one solid line or curb or there is a vehicle approaching in the adjacent lane.

If the wheels are about to compact the line or drive onto the curb or when the vehicle deviates from the lane and is at risk of collision with oncoming or oncoming vehicles in the adjacent lane, The system will intervene and prompt the driver by applying corrective steering. This will assist the driver in keeping the vehicle within lane markings or making an emergency avoidance. If the vehicle deviates too much, the alarm function will be triggered at the same time. When the speed of the vehicle is less than 28 mph (45 km/h), the system will stop.

When the system intervenes multiple times over a certain period of time and when it detects that the driver is not keeping his hands on the steering wheel at all times, an alarm will be generated.

IMPORTANT

- In the case of increased lanes, lane merges, etc., the driver is required to take active control.
- In the case of complex traffic conditions (such as intersections, road sections with traffic congestion, etc.), the driver is required to take active control.

Lane Departure Assist is limited or does not work in the following cases:

- The driver turns on the vehicle's crimping side turn signal;
- The driver turns on the hazard warning lights;
- The driver presses the accelerator pedal sharply, Steer sharply or press the brake pedal deeply;
- The system recognizes that the driver has not been steering for a period of time;
- The driver operates the steering wheel while the system intervenes with steering ;
- The lane markings are too thin, Damaged or blurred ;
- There is a change in lane division, For example, when lane splits or merges and when driving on forks;
- The curb is irregular or broken ;
- The vehicle is driving in a curve with a small radius of curvature, Roads that are too narrow or too wide ;
- When a vehicle has just entered a roadway with lanes or is driving through a roadway without lane markings ;
- The vehicle changes lanes or swings sideways too quickly ;
- The vehicle is not in forward gear ;
- The speed of the vehicle is lower 55 km/h(34mph), or the speed of the vehicle is too high ;
- Anti-lock braking system(ABS) , Dynamic Stability Control(SCS) is active ;
- Anti-lock braking system(ABS) , Dynamic Stability Control(SCS) , Electric power steering(EPS) and so on.

It is recommended to turn off Lane Departure Assist in the following cases

- When driving the vehicle in a very sporty style ;
- In case of inclement weather;
- When driving through inferior road sections ;
- When driving through a road construction site;
- The camera is occluded or not clear(stains, frost) , The camera won't focus, The camera cannot be calibrated;
- Due to the low altitude of the sun, Glare, Road mist splashing, The windshield is icy, Failure of the camera due to damage to the camera's field of view due to rain, snow, fog, and other weather, or a system failure ;
- Trailer mode ;
- At night and at the same time, the auxiliary lighting effect is poor ;
- In and out of the tunnel(The light intensity changes too quickly).

Speed Limit Assist*

Speed Limit Assist

The speed limit assistance system is only an auxiliary function. In cases where the speed limit sign is not standardised or the front view camera is blocked, the wrong speed limit value or no speed limit value may be displayed on the instrument pack and the vehicle is not restricted in the correct speed range. The driver will remain responsible for real-time evaluation of the speed limit on the road.

The front view camera cannot recognise speed limit signs painted on the road surface. The driver MUST observe these speed limits and adjust their speed accordingly.

Speed limit assist only assists the driver in not exceeding the speed limit. Drivers need to keep an eye on actual traffic and vehicle conditions in real time. Conditions such as long downhill or uphill roads will require the driver to intervene and brake accordingly to keep the vehicle within the speed limit.

The speed limit assist setting button is the speed limit function button located on the left side of the steering wheel (displayed as 2 in the figure below). The driver can select the mode by pressing and holding the speed limit function key. The speed limit assist function can be activated by pressing 1 (as displayed below). The driver can change the mode by pressing and holding the speed limit function key (Intelligent and Manual):

1 Intelligent: The vehicle detects speed limit signs on the side of the road through the front-view camera (for example, 60). The driver can then actively intervene in managing the vehicle speed, ensuring it remains within the maximum allowable speed limit.

2 Manual: The driver sets the maximum speed limit via the button on the left side of the steering wheel whilst actively intervenes in controlling the vehicle speed. Ensure your speed is kept within the maximum allowable speed limit; please see 'Manual speed limit setting' as described.

Note: If the mode selection cannot be performed, please confirm that the cruise function in the entertainment display is OFF and try again.

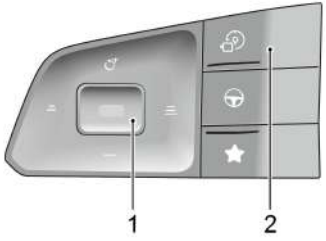

Manual speed limit setting

When manual speed limit is turned on, the target speed limit can be set by the button on the left side of the steering wheel, The details are as follows:

1 

When the manual speed limit mode is selected. The manual speed limit function is put into standby. The Speed Limit Assist indicator on the instrument cluster illuminates in white. Press the Settings buttonbutton (illustrated above as 1). When the manual speed limit is activated, the speed limit assist indicator will illuminate in blue. When the settings key is pressed for the first time, if the actual speed is lower than 18.6 mph (30 km/h), the target speed limit value displayed on the speed limit assist indicator is 18.6 mph (30km/h). If the actual speed limit is higher than 18.6mph (30km/h), the current speed is rounded up to the nearest 5 as the target speed limit. If the speed adjustment button is pressed (1), the target speed limit value for manual speed limiting can be adjusted. Pressing the button up or down will increase or decrease the target speed by

1mph (km/h). Press and hold the button up or down will increase the value by 5 mph. .

2 Once the manual speed limit has been activated, the system will actively limit the vehicle from not exceeding the target speed limit. When the actual speed exceeds the target speed limit value set by the driver, the system will gradually reduce the speed of the vehicle below the target speed limit.

3 When the manual speed limit has been activated, the driver can short press the speed limit function key (2) and return the system to a standby state. If you need to reactivate the manual speed limit, you can press the settings key (1). If you need to turn off the manual speed limit, short press the speed limit function button again (2).

Smart speed limit settings



When the Smart Speed Limit mode is selected, the intelligent speed limit function enters the standby state. The Speed Limit Assist indicator on the instrument cluster will illuminate in white. Press the Settings button (1), the intelligent speed limiting function can be activated and the speed limit assist indicator will illuminate in blue. When a vehicle passes by the first recognised speed limit sign speed limit marker; the speed indicator will convey the real-time speed limit value. If you encounter a speed limit sign with the same speed limit value; the speed limit value in the speed indicator will not be updated.

Note: Once a speed limit sign is identified, if no signs (same or different) are identified beyond a certain mileage, the original speed limit value on the instrument pack will be reset and displayed as '--'. The driver MUST observe these speed limits and adjust their speed accordingly.

Note: When the driver needs to change lane, make a turn or turn around at an a junction ans the driver uses an indicator in advance whilst slowing down, the original speed limit value on the instrument pack will be reset until a new speed limit sign is detected. If the conditions are not met, the original speed limit value will be maintained and will not be reset. The driver MUST observe the speed limits and adjust their speed accordingly.

The driver can temporarily exit the Speed Limit Assist by doing the following:

1 Depressing the accelerator pedal completely ;

2 Short press the speed limit function key (2). The Smart Speed Limit Assist function can be temporarily disabled. The instrument cluster speed limit assist indicator will turn white. To reactivate the Smart Speed Limit Assist, you can press the setting key (1). If you need to turn off Smart Speed Limit Assist, short press the speed limit function button again (2).

Smart Speed Limit Assist may not work in the following cases:

1 Front-facing camera detection performance is affected.

2 The vehicle is traveling at a high speed.

3 Speed limit signs are marked by roadside trees, austerity, snow cover, dust and other obstructions or the speed limit sign is not properly placed or is damaged.

4 There are multiple speed limit signs above or on the side of the road. Currently, the forward-looking camera can only recognise the speed limit sign in the lane.

5 A sign is located at the fork of the road, on the curve or displayed on slip roads

6 In scenarios such as lane changes.

7 The speed limits stored in the map database are outdated or incorrect, etc.

Note: Regularly update the map date to maintain the performance of the speed limit assistance system. For detailed upgrade process, please contact an MG Authorised Repairer.

IMPORTANT

- The camera may not correctly recognise speed limit signs during poor lighting conditions, bad weather, non-standardised or sheltered speed limit signs or the camera's own restrictions which include the recognition of similar signs (e.g., recognise a weight limit sign as a speed limit sign or recognise a minimum speed sign as the maximum speed sign).
- The camera cannot identify the text provided below the speed limit sign, such as Auxiliary Lane, 100 m Ahead, School Section, 7:00-10:00, etc. The camera will identify the speed limit sign with text as a normal speed limit sign.
- Some drastic and rapid steering operations made by the driver may be judged as changing lane or turning around in the intersection by the system, resulting in the identified speed limit signs being cleared.
- In cases where a speed limit sign contains multiple speed limits. The camera may not identify all the speed limits.

Blind Spot Safety Assistance (BSD, LCA)

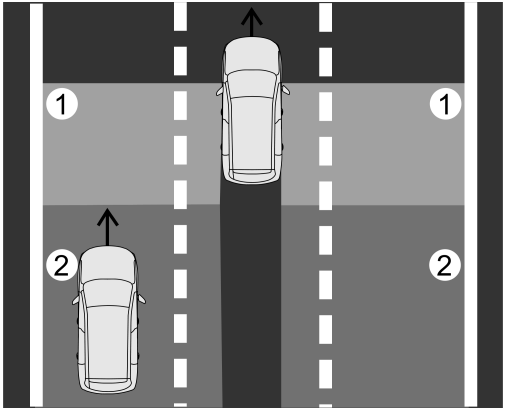

Feature introduction

Blind Spot Detection safety Assist can be turned on or off in the rear of the entertainment display to the driver assistance system settings screen.

Blind spot detection safety assistance includes blind spot monitoring and early warning function (BSD) and lane change assist warning function (LCA). The two active safety assistance functions are designed for the driver. An alarm is issued for vehicles positioned diagonally behind and on the side of the vehicle. Thus providing assistance in multi-lane traffic conditions.

The blind spot monitoring function (BSD) detects a vehicle positioned at the side (1) the vehicle will provide an alarm.

However, the Lane change assist system (LCA) on adjacent lanes (2) provides an alert for when a vehicle is approaching rapidly and there is a potential risk of a collision.

Blind spot assistance alarm

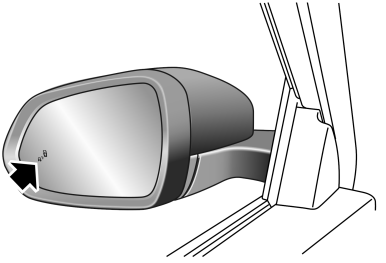

When driving at a speed greater than 9.3 mph (15km/h) and the system detects a vehicle in the blind spot of the vehicle's exterior mirror or detects an approaching vehicle behind the adjacent lane, the light on the corresponding side mirror will illuminate. If the turn signal on the same side is switched on, the light will begin to flash, prompting the driver to not change lanes, mitigating a collision.

Note: The warning lamps will not illuminate whilst you are overtaking another vehicle and your speed is greater than that of the vehicle you are passing, even though it is in the blind zone.

Backward Traffic Assist (RCTA, RCTB)

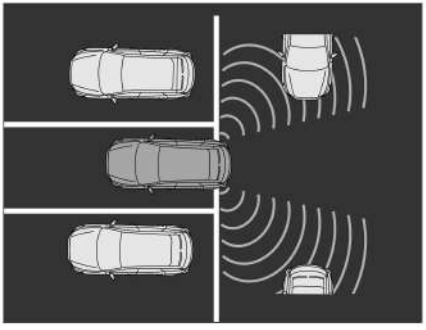

Feature introduction

This function includes a rear lateral hazard warning function (RCTA) and rear lateral hazard emergency braking (RCTB).

When reversing, the rear lateral hazard warning (RCTA) sensors are used to monitor vehicles approaching from the left and right rear of the vehicle and send an alarm when there is a risk of a collision.

The Rear lateral hazard emergency braking function (RCTB) works in conjunction with the Rear lateral danger warning function (RCTA). If the driver does not take avoidance measures, the system will apply emergency braking, avoiding the dangers of a collision.

Alarm mode

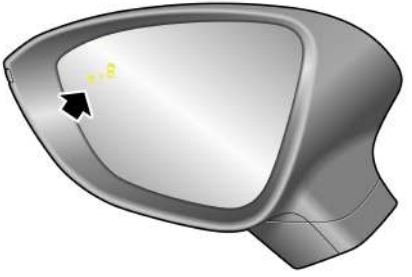

When there is a risk of a collision when reversing, the warning light on the corresponding side will be lit. The instrument pack and entertainment display screens will display warning messages. If the driver does not take avoidance measures, the system will carry out an emergency braking procedure.

Rearward Collision Warning (RCW)

Feature introduction

The Rear Collision warning can be turned on or off in the vehicle settings within the entertainment display.

When driving, if vehicles are approaching at an alarming speed towards the rear of the driven vehicle and if the system detects this as a risk, the rearward collision warning (RCW) system will emit an alarm and flash the rear hazard lights to alert the approaching driver.

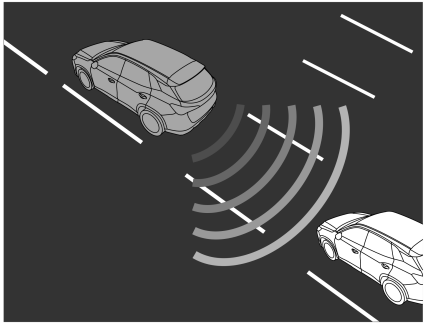

Alarm mode

When there is a risk of collision, The vehicle's hazard warning lights will flash, warning the vehicles behind.

Door Opening Warning (DOW)

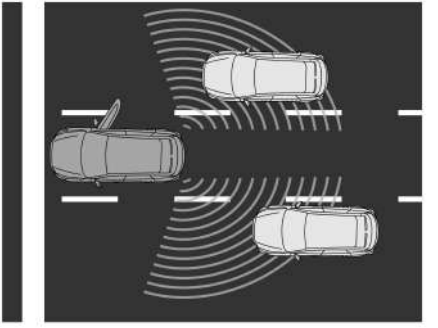

Feature introduction

The Door Opening Warning can be turned on or off via the vehicle settings in the entertainment display.

When the vehicle is stationary and the DOW sensors detect another vehicle, cyclist or pedestrian approaching the vehicle from the rear, the vehicle will emit an alarm to alert the driver of a potential risk when opening the door.

Door Opening Warning Alarm



The warning light on the corresponding side will illuminate, if you continue to open the door the warning light will flash, accompanied by an alarm.

Ultrasonic Sensor Parking Assist System

The purpose of the parking assist system is only to assist the driver during parking! The ultrasonic sensors may not be able to detect certain types of obstruction, e.g. narrow posts, small objects close to the ground, objects above the tailgate and some objects with nonreflective surfaces.

Keep the ultrasonic sensors free of dirt, ice and snow. If deposits build up on the surface of an ultrasonic sensor, its performance may be impaired. When washing the car, avoid aiming high pressure water jets directly at the ultrasonic sensors from close range.

Rear Parking Assist

Ultrasonic sensors located on the rear of the bumper monitor the rear of the vehicle. When an obstacle is detected, the system will then calculate the distance from the obstacle to the rear of the vehicle, alerting the driver with an audible alarm as the distance decreases.

Front Parking Assist*

Ultrasonic sensors are also located on the front bumper on some models and monitor the front of the vehicle. When an obstacle is detected, the system will then calculate the distance from the obstacle to the front of the vehicle, alerting the driver with an audible alarm as the distance decreases.

Parking assist system switch

The parking assist switch is a soft switch located within the entertainment display (can we get an explanation as to where the switch is).

When the vehicle is placed in Reverse, the parking assist system cannot be turned off.

Parking Assist working status

Rear Parking Assist

In order to operate the Rear Parking Assist system, simply, place the car in Reverse gear. To exit the Rear Parking Assist system, select Drive or place the vehicle in Park (P) gear. When in Reverse, the park

assist system will emit a short beep, informing the user the system is operational.

Note: If a longer, higher pitched sound is emitted for 3 seconds when the R gear is selected, this indicates a fault in the system. In this case contact an MG Authorised Repairer.

*Front and rear parking assist**

The front and rear parking assist systems can be activated in the following ways:

- Choose Reverse (R) gear;
- Press the soft key for the Rear Park assist;

The front and rear parking assist systems can be turned off in the following ways:

- Shift to P gear;
- The speed of the vehicle exceeds approximately 9.3 mph (15 km/h) ;
- Press the soft key to turn off the front and rear parking assist system.

When the Parking Assist function is turned on, When encountering obstacles, It will emit sounds of different frequencies(There may be blind spots) .

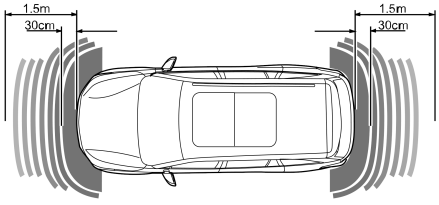

- If an obstacle is detected around 1.5 meters or 60 centimeters from the rear, an alarm will begin to sound. The closer the vehicle is to the obstacle, the frequency of the alarm will increase.
- If an obstacle is detected around 1.5 meters or 60 centimeters from the front, an alarm will begin to sound. The closer the vehicle is to the obstacle, the frequency of the alarm will increase.
- If an obstacle is detected at around 30 centimeters from the front or rear bumper the alarm sound will be continuous.

360 Around View

The purpose of the 360 around view system is to assist the driver when parking! The cameras have a limited field of view and cannot detect obstructions outside the field of view.

Although the infotainment display can provide images around the vehicle, please pay attention to the actual road conditions for your driving safety.

When the 360 surround view system is switched on, the entertainment display will show a 360 degree panoramic image of the vehicle. Please ensure you continue to observe the environment around the vehicle and do not solely rely on the 360 panoramic cameras. Pressing on the buttons around the vehicle will show you different angles around the vehicle.

The 360 Panoramic Image system can be accessed by:

- Placing the vehicle is Reverse
- Pressing the '360' switch
- In settings, switch on the low-speed turn signal auto turn function. When the vehicle is placed in Drive with the left/right turn indicator on, the system will automatically turn on.

Note: When the speed of the vehicle is greater than 9.3 mph (15 km/h), The panoramic image system will automatically exit.

When there is a malfunction or abnormality in the imaging system, The entertainment display may prompt the following information:

- Parking sensor malfunction, Please overhaul.
- Radar malfunction after parking, Please overhaul.
- Imaging system failure, Please overhaul.

Dynamic transparent chassis

The dynamic transparent chassis is used when the vehicle is maneuvering. A road surface image will be captured by the camera in advance. Once it has been processed, it will display a transparent effect on the entertainment display. Please ensure you are attentive to the surrounding environment and do not solely rely on the display. This can be set on or off in the interface.

Note: The dynamic transparent chassis does not recognise changes that may occur in the environment underneath the vehicle when it is stationary. Please drive carefully when using it, subject to the actual environment, so as not to cause damage to the vehicle.

Driver Monitoring System

The driver monitoring system is only an auxiliary driving tool. Under any circumstances, the driver MUST be responsible for the safety of the vehicle. Fatigue driving and distracted driving are strictly prohibited. The driver must always concentrate on driving carefully.

The driver monitoring system camera is located in front of the steering wheel.

Note: Do not block the camera area, otherwise the system will not be able to function correctly.

Note:

Please check and keep the camera clean and unobstructed to ensure correct functioning of the monitoring system;

DO NOT use abrasive or sharp objects to clean the camera;

DO NOT tap on the camera.

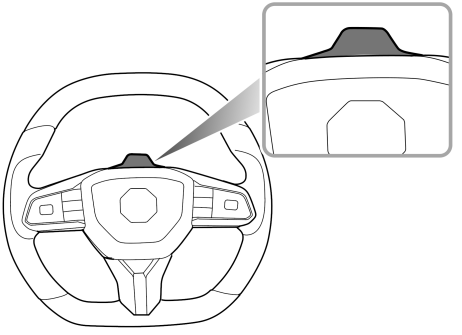

The driver monitoring system can detect driver fatigue through the interior camera, distractions etc. Depending on the fatigue identified and level of distraction an alert will be sent to the driver.

The driver monitoring system can be set up in the entertainment display.

MG Pilot Customisation

The MG Pilot switch is located in the entertainment display. This tab is where you will be able to save and quickly apply your personalised settings for the function in the 'intelligent drive' page.

- Long press to memorise your current settings;
- Short press to apply the saved personalised settings.

You can also pull down the middle of the status bar to quickly apply this function on the shortcut control page.

Note: To ensure driving safety, it is recommended to quickly apply the intelligent driving function when the vehicle is in Park (P gear).

Road Emergency Response

Hazard Warning Devices	*272*
Emergency Starting	*273*
*Emergency SOS call (eCall)**	*276*
Towing Hook and Transport	*278*
*Tyre Repair**	*282*

Hazard Warning Devices

Warning Triangle

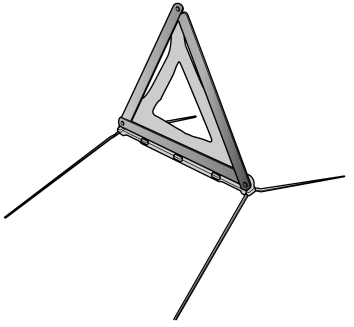

The warning triangle is placed under the loadspace carpet.

If you have to stop your car on the road in an emergency, you must place a warning triangle approximately 50 to 150 metres behind the car, if possible and press the hazard warning lamp button to warn other road users of your position.

Emergency Starting

NEVER attempt to power the vehicle by pushing or towing.

Make sure that both batteries are of the same rated voltage (12 volts) and that the booster cables are approved for use with 12 volt car batteries.

Ensure sparks and open flames are kept well away from the front compartment.

Ensure that booster cables are firmly connected and do not touch each other or other moving parts, otherwise, sparks may be caused, resulting in a fire or explosion.

In case of a low battery, the vehicle can be started by using a booster cable to connect the battery of another vehicle or by connecting the battery externally.

When jump starting, use the positive battery terminal as the positive jumping point when the tailgate can be opened. If the tailgate cannot be opened, open the front compartment fuse box and the terminal as shown can be used as the positive jumping point.

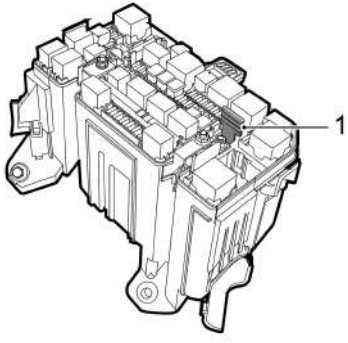

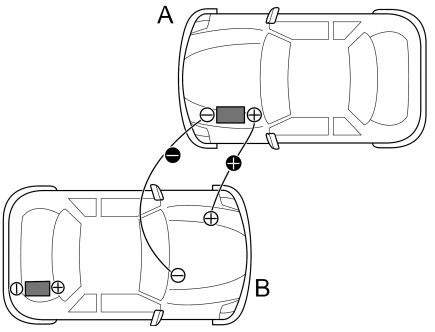

Turn off the Start switch and all electrical appliances of the vehicle and follow the instructions below:

1 Connect the red jumper cable from the positive (+) terminal of the power supply vehicle (A) to the positive (+) terminal of the low voltage vehicle (B). Connect the black booster cable from the negative (-) terminal of the donor battery (A) to a good earth point (an engine mounting or unpainted surface, for example) on the disabled vehicle (B) and try to keep it well away from the battery and bypass the fuel and brake lines.

2 Start the donor vehicle and allow it to idle for several minutes.

3 Start the disabled vehicle. If the disabled vehicle will not start after several attempts, it may need to be repaired. Please contact an MG Authorised Repairer for an overhaul.

4 After both vehicles are started normally, turn off the Start switch of the donor vehicle.

5 Disconnect the booster cables. Disconnecting the booster cables must be an exact reversal of the procedure used to connect them, i.e. disconnect the black negative cable from the earth point on the disabled vehicle FIRST.

IMPORTANT
Do Not open any electrical appliances of the vehicle with low power before dismantling the jumper cable.

Note: It is recommended to turn off the lights, air conditioning and other comfort appliances after starting the vehicle with power loss and keep the vehicle running for 1~2 hours to restore the battery power. If the battery is fully charged and the vehicle still cannot be started normally, please contact an MG Authorised Repairer for service.

Emergency SOS call (eCall)*

The eCall-SOS service is a public service of general interest and is accessible free of charge. The emergency call centre will establish verbal communication with the vehicle occupants in order to understand the extent of the emergency and the level of assistance required. If verbal communication is not achievable, an attempt will be made to send the following vehicle information message to the emergency call centre. The appropriate emergency services will be deployed to the vehicle's current location if known.

- Current time, location and direction of travel
- Vehicle fuel type
- Vehicle identification number (VIN)
- Whether the call was automatically or manually initiated
- Vehicle category
- Number of occupants

This system will ensure that your personal data is securely protected. It is designed to ensure that it is not traceable and other external systems are not able to gain access. When the eCall is triggered, the system will only transmit the data information to the relevant public safety answering points designated by the respective public authorities of the country on which territory they are located, which will receive and process your emergency call request. The system will retain data locally within 13 hours of being triggered.

You have the right to access the data information stored in this system and to request the rectification, erasure or blocking of data information that does not meet the requirements of the regulations. When you think your personal data is infringed, you have the right to complain to the competent data protection authority.

In an accident, your vehicle's eCall-SOS Emergency Assistance can either be triggered manually or in severe cases automatically upon detection by vehicle's sensors. Press the SOS button in the overhead console for 1 second to manually activate an emergency services call. A single beep will be heard when the eCall is triggered and a message will be displayed on the vehicle's instrument pack and

entertainment system. The entertainment system will be muted whilst the emergency services call is active. Manually triggered emergency services calls may be cancelled by pressing and releasing the SOS button again within 5 seconds of the initial press.



The emergency call (eCall) system will perform a self-test when the Start switch is in the 'ON/RUNNING' position. The LED status indicator on the SOS button will illuminate if no system faults are present. The LED status indicator will be extinguished or remain ON after flashing slowly if a fault is detected. A corresponding fault message will be displayed on the instrument pack.

Note: The eCall-SOS emergency call feature relies on cellular network coverage and the location of the vehicle may affect the proper use of the feature.

Towing Hook and Transport

Vehicle Towing



DO NOT tow the vehicle with all four wheels on the ground. Use only suspension towing or a trailer, otherwise, the transmission may be damaged. If pushing the vehicle is required in some cases, the speed MUST be less than 3 mph (5 km/h) and the duration must be less than 3 minutes.



The driver cannot operate the vehicle when pushing the vehicle or towing the vehicle with the towing hook. The driver's side seat belt should be inserted into the buckle and maintained in the inserted state, then turn the shift knob to N , otherwise the vehicle may be damaged.

Tow rope



DO NOT use a tow rope that is twisted as this may unscrew the towing hook.

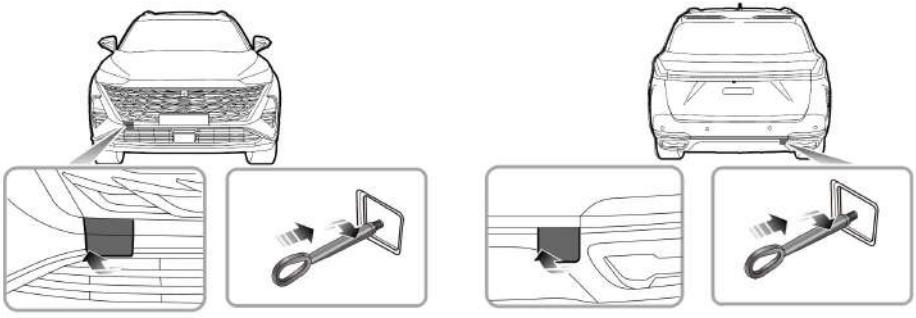

Your vehicle is equipped with 2 towing eyes (located at the front and the rear of the vehicle), which are used for fitting the towing hook in the tool kit. The tool kit issituated under the luggage carpet. To fit the towing hook, remove the small cover plate from the bumper. The front and rear small cover plates can be removed by pressing to tilt them up in the direction as shown in the figure. Then screw the towing hook via the small hole into the threaded hole in the bumper beam (as illustrated). Ensure the towing hook is fully tightened.

Note: The small cover removed may be secured to the bumper by a plastic cord.

The towing hooks can be used as the towing point in case of a breakdown or road traffic collision. They are not designed for towing other vehicles. The vehicle can be towed with a tow rope but a towing bar is recommended.

Towing

When towing, DO NOT accelerate or brake suddenly, this can cause accidents.

Suspension Towing

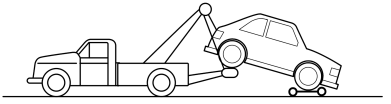

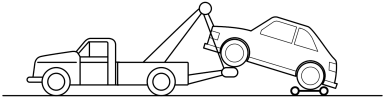

If the vehicle needs to be towed, the best towing method is to use suspension towing. When suspending, the driving wheels should be off the ground, otherwise it WILL damage the transmission. Release the parking brake, turn on the hazard warning lights and ensure passengers do not remain in the vehicle being towed.

Vehicle Transport

If your vehicle needs to be transported, a special transporter is recommended. Secure the vehicle on the transporter as follows:

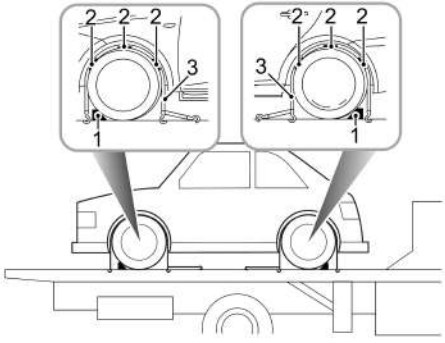

1 Apply the parking brake and engage the P gear.

2 Fit wheel chocks (1) as shown, then position the anti slip rubber blocks (2) around the circumference of the tyre.

3 Fit the lashing straps (3) around the wheels and secure to the trailer. Tighten the straps until the vehicle is securely held.

Tyre Repair*

Tyre Repair Tool

The tyre repair tool is located above the luggage compartment carpet.

Tool Identification

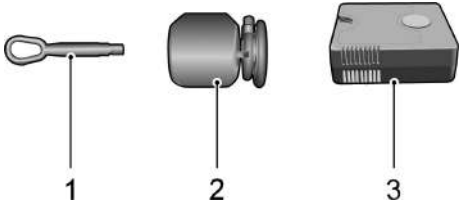

1 Towing hook

2 Repair fluid

3 Electric air pump

Tyre Repair

1 Remove the label at the bottom of the repair fluid reservoir and attach it to the steering wheel to remind the driver not to exceed 49.7 mph (80 km/h).

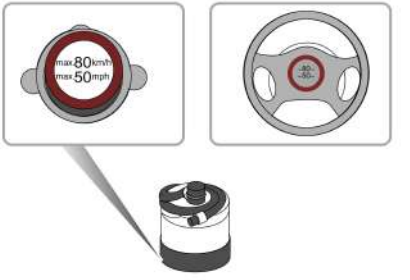

2 Connect the air hose of the electric air pump to the repair fluid reservoir. Invert the repair fluid reservoir into the slot of the electric air pump. Remove the valve dust cap of the damaged tyre and connect the hose connector of the repair fluid reservoir to the tyre valve. Ensure that the power switch of the electric air pump is switched off (i.e., with 'O' pressed down), then connect the

electric air pump plug to 12 V power socket and turn the vehicle power system on.



Note: To avoid battery overdischarge, please start the vehicle.

3 Switch on the power switch of the electric air pump (i.e., press '-'), to start pumping sealant into the tyre. The repair fluid reservoir will become empty after approximately 30 seconds. The tyre should reach the specified pressure within 5 or 10 minutes.

Note: When the electric air pump works, the pressure gauge may briefly reach 600 kPa (i.e. 6 bar) the pressure should then return to normal.

4 When the required pressure is reached, switch off the electric air pump (i.e., press 'o').

Note: If the required tyre pressure cannot be reached within 10 minutes, remove the tyre repair component and move the vehicle for a distance equivalent to one tyre revolution before checking the tyre; if the required pressure still cannot be reached, it indicates that the tyre is severely damaged and unrepairable. You should seek assistance from an MG Authorised Repairer.

Note: Consecutive operation of the electric air pump for more than 10 minutes may result in the motor overheating causing further damage.

Note: It is not advised that the electric air pump be switched on and off multiple times in a short time period.

5 Remove the repair fluid reservoir from the slot and disconnect the hose of the reservoir from the tyre valve. Then pull off the plug of the electric air pump from 12 V power socket.

6 Please drive the car within 1 minute upon the completion of the above operations to allow the sealant to distribute evenly in the tyre, while the vehicle speed MUST not exceed 49.7 mph (80 km/h) and the driving mileage not exceed 5 km. Then find a safe place to stop and recheck the tyre pressure.

If the tyre pressure has dropped to less than 80 kPa (0.8 bar), it indicates that the tyre is severely damaged and unrepairable, please contact an MG Authorised Repairer.

If the tyre pressure is between 80 kPa (0.8 bar) and the specified pressure, inflate the tyre with the electric air pump until it reaches the specified pressure. Repeat Step 6 .

If the tyre pressure is equal to the specified pressure, you may continue driving, but the vehicle speed must not exceed 49.7 mph (80 km/h) and the driving mileage shall not exceed 200 km.

Note: The tyre repair kit is only applicable to tyre damage caused by pins with a diameter no more than 6 mm and only the tread as shown in Figure A can be repaired, but not in the areas displayed in figure 'B'.

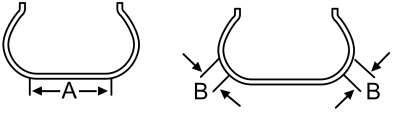

Maintenance

Maintenance Instructions	*287*
Bonnet	*291*
Engine Compartment	*293*
Engine Oil	*294*
Coolant	*299*
Catalytic Converter and Particulate Filter	*301*
High-voltage Battery Pack	*303*
Brakes and Brake Fluid	*305*
Fuse Replacement	*307*
12V Battery Maintenance and Replacement	*316*
Bulb Replacement	*318*
Washer	*319*

Wipers *322*
Tyres *325*
Cleaning and Car Care *331*

Maintenance Instructions

Regular Maintenance

The safety, reliability and performance of your vehicle will depend partly on how well it is maintained. You must ensure that maintenance is carried out when required and according to the information contained in the Warranty and Maintenance Handbook.

Servicing

For the next service information, please refer to the 'Instrument Pack' in 'Brief Introduction to Vehicle Functions' section or information related to the entertainment system. After the completion of each service, the next service display will be reset by your MG Authorised Repairer.

Note: If the maintenance is not carried out (or the display is not reset after maintenance), the maintenance display will not be able to provide the correct information.

Maintenance History

After each maintenance, always ask your MG Authorised Dealer to register the maintenance.

Fluid

Please use the fluid recommended and certified by MG MOTOR UK LTD. Refer to 'Recommended Fluids and Capacities' in the 'Technical Data' section.

IMPORTANT
Using fluids or additives inapplicable to this vehicle may damage the components or devices; please consult an MG Authorised Repairer for details.

Emission Control

Your car is fitted with exhaust emission and evaporative control equipment designed to meet specific territorial and legal requirements. Incorrect engine settings may adversely affect exhaust emissions, engine performance and fuel consumption, as well as cause high temperatures, which could

result in damage to the catalytic converters and engine.

IMPORTANT
You should be aware that unauthorised replacement, modification or tampering with this equipment by an owner or motor vehicle repairer could result in the manufacturer's warranty being deemed as invalid. In addition, no adjustment can be made to the engine settings. Otherwise, the vehicle emission indexes could be affected.

Owner Maintenance

Any significant or sudden drop in fluid levels or uneven tyre wear, should be reported without delay to an MG Authorised Repairer.

In addition to the maintenance referred to previously, some simple checks must be carried out more frequently.

Daily Check:

- Operation of lights, horn, wipers, washers and warning lights.
- Operation of seat belts and brakes.
- Look for fluid deposits underneath the car that might indicate a leak.
- Check tyre appearance.

Weekly Check:

- Engine oil level.
- Coolant level.
- Brake fluid level.
- Windscreen washer fluid level.
- Tyre pressure.
- Operate air conditioning.

Note: The engine oil level should be checked more frequently if the car is driven for prolonged periods at high speeds.

Special Operating Conditions

If your vehicle is frequently used in dusty conditions, or operated in extreme climates where sub-zero or very high ambient temperatures are normal, more frequent attention may need to be paid to maintenance requirements. You need to carry out special maintenance operations (refer to Warranty and Maintenance Handbook) or contact the MG Authorised Repairer.

Safety in the Garage



Cooling fans may commence operating after the engine has been switched off and continue operation for a number of minutes. Keep clear of all fans while working in the engine compartment.

If you need to carry out maintenance, observe the following safety precautions at all times:

- Keep your hands and clothing away from drive belts and pulleys.
- If the car has been driven recently, DO NOT TOUCH exhaust and cooling system components until the engine has cooled.
- DO NOT TOUCH electrical leads or components while the engine is running, or with the Start switch on.
- NEVER leave the engine running in an unventilated area - poisonous exhaust gases are extremely dangerous.
- DO NOT work underneath the vehicle with a jack as the means of support.
- Ensure that sparks and naked lights are far away from the engine compartment.
- Wear protective clothing and work gloves.
- Remove watches and jewelry before working in the engine compartment.
- DO NOT allow tools or metal parts of the vehicle to make contact with the battery leads or terminals.

Toxic Fluids

Fluids used in motor vehicles are poisonous and should not be consumed or brought into contact with

open wounds. These include: battery acid, coolant, brake fluid, fuel, engine oil and windscreen washer fluid.

For your own safety, ALWAYS read and obey all instructions on labels and containers.

Used Engine Oil

Prolonged contact with engine oil may cause serious skin disorders such as dermatitis and cancer of the skin. Wash thoroughly after contact. Used engine oil should be disposed of correctly. Incorrect disposal can cause a threat to the environment.

Bonnet

Opening the Bonnet

DO NOT drive when the bonnet is not closed or retained only by the safety catch.

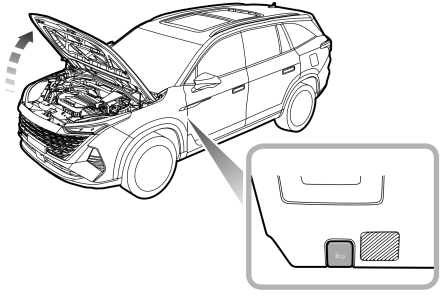

1 Pull the bonnet opening handle from inside the vehicle 2 consecutive times.

2 Raise the bonnet to open it.

Closing the Bonnet

Hold the bonnet with both hands and lower it down. When the bonnet drops for about the last 20 ~ 30 cm to the lock position, apply a downward force to fully close the bonnet.

By attempting to lift the front edge of the bonnet, check if the lock is fully engaged after closing the bonnet. If it is not fully engaged, you must repeat the operation.

Bonnet Open Alarm

If the bonnet is not fully engaged, when the vehicle is powered on, the corresponding alarm icon will be displayed in the message centre display. If it is found that the bonnet is not fully locked while driving, an audible warning will sound.

IMPORTANT

- For safety reasons, the bonnet should be closed well when driving. Therefore you must check after closing the bonnet that the bonnet is securely latched, e.g. the bonnet edge is flush with the body of the car.
- You should stop the car immediately when safety permits and close the bonnet if it is not closed fully when driving.
- Beware of injury to hands while fully closing the bonnet with a downward force.

Engine Compartment

While operating the components in the engine compartment, always observe the safety precautions listed under 'Safety in the garage'. Refer to 'Maintenance' within this section.

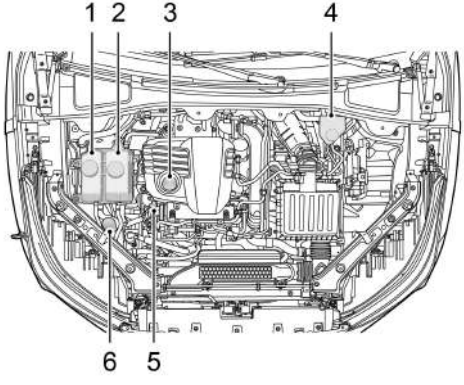

1 Drive motor Coolant Expansion Tank
2 Engine Coolant Expansion Tank
3 Oil Filler Cap
4 Brake Fluid Reservoir
5 Oil Dipstick
6 Washer Fluid Reservoir

Engine Oil

Engine Oil

The European Automobile Manufacturers Association (ACEA) and the American Petroleum Institute (API) classify the engine oils based on their performance and quality. To ensure the best performance of the vehicle, please use 0W-20 engine oil recommended by MG Motor that complies with ACEA C5 and API SP specifications. 0W-20 engine oil is suitable for low temperature and normal temperature environments, and is all-purpose engine oil for all seasons.

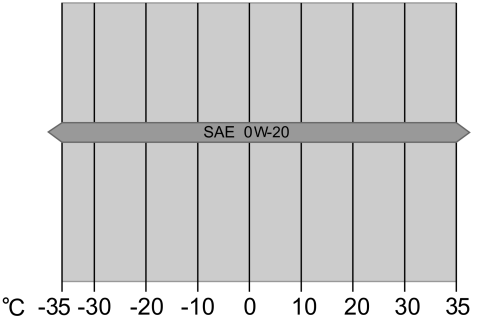

IMPORTANT
Do not let the engine run in a low coolant temperature environment for a long time. If you have driven for short distances multiple times and have not reached the normal engine operating temperature each time, there is a risk of engine oil emulsification. The instrument panel will pop up a reminder message 'Engine Temperature Low, Please Keep Running'. When there is a risk of oil emulsification in hybrid vehicles, once the engine is started, even if the battery is sufficient, the engine will be forced to not stop until the risk of oil emulsification is eliminated or the vehicle is powered off.

Due to the technical characteristics, the plug-in hybrid system more often runs at lower engine oil temperatures. Water vapour in the engine cannot completely evaporate at low oil temperatures and the oil is prone to emulsification. Minor oil emulsification will not affect normal engine operation.

Do not let the engine run in a low coolant temperature environment for a long time. If you have driven for short distances multiple times and have not reached the normal engine operating temperature each time, there is a risk of emulsification in the engine oil. It is recommended to extend the driving range and increase the vehicle speed to raise the temperature of the engine oil and coolant, in order to avoid severe emulsification of the engine oil.

Some vehicles are equipped with a water removal function. In the event of emulsification risk, even if the battery is sufficient, the engine will continue to run for water removal until the risk of oil emulsification is eliminated or the vehicle is powered off.

If you frequently run at low temperatures for a short period of time, your car will not be able to extend the engine running time and eliminate the risk of emulsification in a timely manner. If the risk continues to increase, some vehicles will display a reminder message on the instrument panel saying 'Engine water temperature is low, please keep running'. If the engine starts at this time, please

keep it running until the instrument panel reminder message pop-up automatically closes, at which point the risk of oil emulsification is eliminated.

Engine Oil Check and Refill

Driving the vehicle with the engine oil level ABOVE the upper mark or BELOW the lower mark on the dipstick, will damage the engine.

Do not spill engine oil onto a hot engine, otherwise it may cause a fire.

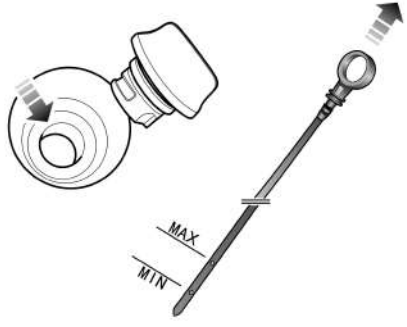

Check the oil level weekly and refill as necessary. Ideally, the oil level should be checked with the engine cold and the car resting on level ground. If the engine is running and already getting warm, power off the vehicle and wait for at least five minutes before checking the oil level.

1 Withdraw the dipstick and wipe off the oil on it.

2 Slowly insert the oil dipstick and pull it out again to check the oil level; the oil level MUST not be lower than the 'MIN' mark on the oil dipstick.

3 Unscrew the engine oil filler cap and refill the oil to maintain the oil level between the 'MAX' mark and 'MIN' mark on the oil dipstick.

4 Wait for 5 minutes and then recheck the oil level, add an appropriate amount of oil if necessary - DO NOT OVERFILL!

5 Finally, ensure the dipstick is inserted and oil filler cap is fully secured.

Engine Oil Specification

Use the engine oil recommended and certified by MG Motor. Refer to 'Recommended Fluids and Capacities' in the 'Technical Data' chapter.

Note: Using engine oil not applicable to this vehicle may damage the engine.

Coolant

Coolant Check and Top Up

Do not unscrew the coolant expansion tank cap when the cooling system is hot - escaping steam or hot coolant could cause serious injury.



It is recommended that the cooling system should be checked weekly when the cooling system is cold and with the vehicle resting on level ground. If the coolant level is below the 'MIN' mark, remove the coolant expansion reservoir cap and add coolant, but the level MUST not be higher than the 'MAX' mark.

Prevent coolant from coming into contact with the vehicle body when topping up. Coolant will damage paint.

If the coolant level falls appreciably during a short period of time, which raises suspicion of a leak, please seek an MG Authorised Repairer for service in time.

Coolant Specification

Coolant is poisonous and can be fatal if swallowed - keep the coolant reservoir sealed and out of the reach of children. If accidental contact of coolant by children is suspected, seek medical assistance immediately.

Prevent the coolant coming into contact with the skin or eyes. If this occurs, rinse immediately with plenty of water. If eyes are still red, painful or uncomfortable, seek medical attention immediately.

Please use the coolant recommended and certified by the manufacturer. Refer to 'Recommended Fluids and Capacities' in the 'Technical Data' chapter.

Note: Refilling of any additives inapplicable to this vehicle into coolant may damage the components to be protected. You are recommended to use the additives certified by the manufacturer, please consult your MG Authorised Repairer for details.

Catalytic Converter and Particulate Filter

Protection layer

The bottom of the car is coated with special durable protective materials, which can prevent damage from chemical and mechanical factors. However, since damage to the protective layer is unavoidable during use, it is recommended to regularly inspect the protection layer of the car's bottom and chassis, preferably once before and once after the cold season.

Do not allow vehicles to pass or park on roads or areas with combustible materials such as hay or leaves, to avoid exhaust systems coming into contact with combustible materials and causing fires.

Do not add a bottom protective layer on the catalytic converter or insulation board, as these substances may ignite during driving and cause a fire.

The exhaust system is equipped with catalytic converters and, in some models, particulate filters, which are capable of reducing the environmental impact of harmful gases emitted from the engine.

Catalytic converters and gasoline particulate filters are easily damaged through improper use, please observe the following precautions to minimise the chance of accidental damage.

Fuel

- Use ONLY fuel recommended for your car.
- Never allow the car to run out of fuel – this could cause engine misfire and serious damage to the catalytic converters and gasoline particulate filters.

Engine Oil

- Never allow the car to run out of fuel – this could cause engine misfire and serious damage to the catalytic converters and gasoline particulate filters.

Note: Please perform maintenance according to the maintenance plan in the 'Warranty and Maintenance Manual'.

Starting

Pay attention to the followings when starting the engine:

- Do not continue to operate the starter after a few failed attempts; seek an MG Authorised Repairer.
- Do not start the engine by depressing the accelerator pedal repeatedly after the failed attempt.
- Do not attempt to start the vehicle by pushing or towing.

Regeneration

The particulate filters equipped on the vehicle has a regeneration function. When the vehicle reaches certain running conditions (such as when the speed is greater than 50 mph (80 km/h)), the vehicle will automatically burn away the carbon particulate matter adsorbed in the particulate filters.

Driving

Pay attention to the following when driving the vehicle:

- Do not overload or excessively rev the engine.
- Do not stop the engine when the car is in motion with a gear selected.
- Seek an MG Authorised Repairer if you think your car's engine oil consumption is abnormal or the engine performance will be reduced.
- If abnormal jitter is suspected or the car lacks power while driving, seek an MG Authorised Repairer.
- Do not drive on terrain likely to subject the underside of the car to heavy impacts.

Note: No engine modification is allowed without permission. Modifying the engine may cause engine misfire, decreased engine power, or cause the engine to shake all of which can lead to serious damage to the catalytic converter.

High-voltage Battery Pack

Precautions and restricted conditions for use of battery

If the vehicle is parked for a long time, it MUST be charged at least once every 3 months (the battery power MUST remain above 50% on the instrument pack after charging).

It is strictly prohibited to park the vehicle for more than 7 days when the high-voltage battery pack is in a low state of charge (there is no effective mileage display on the instrument panel).

Failure to follow these guidelines will result in HV battery damage and invalidate the warranty.

Do not attempt to disassemble the high-voltage battery pack or any high-voltage components - these are dangerous. Any traces of disassembly or damage caused by attempted disassembly will void the warranty.

1 DO NOT park the vehicle in conditions where the ambient temperature exceeds 45℃ for more than 15 days. This will effect the performance and service life of the high voltage battery.

2 To better extend the service life of the high-voltage battery pack, it is recommended to charge the vehicle with slow charging. Fast charging is mainly used for emergency and long-distance driving.

3 It is recommended to charge the vehicle with slow charging every month, charging the battery to 100% and balancing the battery to extend the service life of the high-voltage battery pack.

4 When an accident causes damage to the high-voltage battery pack or any of its related components, or any repairs made to the high

voltage system, the vehicle must be inspected at an MG Authorised Repairer.

5 In the event of any accident or any body repairs being required, in order to avoid damage to the high-voltage battery pack, please contact an MG Authorised Repairer and conduct related operations after the high-voltage battery pack has been removed.

IMPORTANT
Only fully trained and qualified personel are allowed to work on the high voltage systems and components of this vehicle. Any disassembly of such systems or components is strictly prohibited.

Brakes and Brake Fluid

The brake pedal free play is 0 ~ 30 millimeters.

DO NOT rest your foot on the brake pedal while driving; this may overheat the brakes and reduce their efficiency, and cause excessive wear to the brake components.

Reasonable usage scope of the brake discs and pads is: Less than 2mm for the thickness of brake pads 28~30mm for front brake discs and 20~22mm for the rear brake discs.

For the first 1500km (932 miles), you should avoid situations where heavy braking is required.

Note that regular servicing is vital to ensure that all the brake components are examined for wear at the correct intervals and replaced when necessary to ensure long-term safety during the interval prescribed in Warranty and Maintenance Manual.

The vehicle needs to run in for 800km (497 miles) after the brake pad or disc is replaced.

Brake Fluid Check and Top Up

Brake fluid is highly toxic, keep the brake fluid sealed and stored out of reach of children. If accidental contact of brake fluid is suspected, seek medical attention immediately.

Prevent brake fluid coming into contact with the skin or eyes. If this occurs, rinse immediately with plenty of water. If eyes are still red, painful or uncomfortable, seek medical attention immediately.

The brake fluid level should be checked weekly when the system is cold and with the car on level ground. Clean the cover first before opening the brake fluid reservoir.

The brake fluid level can be seen through the reservoir and should be maintained between the 'MAX' and 'MIN' marks.

Note: Do not allow the brake fluid level to drop below the 'MIN' mark or rise above the 'MAX' mark.



Note: Brake fluid will damage painted surfaces. If you accidentally spill the brake fluid on the painted surface, soak up any spillage with an absorbent cloth immediately and wash the area with water or car shampoo.

Fuse Replacement

Fuse

Fuses are simple circuit breakers which protect the car's electrical equipment by preventing the electrical circuits from being overloaded. A blown fuse indicates that the circuit under its protection has failed and has stopped working.

If you suspect a fuse is faulty, you can take it out of the fuse box and inspect it to see if the wire in the fuse is blown.

IMPORTANT
• NEVER attempt to repair a blown fuse. ALWAYSreplace a fuse with one of the same rating, otherwisethe fire may be caused due to electrical systemdamage or circuit overload. • If a replaced fuse fails immediately, please contact alocal MG Authorised Repairer for service as soon aspossible.

It is recommended to have spare fuses in the vehicle, which can be obtained from an MG Authorised Repairer.

Fuse Box

The vehicle is equipped with 2 fuse boxes:

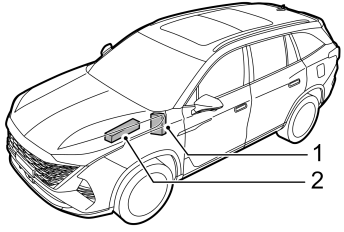

1 Passenger compartment fuse box (behind the driver side knee trim panel)

2 Front compartment fuse box (left of the front compartment)

Passenger Compartment Fuse Box

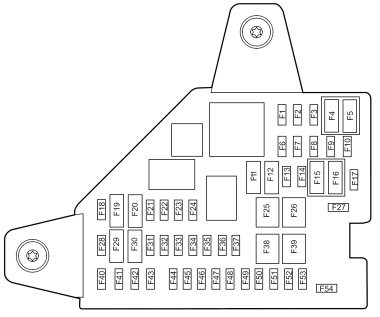

Check or Replace a Fuse

1 Turn off the Start switch and all electrical appliances and disconnect the negative battery cable.

2 Remove the driver side knee trim panel to access the fuse box.

3 Clamp the fuse head with a fuse extraction tool in the fuse box cover of the front compartment, pull and remove the fuse and check whether the fuse is blown.

4 If a fuse is blown, replace it with another fuse of the same type and same ampere value.

Fuse Specification

Code	Specs	Function
F1	5A	Alcolock
F2	5A	Body control module, instrument cluster control module, gateway
F3	5A	Sensing and diagnostic module
F4-F5	-	-
F6	7.5A	Mobile phone wireless charging module, rear USB port of center console, third row Left USB
F7	5A	Pedestrian warning loudspeaker
F8	10A	KLR Relay, seat back venting motor FL , seat back venting motor FR , seat cushion front motor FL , seat cushion front motor FR
F9	15A	Loadspace power socket
F10	15A	Instrument panel power socket
F11-F17	-	-
F18	5A	Rain/light/solar sensor, TPMS

Code	Specs	Function
F19	10A	Right front seat lumbar support module
F20	-	-
F21	10A	Air-Conditioning, Rear air conditioning control panel
F22	20A	Front Infotainment Control Module
F23	10A	Front view camera module
F24	7.5A	Entertainment control panel, central display screen
F25	30A	Right window regulator motor
F26	40A	Front blower
F27	-	-

Code	Specs	Function
F28	5A	Electronic parking brake switch, PRND gear display, vehicle driving mode control switch
F29	5A	Digital radio module, communication module
F30	30A	Sunroof
F31	5A	Air outlet controller, clock spring
F32	5A	Battery sensor
F33	10A	Sensing and diagnostic module
F34	5A	Instrument pack display
F35	30A	Left front seat lumbar support module
F36	15A	Trailer control module

Code	Specs	Function
F37	20A	Trailer control module
F38	30A	Scalable Chassis Domain Modulator
F39	30A	Left window regulator motor
F40-F43	-	-
F44	5A	Shifter control unit
F45	30A	Front passenger seat adjustment switch
F46	10A	Electronic Steering Column Lock
F47	10A	Data link connector (DLC)
F48	30A	Driver seat control module, front left seat adjustment switch
F49	5A	Around View Monitor control module

Code	Specs	Function
F50	10A	Driver side combination switch, master light switch
F51	10A	Gateway
F52	10A	Gateway
F53	30A	KLR Ralay
F54	10A	Exterior rearview mirror heating, heated rear window relay

Front Compartment Fuse Box

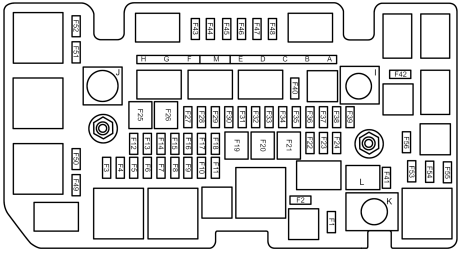

Check or Replace a Fuse

1 Turn off the Start switch and all electrical appliances and disconnect the negative battery cable.

2 Remove the front compartment trim cover and press the clip to open the upper cover of the front compartment fuse box.

3 Clamp the fuse head with a fuse extraction tool in the upper cover, pull and remove the fuse and check whether the fuse is blown.

4 If a fuse is blown, replace it with another fuse of the same type and same ampere value.

Fuse Specification

Code	Specs	Function
F1-F2	-	-
F3	30A	Body control module
F4	10A	KL15 Switching relay
F5	25A	Body control module
F6	-	-
F7	25A	Body control module
F8	25A	Power amplifier
F9	30A	Door handle release relay, door handle folding relay
F10	15A	Rear wiper motor relay
F11	15A	Front left signal lamp

Code	Specs	Function
F12	25A	Body control module
F13	10A	Power Electric Unit
F14	15A	Water Positive Temperature Coefficient Pump
F15	20A	Right headlamp
F16	5A	Power liftgate control module
F17	25A	Body control module
F18	25A	Body control module
F19	30A	Front Wiper
F20	60A	Engine Electrical Main Water Pump
F21	60A	Integrated Brake System
F22	5A	Battery Management System

Code	Specs	Function
F23	10A	Rearward driver assistance module
F24	20A	Left headlamp
F25	30A	Starter relay
F26	30A	Rear windscreen/rearview mirror heating
F27	20A	Demand Supply Fuel Pump
F28	10A	Combined Charging Unit
F29	25A	Electrical Auxiliary Pump
F30	10A	Powertrain Intergrated Control Unit
F31	10A	Electric Air Conditioning Compressor, HVPTC
F32	15A	Ignition relay
F33	15A	Right front signal lamp

Code	Specs	Function
F34	10A	Electrical Three Way Valve On WCAC, Electrical Compress Control Valve Chiller
F35	15A	Front windscreen washer relay, rear washer relay
F36	30A	Power Liftgate Control Module
F37	10A	Second Row Seat Easy Entry Motor RH
F38	15A	Horn relay
F39	5A	KL15 switching relay, Master light switch, interior rearview mirror
F40	5A	KL15 switching relay, Headlamp leveling
F41-F42	-	-

Code	Specs	Function
F43	15A	Ignition coil
F44	20A	Powertrain Intergrated Control Unit
F45	15A	Electric Heater PCV Pipe, Oxygen Sensor, Fuel Tank Isolation Valve
F46	10A	Ignition relay
F47	5A	Brake Switch
F48	20A	Powertrain Intergrated Control Unit
F49	-	-
F50	15A	Door handle fold relay, front door handle motor
F51	15A	Door handle fold relay, rear door handle motor

Code	Specs	Function
F52	15A	Door handle fold relay, front door handle motor
F53	5A	Powertrain Intergrated Control Unit
F54	5A	Parking distance sensor
F55	5A	Powertrain Intergrated Control Unit, Power Electric Unit, Integrated Brake System
F56	15A	Door handle fold relay, rear door handle motor
A	80A	Electric Power Steering
B-E	-	-
F	30A	Rear blower

Code	Specs	Function
K	100A	Cooling Fan
L	30A	Clutch Cooling Electric Oil Pump

12V Battery Maintenance and Replacement

Battery Maintenance



DO NOT use on-board electrical appliances for an extended period of time otherwise the battery may become flat, resulting in the vehicle being unable to start, affecting the battery life.



Always store batteries upright and never attempt to dismantle a battery.



Please pay attention to the following precautions:

- ***Stay away from flammable materials.***
- ***Wear goggles during maintenance.***
- ***Keep away from children.***
- ***The battery contains acidic liquids.***
- ***The battery is explosive.***
- ***Please read the Owner's Handbook carefully.***

The battery of this vehicle is located at the loadspace. The battery is designed to be maintenance free, so topping-up is unnecessary.

According to the current load condition and the status of the battery, the system may limit the power of some electrical appliances, please start the vehicle as soon as possible to charge the battery.

Note:

It is recommended that the vehicle be driven or idled for more than half an hour per week to help prolong the life of the battery.

When the vehicle will not be used for an extended period of time (More than a month), it is recommended that the battery negative terminal should be disconnected.

Make sure that the vehicle is powered off before connecting or disconnecting the negative battery cable.

Battery Replacement

The battery contains sulphuric acid, which is corrosive.

Please contact an MG Authorised Repairer to remove and install the battery. Only fit a replacement battery of the same type and specification as the original to maintain the correct vehicle functionality.



The battery must be disposed of using an approved method, as used batteries can be harmful to the environment. It shall be recycled by a professional company. Please consult an MG Authorised Repairer for more details.

Bulb Replacement

Bulb Specification

The light sources of this model are all LED lamps, which cannot be replaced individually. If the light source is damaged, please seek an MG Authorised Repairer.

Note: The fogging of the vehicle's headlamp and taillamp in low-temperature or high-humidity environments, or after heavy rain/washing, is a normal physical phenomenon and does not affect the functionality or lifespan of the lamp.

Note: When the vehicle is parked in a dry, well-ventilated environment, or when the external lamp are turned on and the vehicle is in motion, the fog will gradually evaporate, with only minor residues possibly remaining in the corners of the lamp.

Note: If you notice significant water accumulation or numerous water droplets inside the lamp, please seek an MG Authorised Repairer for service.

Washer

Washer Fluid Check and Top Up

DO NOT allow washer fluid to come into contact with naked flames or sources of ignition since washer fluid is flammable.

When filling the washer fluid, DO NOT let the washer fluid spill on parts around the engine or on the paint surface of vehicle body. In case the washer fluid is spilled on hands or other parts of the body, please immediately wash with clean water.

Check the washer fluid level regularly. When the level of washer fluid is low, please top up the washer fluid as instructed. Use the washer fluid recommended and certified by MG Motor. Refer to 'Recommended Fluids and Capacities' in the 'Technical Data' chapter.

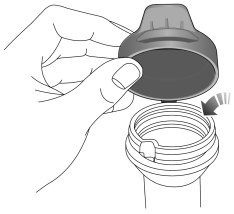

Note: DO NOT use an anti-freeze oracidic solutions such as vinegar in the fluid reservoir - anti-freeze will damage paintwork while acidic solutions will damage the washer motor.

IMPORTANT

- Use the washer fluid recommended and certified by the manufacturer. Misuse of washer fluid in winter may cause damage to the washer motor due to freezing.
- Using the washer switch when there is no washer fluid may cause damage to the washer motor.
- Operating the wipers when the windscreen is dry and there is no washer fluid may cause damage to the windscreen and wipers. Please spray the washer fluid and start the wipers when there is adequate washer fluid.

Washer Nozzles

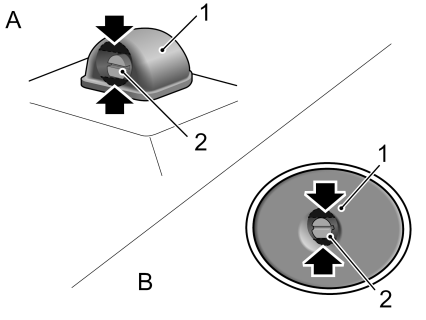

The angle of windscreen washer nozzles (A: front nozzle, B: rear nozzle) is configured during delivery, so generally there is no need for adjustments. To adjust the washer nozzle, you can insert a small flat-bladed screwdriver in the gap (the black area indicated by the arrow) between the housing (1) and the nozzle (2) and turn the nozzle downward or upward slightly to obtain an appropriate injection angle.

Operate the washer to spray water periodically to check if the washer nozzles are clean and in the correct direction. If the nozzle is obstructed, insert a needle or thin metal wire into the hole to remove the obstruction.

Wipers

Wiper Blades

IMPORTANT
• Grease, silicon and petroleum products impair the blade's wiping capability. Clean the wiper blades in warm soapy water and check their status periodically. • Clean the windscreen frequently. DO NOT use wiper blades to remove stubborn or ingrained dirt, it will reduce their effect and their life span. • If signs of hardness or cracking in the rubber are found or if the wipers leave streaks or unwiped areas on the windscreen, then the wiper blades should be replaced. • Clean the windscreen regularly with an approved glass cleaner and ensure the windscreen is thoroughly cleaned before the replacement of wiper blades. • Only fit the wiper blades that are identical to the original specification. • Clean ice and snow from the wipers and ensure they are not frozen or otherwise, sticking to the windscreen before attempting to operate them.

Front Windscreen Wiper Blade Replacement

The shape of the wiper arm may vary slightly depending on the configuration but the replacement method is the same.

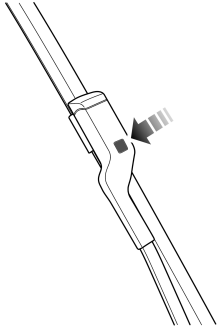

1 With the bonnet closed and the Start switch in the 'OFF' position for up to 20 seconds, press down the wiper stalk switch to Single Wipe position (see 'Wipers and Washers' in the 'Brief Introduction to Vehicle Functions' chapter) and release it. The wiper will automatically move to the service position and stop on the windscreen.

2 Lift the wiper arm away from the windscreen.

3 Press the button on the wiper arm (as illustrated), and pull the upper end of the wiper blade outward to disengage from the wiper arm.

4 Unhook the blade from the wiper arm and discard.

5 Locate the new wiper into the slot of the wiper arm.

6 Push the wiper blade towards the wiper arm until the wiper blade is fully embedded.

7 Put the wiper assembly back onto the windscreen and check whether the wiper blade is fixed correctly onto the wiper arm.

8 Press down the wiper stalk switch again to Single Wipe position and release, or turn on the Start switch, the wiper will exit the service mode and automatically return to its original position.

Rear Window Wiper Blade Replacement

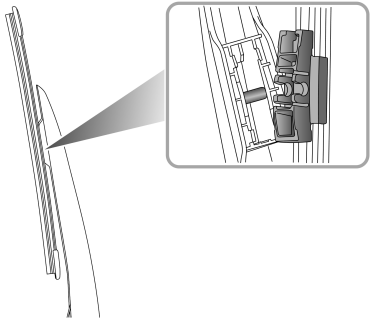

1 Lift the wiper arm away from the windscreen.

2 Pull the wiper blade connector outward with moderate force to separate it from the wiper arm and discard the wiper blade.

3 Put the fitting of the new wiper blade into the slot of the wiper arm. Ensure the wiper blade is properly secured on the wiper arm.

4 Place the wiper assembly back on the rear window.

Tyres

Overview

- New tyres may not have optimum adhesion properties, please run at moderate speed in an appropriately careful driving style for the first 500km (310.7 miles).
- Do not drive the vehicle into kerbs, if necessary, please drive a a slow speed and at a 90 degree angle.
- Regularly check tyres for damage (punctures, scratches, cracks and pits) - remove any foreign objects from the tread.
- The valve dust cap must be fitted to prevent dust from entering the valve.
- If the tyre is to be removed, always mark the tyre/wheel orientation to ensure correct reinstallation.
- Store the removed wheel or tyre in a cool, dry and dark place.

The damage of a tyre or rim may happen unnoticeably. If abnormal vibration or deviation is experienced, that means the tyre may have been damaged. If you suspect that the tyres are damaged, please be sure to immediately reduce the speed and stop to check the tyres for damage. If you can't see any damage from the outside, you must drive at a low speed to the nearest MG Authorised Repairer for inspection.

Tyres with Directional Tread Patterns

The profile of tyres with directional tread patterns is marked with an arrow, and you must use the tyres in this specified direction of rotation. Thus the optimized tyre rideability in preventing hydroplaning, improving adhesive ability, reducing running noise, extending wear life, etc. can be ensured.

Service Life of Tyres

Rational tyre pressure and moderate driving style can extend tyre life. Recommendations during use are as follows:

- Check the tyre pressures at least once a month, it should be carried out when the tyre is cold;
- Avoid cornering at excessive speeds;
- Regularly check tyres for abnormal wear patterns.
- When the vehicle is to be parked for a long time, please move it at least once every two weeks and check the tyre pressure to prevent deformation of the tyres due to long-term local stress.

The following factors affect the tyre life:

Tyre Pressure

Over or under-inflated tyres will cause the abnormal wear of the tyre, greatly shorten the service life and have an adverse effect on the driving characteristics of the vehicle.

Driving Style

Fast driving, excessively harsh acceleration and braking whilst cornering will aggravate the tyre wear.

Wheel Dynamic Balance

The wheels of a new vehicle are subject to dynamic balance testing, but out-of-balance wheels may still be caused due to the effects of various factors in operation.

If wheels are out of balance, shaking or vibration of the steering mechanism may occur and the tyres may start to wear excessively. It is important to restore wheel balance as quickly as possible. Each wheel should be rebalanced after fitting a new tyre or having a tyre repaired.

Wheel Alignment Defect

Incorrect wheel alignment can cause excessive tyre wear and affect vehicle safety. If the tyres show signs of abnormal wear, check the wheel alignment and seek advice from an MG Authorised Repairer.

Tyre Inspection

USE OF DEFECTIVE TYRES ARE DANGEROUS! DO NOT drive if any tyre is damaged, excessively worn or inflated to an incorrect pressure.

When replacing tyres it is strongly recommended that the new tyres are of the same specification as the original tyres. DO NOT replace the tyres with tyres of any other type. Alternative tyres, of a different specification, may adversely affect the vehicle's driving characteristics and safety. In order to maintain driving characteristics and safety , it is suggested that you consult an MG Authorised Repairer.

Always drive with consideration for the condition of the tyres and regularly inspect the tread and side walls for any sign of distortion (bulges), cuts or wear.

Note: Prevent tyres from coming into contact with oil, grease and fuel.

Tyre Pressure

Before a long distance journey, the tyre pressures must be checked.

Check the pressures at least every month, when the tyres are cold.

If it is necessary to check the tyres when they are warm, you should expect the pressures to have increased by 30 ~ 40 kPa (i.e. 0.3 ~ 0.4 bar). In this circumstance, NEVER let air out of the tyres in order to match the recommended pressures (cold) in the technical data.

Valves

Keep the valve caps firmly secured to prevent dirt from entering the valve. Check the valve for leaks (listen for a tell-tale hissing) when you check the tyre pressure.

Punctured Tyres

Your vehicle is fitted with tyres which may not leak if penetrated by a sharp object, provided the object remains in the tyre. If you are aware of this

occurring, reduce speed immediately and drive with caution until the spare wheel can be fitted, or repairs undertaken.

Note: If the sidewall of the tyre is damaged or distorted, replace the tyre immediately, do not attempt to repair it.

Tyre Wear Indicators

The tyres fitted as original equipment have 1.6 mm-high wear indicators at their tread pattern bottom, vertical with the wheel rolling direction and evenly distributed around the circumference. The mark on the tyre side such as capital letters TWI or triangular symbol shows the location of wear indicator.

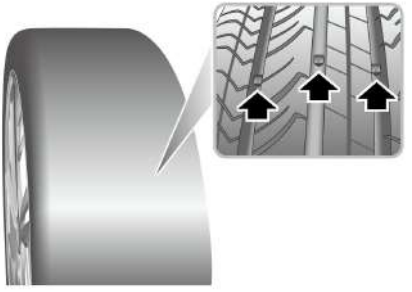

When the tread has worn down to 1.6 mm or below, the indicators will come to the surface of the tread pattern, producing the effect of a continuous band of rubber across the width of the tyre.

IMPORTANT
A tyre MUST be replaced as soon as a wear mark becomes visible. Otherwise there may be a risk of accidents.

Tyre Rotation

It is recommended that you swap wheels at irregular intervals in order to equalise tyre wear.

When the specifications of front and rear wheels of your vehicle are the same, if the tyres are worn seriously, it is recommended to swap the front and rear wheels as shown in illustration. This can prevent tyres from uneven wear, prolong the life span and balance tyre fatigue.

It is recommended to swap the driving wheels vertically and cross swap the non driving wheels.

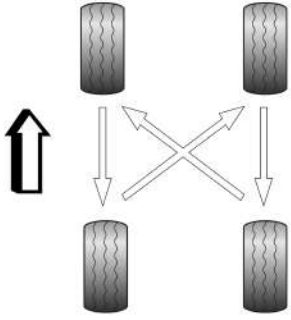

Note: Directional tyres (identified from the arrow on the tyre side) CANNOT be swapped from side to side.

Note: After the tyre rotation, it is required to carry out the TPMS self-learning. For details, please consult an MG Authorised Repairer.

Anti-skid Chain

Unsuitable anti-skid chains may damage the tyres, wheels, suspension, brakes or bodywork of your vehicle.

Please pay attention to the following requirements in the usage:

- The anti-skid chains should be fitted on the drive wheels (The vehicle of this model are equipped with front-wheel drive);
- The thickness of anti-skid chains must not exceed 15 mm;
- Please always observe the installation and tension instructions for the anti-skid chains, as well as the speed limitations of different roads;
- Do not drive faster than 31 mph (50km/h);
- To avoid the tyre damage and excessive wear of the anti-skid chains, the anti-skid chains must be removed while driving on the road without snow.

Size and Specifications of Wheels and Tyres Supporting Anti-skid Chains for This Vehicle	
Wheel Rim Size	7.5J×20
Tyre Size	245/50 R20 102W

Note: If you often drive on snow covered and icy roads, it is recommended to use winter tyres. Please consult an MG Authorised Repairer for details.

Cleaning and Car Care

Observe all safety precautions on cleaning products; Do NOT drink fluids and keep them away from the eyes.

Exterior Cleaning

Vehicle Cleaning

Your vehicle should only be cleaned with the vehicle power off, otherwise there is a risk of electrocution or accident.

When cleaning the vehicle in winter, moisture or ice in the braking system can reduce braking effectiveness and may increase the risk of an accident occuring.

Do not use high-pressure water to clean the front cabin, as it may damage the vehicle's electrical system.

Frequent washing and waxing can effectively protect the car from harmful environmental effects and some covered areas should be cleaned regularly, such as: door sills, seal areas, and covers. The interval for washing the car depends on various factors. For example:

- Usage frequency;
- Parking storage area;
- Seasons;
- Climate conditions;
- Environmental impact;

The longer insect residues, bird droppings, resin, road dust and industrial dust, asphalt, coal smoke particles, snow salts and other corrosive deposits adhere to car paint, the greater the risk of damage. Excessive temperatures caused by strong sunlight exposure, can also exacerbate erosion. Therefore, please clean the vehicle according to its actual condition.

After the winter salting period ends, you should thoroughly clean the underside of the car.

Note: It is recommended that the camera is protected whilst the vehicle is being washed to avoid damage to the surface of the vehicle and the camera from car wash equipment, brushes or or hard objects such as small stones that may be contained therein.

Automatic cleaning equipment

Car paint has a certain wear resistance, so generally, it is completely possible to use automatic cleaning equipment to wash the car. The structure of the cleaning equipment, the water filtration condition and the type of cleaning and maintenance agents can have an impact on the car paint, please choose the cleaning equipment suitable for your car.

Prior to entering the automatic car wash, you should close the windows and sunroof and also ask the cleaning equipment operator if it is necessary to remove the roof antenna, if your car has additional attachments such as spoilers, roof racks and radio antennas, you need to inform the cleaning equipment operator.

Manual cleaning

When manually cleaning your vehicle, please carefully choose cleaning agents according to your actual needs and rinse the vehicle with clean water after using detergents.

IMPORTANT
• Do not wash your vehicle in direct sunlight in hot weather. Wait for the exterior of the vehicle to cool down before cleaning. Otherwise, there is a risk of damaging the paint/ top coat finish. • When cleaning the vehicle in winter avoid spraying water directly onto door locks, panel gaps and sunroof seams due to risk of icing. • Do not use rough sponges or cloth to clean the car, this will damage the paintwork finish. • When cleaning the lamps do not use a dry cloth or sponge, use a soft microfibre cloth with a small amount of room temperature water/soapy water to clean the lamps.

Cleaning with high pressure washer

Before cleaning: Make yourself aware of the high-pressure washer equipment operation instructions and precautions. Please check and ensure the front and rear doors, front and rear

covers, charging port flap (if any), fuel flap (if any) and hidden door handles (if any) are closed.

Cleaning process: Always to control the jet pressure and keep the jet nozzle at a certain distance from the cleaning area, especially soft materials (such as rubber hoses, soundproofing materials, etc.). Avoid prolonged rinsing of the same area.

After cleaning: It is strongly that advised that you lightlyapply the brakes several times to remove moisture from the brake discs as it can affect braking performance and to avoid rusting of the brake discs. Completely clear residues from windows, rearview mirrors, etc., to avoid obstructing the view.

IMPORTANT

- The soft parts of the vehicle should be kept at a large enough distance from the nozzle of the high pressure cleaner.
- High-pressure rinsing may cause damage or peeling off of the stickers on the paint surface.

IMPORTANT

- DO NOT point the nozzle of the high-pressure cleaner directly into the door gaps, windows, sunroof, bonnet and tailgate, etc.
- DO NOT attempt to flush any open front and rear doors, bonnet and tailgate, small doors, etc.
- DO NOT spray or clean a window glass that is frozen or has been covered with snow.
- DO NOT spray directly onto connectors, seals, tyres, rubber hoses, heat insulation materials or other sensitive vehicle parts (such as small doors, small door locks, door locks, sensors, radars, cameras, etc.), and DO NOT hold a high pressure water jet in one position for a long time.
- DO NOT use a circle beam nozzle or rotary nozzle, especially for the tyres as this may cause damage.

Waxing

A high-quality layer of wax can effectively protect car paint from harmful environmental effects and can even provide protection against minor scratches. If you notice that water droplets no longer roll off clean paint smoothly, it is time to apply a new layer of high-quality hardwax protectant. Even when using automatic car wash equipment, use a wax protectant regularly and apply hard wax at least twice a year to protect the car paint.

Polishing the Paintwork

When the car's paint has lost its shine and waxing cannot restore it, only then is polishing needed.

If the used polish does not contain wax components, then the paint must be waxed after polishing, generally, a polish with the following characteristics is used to treat the paint surface:

- Very mild abrasives can remove surface stains without damaging the paint.
- Fillers can cover scratches.
- Waxing can provide a protective layer on the paint surface.

Note: DO NOT polish matte painted parts or plastic parts.

Paint damage

Small areas of paint damage, such as scratches or stone chips, should be painted immediately to prevent rust. If rust has already occurred, it must be completely removed, then a rust-proof primer should be applied to the area and finally, a topcoat should be applied.

Matte Paint

Matte paint is a special type of coating and special care should be taken in car washing and maintenance.

It is recommended to wash the car manually and do not use rough sponges or cloth. Do not use excessive force when cleaning and wiping. Avoid washing the car in direct sunlight.

- Do not use high pressure or steam to clean the vehicle, if the vehicle is very dirty, pre-cleaning is

required before washing, first clean off dust and other particles that may damage the paint surface.

- Use a large amount of clean water to spray the car body and use a soft sponge and neutral wax-free car wash liquid to clean the carbody from top to bottom, then dry it.

During daily care of your vehicle, attention should also be paid to:

- If the paint film comes into contact with resin or grease, as well as insect residues or bird droppings, etc., please remove immediately to avoid irreversible damage to the matte paint surface.
- If there is grease or fingerprints on the matte paint surface, immediately remove it with a clean cloth, do not use excessive force, to avoid causing irreversible damage to the matte paint surface.
- To maintain the matte finish of the paint, do not use abrasives, polishes and waxes cannot be used and the vehicle body should not be polished.
- Do not use any stickers, patches, magnets or similar items, to prevent damage to the paint surface.
- Any paint film repairs should be carried out by a qualified professional repair workshop.

Wiper Blades

Wash in warm soapy water. DO NOT use spirit or petrol based cleaners.

Windows and Mirrors

Regularly clean all windows, inside and out, using an approved glass cleaner.

Windscreen: Clean the outside of the windscreen with glass cleaner before fitting new wiper blades.

Rear windscreen: Clean the inside with a soft cloth, using a side to side motion to avoid damaging the heating elements. DO NOT scrape the glass or use abrasive cleaning compositions – this will damage the heating elements.

Rearview mirrors: Wash with soapy water. DO NOT use abrasive cleaning compositions or metal scraper.

Sunroof (if any): Regularly clean the guide rails on both sides and the front drainage trough of the sunroof, if it is a panoramic sunroof, also regularly

clean the front end of the rear glass (after the front glass is fully opened) to prevent the accumulation of dust, sand, leaves and other debris, so as not to block the drainage holes, causing poor drainage of the sunroof.

Plastic Parts

Plastic parts can be cleaned using a conventional cleaning method. When the stain is not easy to remove, you can use special curing agent for treatment , please do not use a paint curing agent for treatment of plastic parts.

Weather Strips

Rubber seals on doors, front and rear cowl covers, sunroofs and windows should be sprayed with a rubber conditioner (e.g. silicone spray) from time to time to maintain their flexibility and extend their service life.

Exterior Lamps

It is recommended to use a mild neutral cleaner to clean the surface of the lamps and avoid using detergents containing alcohols, polyols and strong polar organic solvent cleaners (such as foam cleaners, glass cleaners, thinners, de-icers, paint surface treatment agents, etc.), otherwise it may cause the lamp surface to crack, causing damage to the car lights. The car lights should be protected during vehicle washing or car cover operations.

Wheels



Ensure care is taken when cleaning the wheels to ensure cleaning materials or water does not come into contact with the brakes.

Cleaning the wheels can prevent brake dust and deicing salt from adhering to them. Stubborn brake dust can be removed with a non-acidic wheel cleaner.

Light Alloy Wheels

To maintain the appearance of light alloy wheels for a long time, regular maintenance is required, if snow-melting salt and brake dust are not regularly washed off, the light alloy wheels will start to corrode.

Always use a non-acidic special cleaner when cleaning. Do not use paint polish or other abrasive products when maintaining the wheels, if the paint protective layer is damaged (such as stone chip damage), the damaged area must be repaired immediately.

Bottom protection layer

The bottom of the car is coated with special durable protective materials, which can prevent damage from chemical and mechanical factors. However, since damage to the protective layer is unavoidable during use, it is recommended to regularly inspect the protection layer of the car's bottom and chassis, preferably once before and once after the winter season.

Interior Cleaning

When applying film to, or cleaning the interior of a vehicle, if water, alcohol, or other cleaning agents need to be sprayed, it is necessary to take protective measures (such as placing a cloth or absorbent sponge around the spraying area) and wipe away the liquid cleaner as soon as possible to prevent the liquid from flowing into the vehicle's electrical appliances and causing damage to the vehicle.

Condensers, radiators and cooling fans

During the daily driving process of the vehicle, the condenser, radiator and cooling fan may accumulate some dirt on the or the fan blades, thereby affecting the correct operation of the A/C system, cooling system or vehicle noise. Please pay attention during routine maintenance and cleaning, if there is a build up of dirt, rinse with clean water or wipe with a cloth. Be careful during the cleaning process, to avoid damaging the fins or blades of the condenser, radiator, fan and other components.

Air Conditioning Cleaning

During the daily use of air conditioning, some dirt may accumulate inside the air conditioning system, affecting the normal operation of the air conditioning system, therefore, it is necessary to clean the Air conditioning system.therefore, it is necessary to clean the interior of the A/C regularly. It is recommended to visit an MG Authorised Service Center for professional handling.

Note: It is recommended to use a small amount of cleaning agent in the form of a spray when cleaning the air conditioning to avoid vehicle failure caused by liquid flowing into on-board electrical appliances.

Plastic parts, artificial leather and fabrics

Plastic parts and artificial leather should be cleaned with a damp cloth. If stains cannot be removed, only use a special solvent-free plastic cleaner and conditioner to clean these parts.

Soft pads and fabric finishes on doors, loadspace lid panels, roof, etc., should be cleaned with a special cleaner or dry foam and a soft sponge.

Note: DO NOT polish dashboard components – these should remain non-reflective.

Airbag Covers



DO NOT allow these areas to be flooded with liquid and DO NOT use petrol, detergent, furniture cream or polishes.

To prevent airbag damage, only use a damp cloth and upholstery cleaner to carefully clean the following areas:

- Steering wheel centre panel.
- Dashboard area of the passenger airbag.
- Roof lining with head side airbags.

Seat Belts



DO NOT use bleaches, dyes or cleaning solvents on seat belts.

Fully extend the seat belt, then clean with warm water and neutral soap. Allow the seat belt to air dry naturally. Do not stretch or use the seat belt until it is completely dry.

Carpets and fabrics

Before cleaning with a diluted upholstery cleaner, test it in an inconspicuous area first. Check if the cleaning agent does not damage the carpet and fabric.

Leathers

Due to the characteristics of the leather used on the vehicle (sensitivity to oil, grease and dirt) you should take extra care in cleaning and caring for any leather surfaces. Always read the label and instructions of any leather cleaner you purchase carefully.

- Dark (especially damp) and easy-to-fade textile fabrics may transfer their colour onto leather seats;
- Dust and dirt particles entering leather pores, creases and seams can prematurely wear or damage the leather surface.

It is recommended that you carry out regular and suitable maintenance on any leather. For deep care, it is recommended to visit an MG Authorised repairer.

Recommended cleaning method

1 Use a white clean cloth to dip in clean water and wring it out, gently wipe the leather surface to remove dust, repeat two or three times, open the window for ventilation and let it dry naturally. Avoid high temperature exposure or using a hair dryer to dry.

2 If there is dirt that cannot be removed with clean water, please use a leather-specific cleaner that does not contain solvents or a neutral soap solution to wipe.

Note: Solvents mainly include: various alcohols, strong acids and bases, amides, oleic acids, gasoline and other solvent-containing substances.

IMPORTANT
• Always clean at room temperature, temperature should not exceed 45 ℃. • DO NOT use solvent-based cleaners: solvent-based cleaners (including ethanol) will cause colour loss/surface coating damage. • It is recommended to clean your leather immediately after contamination, some stains will be very difficult to remove if left for a long time. • It is recommended to use an all-polyurethane sponge for cleaning materials, and DO NOT use magic or wet wipes. It is recommended to choose non-woven fabrics with good water absorption and ethanol-free wipes for cleaning cloths.

Recommended maintenance advice

- Use special leather cleaner after each clean. Specialist leather treatment can nourish the leather, making it flexible, breathable and restore moisture, whilst creating a protective layer on its surface.
- Clean the leather every two to three months to effectively remove stains.
- Remove ink marks, shoe polish stains, etc., as soon as possible.

Note: Solvents mainly include: various alcohols, strong acids and bases, amides, oleic acids, gasoline and other solvent-containing substances.

Combination Instruments, Entertainment Displays

Clean only with a soft, dry cloth.

Technical Data

Technical Data Dimensions	343
Complete Vehicle Mass Parameters	345
Towing Parameters	346
Main Engine Parameters	348
Main parameters of hybrid motor	349
Parameters of High Voltage Battery Pack	350
Dynamic Performance Parameters	352
Recommended Fluids and Capacities	353
Wheel Alignment (unladen)	354
Wheels and Tyres	355

Recommended Tyre Pressures (Cold) *356*

Technical Data Dimensions



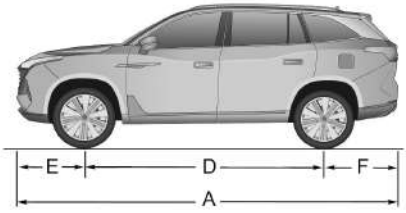

Item, units	Parameter
Overall length A, mm	4983
Overall width B, mm	1967
Overall height C (unladen), mm	1778/1771
Wheelbase D, mm	2915
Front overhang E, mm	977
Rear overhang F, mm	1091

Item, units	Parameter
Front wheel track, mm	1674
Rear wheel track, mm	1674
Minimum ground clearance (laden),mm	11.5
Minimum turning circle diameter, m	153
Fuel tank capacity, L	65

Note: Vehicle length not including the license plate.

Note: Rearview mirrors and the deformed portion of tyre wall directly above the touchdown point are not included in the total width.

Complete Vehicle Mass Parameters

Item, units	Parameter
Number of persons in cab, person	7
Unladen vehicle weight (kerb), kg	2160
Unladen front axle weight, kg	1164
Unladen rear axle weight, kg	996
Gross vehicle weight, kg	2717/2735
Laden front axle weight, kg	1278
Laden rear axle weight, kg	1439/1457

Towing Parameters

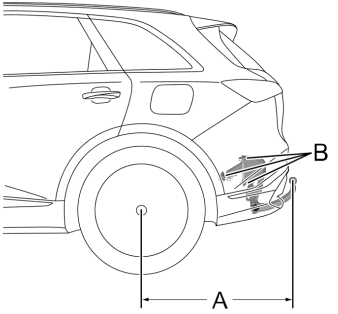

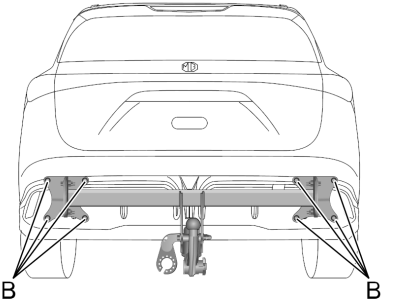

Item, Parameter	Parameter Values
Maximum towing mass (without brakes), kg	750
Maximum towing mass (with brakes), kg	2000
Maximum net load at the coupling point, kg	100

Item, Parameter	Parameter Values
Distance from wheel centre to tow hook centre point (A), mm	1176
Towing device mounting point	B

Note: When towing a trailer, the vehicle speed MUST not exceed 62 mph (100 km/h).

Note: Prior to towing a trailer, please check the rear tyre pressures, inflate to at least 20 kPa (0.2 bar) above the recommended pressure - DO NOT allow the tyre pressure to exceed 300 kPa (3.0 bar), this can be dangerous.

Main Engine Parameters

project	Parameter value
Bore×Stroke, mm×mm	88.1×73.5
Total displacement, L	1.496
Compression ratio	13.5
Maximum power, kw	105
Engine speed at maximum power, rev/min	5500
Maximum torque, Nm	230
Engine speed at maximum torque, rev/min	4000
Fuel grade, RON	95 and above unleaded gasoline

Main parameters of hybrid motor

Item	Drive Motor
Rated power (Kw) / RPM (r/min) / Torque (Nm)	80/5457/140
Peak power (Kw) / RPM (r/min) / Torque(Nm)	176/16000/390

Parameters of High Voltage Battery Pack

Battery pack type

Parameters	Value	
Battery type (model)	**BR065A21S1**	
Rated Capacity (Ah)	65@1C@25℃	
Capacity fade (%)	10@1100cycle@25℃	
Power (W)	SOC	BOL discharge power(W)@10s@25℃
	80%SOC	137280
	20%SOC	75920
Power fade (%)	10@1100cycle@25℃	
Internal resistance (Ω)	SOC	BOL discharge DCR(Ω)@4C@10s@25℃
	50%	0.155
Internal resistance increase (%)	15@1100cycle@25℃	

Energy round trip effciency (%)	95@25℃
Energy round trip effciency fade (%)	3.5@1100cycle@25℃
Expected life-time (cycles)	3500@70%SOHe@25℃
Expected life-time (calendar years)	16@70%SOHe@25℃

Note: If you require any information regarding battery state of health or the expected life cycle of a battery, please contact an MG Authorised Repairer for support.

Dynamic Performance Parameters

Item, units	Parameter
Maximum speed, km/h	200
Gradeability, %	35

Note: The dynamic performance parameters are test data under specific conditions.

Note: Gradeability is affected by different road surfaces, tyre pressures, tyre tread depth, vehicle load and vehicle battery level.

Recommended Fluids and Capacities

Name	Grade	Capacity
Engine oil, L	C5&SP 0W-20	4
Engine coolant, L	Glycol (OAT) type	10
Drive motor control unit coolant, L		7
Transmission fluid, L	Castrol BOT794	4.35
Brake fluid, L	DOT 4	1
Washer fluid, L	Room temperature/low-temperature detergent	3
Air conditioning refrigerant	R-134a*	1170±20g
	HFC-1234yf* contains fluorinated greenhouse gases	1.17±0.02kg GWP 0.501 CO_2 eq 0.0006t

Wheel Alignment (unladen)

Item, units		Parameters
Front Wheel	Camber angle	-20′±45′
	Castor angle	5°40′±45′
	Toe-in angle (total toe-in)	6′±15′
	King pin inclination	13°25′±45′
Rear Wheel	Camber angle	-45′±45′
	Toe-in angle (total toe-in)	12′±15′

Wheels and Tyres

Wheel Rim Size	7.5J×20	7.5J×20
Tyre Size	245/50 R20 102W	255/45 RF20 101V

Recommended Tyre Pressures (Cold)

Wheel	All Operating Conditions
Front Wheel	240 kPa/ 2.4 bar/ 35 psi
Rear Wheel	240 kPa/ 2.4 bar/ 35 psi