MG3/MG3 Hybrid+

Version 1.0

March 21 , 2024

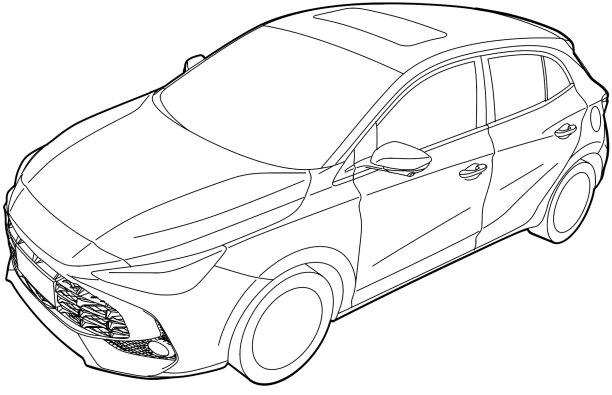

CONTENTS

MG3/MG3 Hybrid+ 1

1 Instructions Before Using the Vehicle 17

Introduction 18

The Owner's Handbook 18

Status at Time of Printing 18

Warranty and Service 18

Symbols Used 19

In an Emergency 20

Vehicle Identification Information 21

Vehicle Identification Markings (Gasoline) 21

Vehicle Identification Markings (HEV) 21

Vehicle Identification Plate 22

Instructions for Use of Hybrid Vehicle* 23

Effects of Ambient Temperature 23

Instructions for High Voltage Battery Pack Recycling 23

Precautions in the Event of an Accident 24

High Voltage System 25

Crash Outage Control 27

2 Brief Introduction to Vehicle Functions 29

Instrument Pack 30

Instrument Information Display Operation 32

Message Centre 32

Warning Message 33

Warning Lights and Indicators 34

Lights and Switches 47

Master Lighting 47

Main Beam Switch 50

Direction Indicator Switch 53

Fog Lamps 54

Hazard Warning Lamps 54

Wipers and Washers 55

Windscreen Wiper and Washer Operation 55

Wash and Wipe 56

Rear Window Wiper and Washer Operation* 57

Horn 59

Rearview Mirrors 60

CONTENTS

Exterior Rearview Mirrors 60
Interior Rearview Mirror 62
Windows 63
Power Operated Window Switch 63
Window Operation 64
Sunroof* 66
Instructions for Use 66
Sunroof Operation 67
Sunvisor 69
Interior lighting 70
AUTO ON Function 70
Rear Courtesy Lights* 71
Power Socket 72
Front Console Power Socket 72
Rear Console Power Socket 73
Power Socket of Interior Rearview Mirrors 74
Storage Devices 75
Instructions for Use 75
Glove Box 75

Storage Box 76
Glasses Box* 76
Cup Holder 78
Centre Console Cup Holder 78
3 Preparations for Driving 81
Load Carrying 82
Loadspace Loading 82
Towing* 83
Keys 85
Overview 85
Replacing the Smart Key Battery 86
Immobiliser System 90
Power System Immobiliser 90
Body Anti-theft System 90
Tailgate 94
Fuel System 96
Fuel Requirements 96
Fuel Filler 97

CONTENTS

Refueling 97
Steering System Adjustment 99
Steering Wheel Position Adjustment 99
Electric Power Steering 99
Electric Power Steering Module Angle Initialisation 100
Steering Wheel Heating* 100
Alcohol Interlocks 101
4 Driving the Vehicle 103
Power System Start/Stop 104
Starting the Power System (Key Start)* 104
Starting the Power System (Keyless Start)* 105
Start the power system 106
Stopping the Power System 108
Economical and Environmental Driving 110
Running-in 110
Environmental Protection 110
Economical Driving and Maintenance 110
Driving in Special Environment 112

Gear Shift-Electric Drive Transmission* **113**
Gear Shift Control 113
Protection Mode 114
Gear Shift-Continuously Variable Automatic Transmission (CVT)* **116**
Instructions for Use 116
Gear Shift 116
Protection Mode 120
Gear Shift-Manual Transmission* **122**
Drive Mode* **124**
Service Brake **125**
Vacuum Assisted Hydraulic Brake System* 125
Integrated Braking System (IBS)* 126
Modes of Power* **127**
Energy Regeneration* **128**
5 Safety **129**
Seat Belt **130**
Protection Provided by Seat Belts 130
Wearing Seat Belts 132

CONTENTS

Children and Seat Belts 135
Seat Belt Pre-tensioners 137
Seat Belt Checks, Maintenance and Replacement 138
Airbag Supplementary Restraint System 141
Overview 141
Airbag Deployment 142
Conditions in Which Airbags Will Not Deploy 147
Service and Replacement of Airbags 151
Child Restraints 153
Important Safety Instructions about Using Child Restraints 153
Fixing Child Restraints 157
Child Restraint Groups and Installation Position 160
Child Proof Locks 164
Body Stability Control System 165
Reinstating the body stability control system 165
Anti-lock Brake System (ABS) 166
Parking Brake 167
Parking Brake System - Electronic Parking Brake (EPB)* 167
Parking Brake System - Manual Parking Brake* 169

Auxiliary Brake system **170**
Auto Hold* **171**
Hill Hold Control (HHC) **174**
Active Rollover Protection (ARP) **176**
Emergency Braking Hazard Warning Lights Control (HAZ)* **177**
Pedestrian Alert Control System* **178**
Tyre Pressure Monitoring System (TPMS)* **179**

6 Comfort Systems **181**

Seat Adjustment **182**
Front Seats 182
Rear Seats 183
Head Restraint Operation 183
Ventilation System **185**
A/C Filter Element 186
Vents 186
A/C Control Pane **188**
Control Panel 188
Shortcut Key of A/C On/Off 188

Defrost/Demist Button 188
Heated Rear Window Button 188
Control Panel B* 189
A/C control Interface 190
Air Conditioning Control Interface - Connected Car * 190
System On/Off 190
A/C On/Off 190
Air Distribution Mode 190
Air Recirculation Mode 191
Temperature Control 191
Blower Speed Control 191
Steering Wheel Entertainment Control Buttons 192
Intelligent Display interface 193
Basic Operations 193
Main System Interface 193
Vehicle-Mobile Phone Connection 195
Navigation 196
7 Intelligent Driver Assistance 207

Instructions for Intelligent Driver Assistance 208
Disclaimers for Intelligent Driver Assistance Function 208
Cameras and Radars 210
Driver Assistance Camera 210
Driver Assistance Radar 212
Constant Speed Cruise Control* 214
Adaptive Cruise Control (ACC)* 217
Adaptive Cruise Activation 217
Adaptive Cruise Target Following Distance Adjustment 219
Adaptive Cruise Control Target Speed Adjustment 219
Adaptive Cruise Control Pause 220
Automatic Deactivation of Adaptive Cruise Control 220
Adaptive Cruise Override 221
Adaptive Cruise Resume 221
Clearing Target Speed Memory 221
Special Driving Environments 222
Intelligent Cruise Assist (ICA)* 226
Intelligent Overspeed Warning* 229
Speed Limit Assistance System* 231

Speed Limit Assistance System 231
Lane Departure Assist 235
Front Collision Assist (FCA) 238
Ultrasonic Sensor Parking Aid 241
Parking Camera* 243
360 Around View Monitor System* 244
Indirect Driver Fatigue Monitoring System 245
8 Emergency Information 247
Hazard Warning Devices 248
Warning Triangle 248
Emergency Starting 249
Emergency Call 252
Vehicle Recovery 254
Towing Vehicle 254
Towing Vehicle 257
Tyre Repair and Tyre Replace 258
Tyre repair tool* 258

Tyre Repair* 258
Spare Wheel and Tools* 260
Spare Wheel Replacement Tool* 261
Wheel Replacement* 262

9 Maintenance 267

Maintenance Instructions 268
Regular Maintenance 268
High Voltage Battery Pack* 272
Precautions and restricted conditions for use of battery 272
Bonnet 274
Opening the Bonnet 274
Closing the Bonnet 274
Bonnet Open Alarm 274
Engine Compartment 276
Engine Oil 278
Engine Oil 278
Engine Oil Check and Refill 279
Engine Oil Specification 280

CONTENTS

Catalytic Converter **281**
Cooling System **283**
Coolant Check and Top Up 283
Coolant Specification 284
Brake **285**
Brake Fluid Check and Top Up 285
Brake Fluid Specification 286
Fuse Replacement **288**
Fuse 288
Passenger Compartment Fuse Box 289
Front Compartment Fuse Box 291
12V Battery **295**
Battery Maintenance 295
Battery Replacement 296
Bulb Replacement **298**
Bulb Specification 298
Bulb Replacement 298
Washer **308**

Washer Fluid Check and Top Up 308
Washer Nozzles 309
Wipers 310
Wiper Blades 310
Windscreen Wiper Blade Replacement 311
Rear Window Wiper Blade Replacement 312
Tyre 313
Overview 313
Caring for Your Tyres 315
Tyre Wear Indicators 316
Wheel Fitment Rotation 317
Tyre/Snow Chains 318
Cleaning and Caring 319
Exterior 319
Cleaning the Interior 323
10 Technical Data 325
Technical Data Dimensions 326
Vehicle Weights 328

CONTENTS

Towing Weights **329**
Towing parameters 329
Major Parameters of Engine **331**
Dynamic Performance Parameters **332**
Parameters of Drive Motor **333**
Recommended Fluids and Capacities **334**
Wheel Alignment (Unladen Condition) **335**
Wheels and Tyres **336**
Tyre Pressures (Cold) **337**

Instructions Before Using the Vehicle

Introduction 18

Vehicle Identification Information 21

*Instructions for Use of Hybrid Vehicle** 23

Introduction

The Owner's Handbook

This Handbook describes all of the vehicles and standard equipment specification within the model range. Some information may be inapplicable to your individual model.

If you have any questions about the operation and parameters of the vehicle, please contact an MG Authorised Repairer will be glad to advise you.

The illustrations in the Owner's Handbook are for reference only.

The information contained in this Handbook may vary slightly depending on the vehicle configuration, software version and sales regions.

Status at Time of Printing

Potential occurrence of damage to the auditory system if exposed to sound waves with a power greater than 85 (eighty-five) decibels.

MG operates a policy of constant product improvement and therefore reserves the right to change specifications without notice at any time.

Whilst every effort is made to ensure complete accuracy of the information in this publication, no liabilities for inaccuracies or the consequences thereof, including loss or damage to property, or injury to persons, can be accepted by the manufacturer or the MG Authorised Repairer who supplied the publication, except in respect of personal injury caused by the negligence of the manufacturer or the MG Authorised Repairer .

Warranty and Service

Please consult the owners section at www.mg.co.uk for the warranty terms and conditions, warranty statement,exemptions and service item renewal schedule.

Symbols Used

The following symbols used within the handbook call your attention to specific types of information.

Warning

This warning symbol identifies procedures that must be followed precisely, or information that must be considered with great care, in order to reduce the risk of personal injury or serious damage to the car.

IMPORTANT

IMPORTANT
The statements stated here must be followed strictly, otherwise your car could be damaged.

Note

Note: This describes helpful information.

This symbol indicates parts described must be disposed of by authorised persons or bodies to protect the environment.

Asterisk

An asterisk (*) appearing after the title or the text, identifies features or items of equipment that are only fitted to some models, and may not be fitted on the vehicle your purchased.

Illustration Information

Identifies components being explained.

Identifies movement of components being explained.

In an Emergency

IMPORTANT
Remember the breakdown safety code If a breakdown occurs while travelling: • Wherever possible, consistent with road safety and traffic conditions, the car should be moved off the main thoroughfare, preferably into a lay-by. If a breakdown occurs on a motorway, pull well over to the inside of the hard shoulder. • Switch on hazard lights. • If available, position a warning triangle or a flashing amber light 50 to 150 metres (150 to 500 ft) behind your vehicle to warn approaching traffic. Note it is a legal requirement of some countries that a warning triangle is carried in the vehicle, if in doubt consult the local highways agency for further information. • Consider evacuating passengers through nearside doors onto the verge to reduce risk of injury in the event of collision.

Vehicle Identification Information

Vehicle Identification Markings (Gasoline)

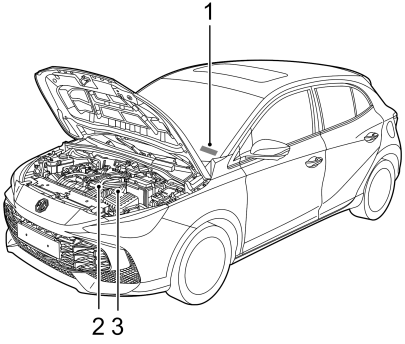

Vehicle Identification Markings (HEV)

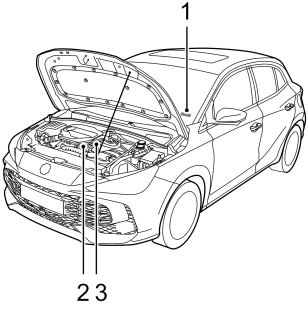

1 Vehicle Identification Number (VIN)

2 Engine Number

3 Transmission Number

When communicating with an MG Authorised Repairer, always quote the Vehicle Identification Number (VIN) . If the engine or transmission is involved, it may be required to provide the identification numbers of these assemblies.

Location of Vehicle Identification Markings

Vehicle Identification Number (VIN) Location

- On the floor under the front right seat;
- Stamped on a plate visible through the bottom left hand corner of the windscreen;
- On the identification plate;
- On the inner side of the tailgate visible by opening the tailgate.

Note: The DLC is located in the driver footwell above the accelerator pedal. The VIN information can be extracted from the vehicle using the approved diagnostic equipment.

Engine Number Location

Stamped on the front left of the engine (view from the front of the engine).

Transmission Number Location

On the surface of the transmission housing in the engine compartment or on the surface of the transmission valve body cover. The transmission numbers of certain models are only visible by raising the vehicle, please contact a local Authorised Repairer.

Vehicle Identification Plate

The Vehicle Identification Label is located at the lower side of right side the B pillar, it contains the VIN, engine type, trim and paint codes, along with other important vehicle details.

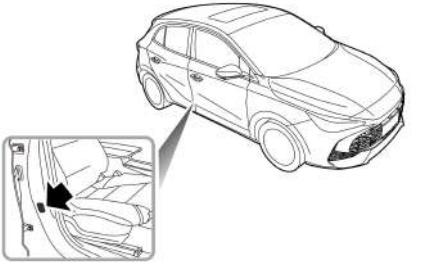

Instructions for Use of Hybrid Vehicle*

Effects of Ambient Temperature

Extremely high or low temperatures will affect the performance of the high-voltage battery pack and the vehicle. It is recommended that where possible the vehicle should be used within the temperature range of -30℃~55℃ . This will ensure that the vehicle is in the optimum working state, and help extend the service life of the high-voltage battery pack.

Instructions for High Voltage Battery Pack Recycling

If you decide not to use the recommended MG Authorised Repairer to dispose of your high voltage battery, the responsibility of the consequences of environmental pollution or accidents must be bourne by the owner.

The high-voltage battery pack contains several lithium based battery cells. Arbitrary disposal may cause pollution, hazard and damage to the environment. The high-voltage battery pack MUST be recycled by an MG Authorised Repairer or a professional approved dismantling agent. Please refer to the following information and requirements.

- ONLY qualified personnel should work with the high voltage system - there is danger of DEATH.
- High voltage safety: the high-voltage battery pack contains high voltage components such as lithium battery packs and high voltage wiring harness; DO NOT attempt to dismantle any area of this system, suitably trained professional staff must observe insulation safety protection before working on or near the high voltage system.

- Transportation: The high-voltage battery pack is classed as a Category 9 hazardous material and must be transported by vehicles qualified in transporting Category 9 hazardous materials.
- Storage: All HV components (including batteries) should be stored at room temperature and in a dry environment. They must be kept away from dangerous sources, such as flammable objects, heat and water sources.

It is strongly recommended that the used high-voltage battery pack generated from vehicle scrappage or any other reasons should be disposed of by an MG Authorised Repairer. Please consult an MG Authorised Repairer for more details.

Precautions in the Event of an Accident

Ensure the vehicle is in P gear and the vehicle power system/ignition is OFF.

If any cables on the vehicle are exposed, in order to prevent electric shock or even death DO NOT make any contact with any cable.

If the vehicle catches fire, and the fire is small and slow, a carbon dioxide extinguisher can be used to extinguish the fire, and contact the fire services as soon as possible; if the fire is large and spreading quickly, immediately evacuate the vehicle and contact the fire services immediately.

If the vehicle is involved in a collision, it cannot be re-started, the negative cable of 12V battery and Manual Service Disconnect (MSD) MUST be disconnected prior to rescue.

When the vehicle is completely or partially immersed in water, switch off the vehicle power system and evacuate the car immediately. The negative cable of 12V battery and Manual Service Disconnect (MSD) MUST be disconnected prior to rescue or as soon as the vehicle is refloated/removed from the water. Observe the water/vehicle for any abnormal signs such as excessive bubbles or noises, this may indicate battery short circuit issues. If no signs are evident, there should not be a shock risk from the bodywork and recovery can commence.

After the accident is resolved, please contact an MG Authorised Repairer for maintenance.

High Voltage System

All high voltage components have warning labels attached - please observe these warnings and any requirements when operating within or close to these areas.

ONLY qualified personnel should work on, or with, the high voltage system - there is danger of DEATH.

The high voltage system component layout is shown below:

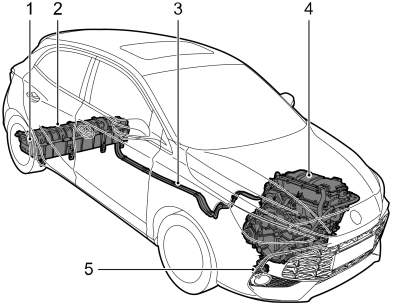

1 Manual Service Disconnect (MSD)
2 High Voltage Battery (ESS)
3 High Voltage Harness
4 Electric Drive Transmission
5 Electric A/C Compressor

Crash Outage Control

If a serious collision occurs, the vehicle will automatically cut off the high-voltage output to ensure personal safety.

Brief Introduction to Vehicle Functions

2

Instrument Pack 30

Warning Lights and Indicators 34

Lights and Switches 47

Wipers and Washers 55

Horn 59

Rearview Mirrors 60

Windows 63

*Sunroof** 66

Sunvisor 69

Interior lighting 70

Power Socket 72

Storage Devices 75

Cup Holder 78

Instrument Pack

Instrument Pack—Type A (HEV Models)

1 Active Safety
2 Warning Lights and Indicators
3 Speedometer
4 Message Centre
5 HEV Mode
6 Energy Recovery Mode
7 Power Meter
8 Driving Mode
9 Fuel Gauge and Driving Range
10 Power System Status
11 Engine Coolant Temperature
12 Gear Display

Instrument Pack—Type B (Gasoline Models)

1 Active Safety
2 Warning Lights and Indicators
3 Speedometer
4 Message Centre
5 Tachometer
6 Driving Mode*
7 Fuel Gauge and Driving Range
8 Engine Coolant Temperature
9 Gear Display

Instrument Information Display Operation

The message centre function can be selected when the vehicle is powered on by using the buttons on the right hand side of the multifunction steering wheel as follows:

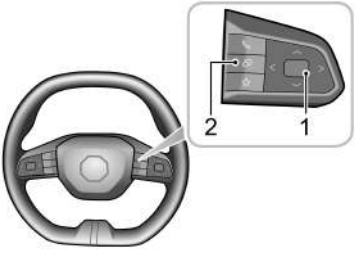

1 Function Adjustment Button (OK button)
- Push the button up, down, left and right to switch the items displayed in the message centre.
- Push the button up and down to make adjustments.
- Short press the button to confirm, or long press to reset.

2 Infotainment / Instrument Switching Button
The Infotainment / Instrument Button is a multi-use key. Pressing this button will switch control between the infotainment system or instrument pack.

Message Centre

The message centre provides the following information:

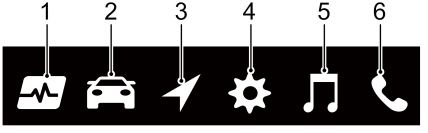

1 Health Centre
Display tire pressure monitoring and warning information, etc.

2 Trip Computer
Display driving mileage since startup and other information.

3 Navigation

4 Settings

Can set the backlight adjustment and speed limit, etc.

5 Media

6 Bluetooth Phone

Warning Message

The message centre in the instrument pack displays any warning messages via a pop-up box. The warning messages are mainly classified into:

- Operation Instructions
- System State Prompts
- System Malfunction Alert

Please follow the text prompts or refer to the relevant control system sections for the failure cause, actions and appropriate solutions.

Warning Lights and Indicators

When the vehicle is starting or traveling, if the warning lights or indicators appear in the instrument display, it indicates that the relevant system is in a certain state or is faulty. Some warning lights illuminate or flash with warning tones or prompt message.

Please carefully read the following instructions to understand the meaning of relevant warning lights and indicators. In case of a failure, please take any necessary actions in an appropriate time and contact an MG Authorised Repairer for service as soon as possible.

Name	Icon	Description
Dipped Beam Indicator		Dipped beam headlamp is turned on.
Main Beam Indicator		Main beam headlamp is on.
Automatic Headlamp Indicator*		The auto headlamp function is enabled.
Side Lamp Indicator		Side lamps are on.

Rear Fog Lamp Indicator		The rear fog lamps are turned on.
Direction Indicator Lamp		When the left or right turn signal lamp flashes, the direction indicator lamp on the corresponding side also flashes. If the hazard warning lamps are turned on, both direction indicator lamps will flash simultaneously. If either direction indicator lamp in the instrument pack flashes very rapidly, it indicates the turn signal lamp on the corresponding side has a failure.
Airbag Warning Lamp		If this lamp illuminates or fails to extinguish, it indicates a failure in the SRS or seat belt. Stop the car as soon as safety permits and power off the vehicle. There may be a risk that the SRS system or seat belt is not able to work properly if a crash accident occurs.
Seat Belt Unfastened Warning Lamp		If this lamp illuminates or flashes, it indicates that the seat belt for an occupied front or rear seat remains unfastened.
Anti-theft System Warning Lamp		If this lamp illuminates, it indicates that no valid key is detected, in which case please use the correct key, or put the smart key in the alternative starting position. For details, refer to "Alternative Starting Procedure" in "Starting and Driving" section.

Tyre Pressure Monitoring System (TPMS) Warning Lamp		If this lamp illuminates, it indicates that a tyre pressure is low. Please check the tyre pressure. If this lamp flashes and then remains ON after a period of time, it indicates the system has a failure.
Electric Power Steering System (EPS) Warning Lamp		If this lamp illuminates, it indicates that the electric power steering system has a general failure, and its performance is reduced. If the lamp still illuminates after restarting the vehicle and driving for a short while, please contact an MG Authorised Repairer immediately.
		If this lamp illuminates, it indicates that the electric power steering system has a general failure relevant to steering angle. If the lamp still illuminates after restarting the vehicle and driving for a short while, please contact an MG Authorised Repairer immediately. If this lamp flashes, it indicates that the electric power steering system has a severe failure, making it hard to steer. Stop the car as soon as safety permits, power off the vehicle, and contact an MG Authorised Repairer urgently.

Dynamic Stability Control/Traction Control System Warning Lamp		If this lamp illuminates, it indicates that the dynamic stability control system/traction control system has failed. If this lamp flashes while driving, it indicates that the system is operating to assist the driver.
Dynamic Stability Control/Traction Control System OFF Warning Lamp		The dynamic stability control/traction control system is turned off.
AUTO HOLD System Status Indicator Lamp		The AUTO HOLD system is operating to assist the driver.
		The AUTO HOLD system has a failure.
		The AUTO HOLD system function is activated in Standby state.
Electronic Parking Brake (EPB) System Indicator Lamp*		If this lamp illuminates, it indicates that the EPB is enabled. If this lamp flashes, it indicates that the vehicle is parked on a slope with an excessive angle or the electronic parking brake system has failed, in which case please park the vehicle on a suitable safe road.

Electronic Parking Brake (EPB) System Malfunction Indicator Lamp*		It indicates that the EPB system has a failure.
Brake System Malfunction Indicator Lamp		If this lamp illuminates it indicates that the brake system has a failure, please stop the car as soon as safety permits and switch the vehicle off.
ABS Malfunction Indicator Lamp		Anti-lock brake system fails. If an ABS failure occurs while driving, the ABS function will be disabled while normal braking will still be available.
Low-voltage Battery Charging System Malfunction Indicator Lamp		If this lamp illuminates after starting the car, it indicates that low-voltage battery charging system has failed. If this lamp flashes, it indicates low battery voltage, the prompt message will appear in the instrument pack. The system will then restrict operation or switch off some electrical appliances, please start the vehicle to charge the low-voltage battery.
System Failure Message Indicator		Illumination of this warning lamp indicates that the vehicle has warning information stored within the instrument pack. Please view the failure message or important prompt message in the message centre. Refer to "Instrument Pack" in this section.

Adaptive Cruise Control System Indicator Lamp*		The adaptive cruise control system is activated and not in Standby state.
		The adaptive cruise control system is in Standby state.
		The adaptive cruise control system is activated.
Speed Limit Assistance System Indicator Lamp*		Manual speed limit assistance system is in Standby state.
		If this lamp illuminates, it indicates that the manual speed limit assistance system is activated. If this lamp flashes, it indicates that current speed is greater than the speed limit value.
		The intelligent speed limit assistance system is in Standby state.
		The intelligent speed limit assistance system is activated.

Constant Speed Cruise Control System Indicator Lamp*		The constant speed cruise control system is in Standby mode.
		The constant speed cruise control system is activated.
Cruise/Speed Limit System Malfunction Indicator Lamp		If this lamp illuminates the constant speed cruise control system, adaptive cruise control system or speed limit assistance system has detected a fault.
Engine Coolant Temperature Warning Lamp		When the engine coolant temperature warning lamp illuminates red, it indicates that the coolant temperature is high. High engine coolant temperature could result in severe damage. Please stop the car as soon as safety permits, switch OFF the START/STOP Switch and contact an MG Authorised Repairer immediately. If this lamp flashes, it indicates that the coolant temperature sensor has a failure. Please stop the car as soon as safety permits.
Engine Malfunction Warning Lamp		If this lamp illuminates, it indicates that there are some faults that could seriously affect the engine performance. Please stop the vehicle as soon as safety permits, switch the power OFF and contact an MG Authorised Repairer immediately.

Engine Emissions Malfunction Warning		If an engine fault occurs that will effect engine performance and emissions after starting the vehicle, this lamp will illuminate. Please contact an MG Authorised Repairer as soon as possible.
Particulate Filter Warning Lamp		If this lamp illuminates after the vehicle has been started, or whilst it is being driven, it indicates that the particulate filter needs to be regenerated or is currently being regenerated If this lamp flashes after the vehicle has been started or whilst being driven, it indicates that the particulate filter is full. Seek assistance from an MG Authorised Repairer.
Low Oil Pressure Warning Lamp		If this lamp illuminates after starting the vehicle, it indicates that the oil pressure is too low, which may result in severe engine damage. Please stop the vehicle as soon as safety permits and switch off the engine.
Speed Limit Sign Speed Indicator Lamp*		" NNN " indicates the speed limit sign speed that has currently been identified. When the vehicle speed is greater than the speed limit value, the lamp will flash. " — "indicates the speed limit sign has not been recognized.

Speed Limit Sign Ancillary Information Warning Lamp*		The speed limit sign currently identified has ancillary information. Please check.
		The road sign speed limit was not recognized and currently only the sound alarm is turned off. After a period of time, the sound alarm off icon in the lower left corner disappears.
		The road sign speed limit was recognized and currently only the sound alarm is turned off. After a period of time, the sound alarm off icon in the lower left corner disappears.
		Recognize the conditional speed limit and only the sound alarm is currently turned off. After a period of time, the sound alarm off icon in the lower left corner disappears.
		Simultaneous shutdown of overspeed alarm and intelligent speed limit assist system.
		Overspeed alarm fault.

Traffic Jam Assist System Indicator Lamp*		Traffic jam assist system is activated and not in Standby state.
		The traffic Jam assist system is in Standby state.
		The traffic Jam assist system is activated.
		The traffic Jam assist system has a failure.
Lane Keeping Assist System Indicator*		If this lamp illuminates, it indicates that the lane keeping assist system has detected a fault or is switched off. If this lamp flashes, it indicates that the lane keeping function is activated.

Forward Collision Assist System Indicator Lamp*		If this lamp illuminates, it indicates any function of the forward collision assist system is disabled. When the functions of the forward collision assist system are fully enabled, if the lamp stays on, it indicates that forward collision assist system cannot work properly. If this lamp flashes, it indicates that any function of forward collision assistance is in operation.
Rear Driving Assistance System Indicator*		If the rear driving assistance system is turned off, the radar is obscured, or the system malfunctions, the combination instrument panel will display corresponding prompt messages.
Power Battery Failure		This lamp will flash if the high voltage battery temperature is toohigh. Please stop the car as soon as safety permits, power offthe vehicle, and leave the vehicle immediately. Contact an MG Authorised Repairer at the earliest opportunity.
Driving Power Limited Indicator		This lamp will illuminate if the vehicle power has been limited.
Motor Fault Warning Lamp		When the light is on, there is a malfunction in the electric drive transmission motor or power electronic box.

Low Fuel Warning Lamp		If this lamp illuminates or flashes, it indicates that the fuel remaining in the fuel tank is low. If possible, please refuel before the low fuel warning lamp illuminates. When the fuel in the tank exceeds the low level alert line, this lamp will extinguish. If not, please contact an MG Authorised Repairer for service as soon as possible.
Driver Status Indicator*		When the driver monitoring system has failed or is temporarily unavailable, the status indicator remains illuminated in yellow. If driver fatigue or distraction is detected, the yellow warning status indicator lamp will flash.
ECO (Energy-saving Driving Mode Indicator)*		This light illuminates to indicate that the vehicle is in an energy-saving driving state.
Trailer Warning Lamp		A trailer lamp has failed.
Start Stop System Status Indication*		This light is constantly on to indicate that the start stop system is activated The flashing light indicates that the start stop system has not met the shutdown conditions.

Start Stop System Fault Warning Lamp*		This light will illuminate constantly to indicate a malfunction has been detected in the start stop function.
eCall SOS Indicator		The system is ready and an emergency service call (eCall) is in progress.
		The eCall system can send out a vehicle message to the call centre, but other eCall capabilities are limited due to a fault in the system.
		If the eCall system has failed and not operational, the indicator illuminates red.

Lights and Switches

Master Lighting

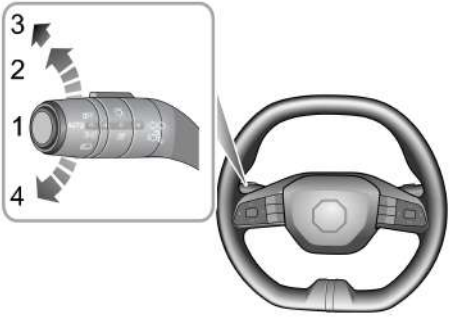

1 AUTO Lamp

2 Side Lamp / Switch and Backlight Illumination

3 Headlamp

4 AUTO Lamp Off

AUTO Lamp

With the vehicle power is in the ACC position, the AUTO lighting system is active by default (position 1). The system will automatically switch the side lamps, switch illumination and backlights on and off according to the intensity of current ambient light.

With the vehicle power in the ON/READY/RUNNING position, the AUTO lighting system will automatically switch the dipped beam headlamps, side lamps, switch illumination and backlights and off according to the intensity of current ambient light.

Note: This function is realized by a sensor mounted in your vehicle to monitor the exterior light levels in real time. It is installed in the upper part of the dashboard near the windscreen. DO NOT mask or cover this area. Failure to adhere to this may result in the headlamps being turned on unnecessarily.

Side Lamp / Switch Backlights

When the vehicle power is in the ACC position, rotate the master light switch to position 2 to switch on the side lamps, switch illumination and backlights.

When the vehicle power is in the ON/READY/RUNNING position, rotate the master light switch to position 2 to switch on the daytime running lamps, rear side lamps, switch illumination and backlights.

With the vehicle power in the OFF position, if the side lamps are on and the driver's door is open, an audible alarm will sound. The message centre will display "Lights On".

Headlamps

When the vehicle power is in the ON/READY/RUNNING position, rotate the master light switch to position 3 to switch on the dipped beam headlamps, side lamps, switch illumination and backlights.

Light Off

Turn the master light switch to position 4 to switch off the AUTO lamp function (this is automatically reinstated on the next power up cycle). Release the switch, and it returns to position 1 automatically.

Daytime Running Lamps

The daytime running lamps operate automatically when the vehicle power is in the ON/READY/RUNNING position. When the dipped beam is switched on, the daytime running lamps extinguish automatically.

Welcome Light

When the vehicle is unlocked, the system will operate the corresponding external lights automatically to provide a welcome according to the current intensity of ambient light.

Follow Me Home

After the vehicle power is turned off, pull the light lever towards the steering wheel, the Follow Me Home function is enabled. The corresponding external lights will illuminate.

Headlamp Levelling

The headlamp levelling should be adjusted as per the following table according to the vehicle load.

Location	Load
0	Driver, or driver & front passenger
1	All the seats occupied with no load in the trunk.
2	All the seats occupied plus an evenly distributed load in the trunk.
3	Driver only, plus an evenly distributed load in the trunk.

Main Beam Switch

Take care not to dazzle oncoming vehicles when switching between the main and dipped beams.

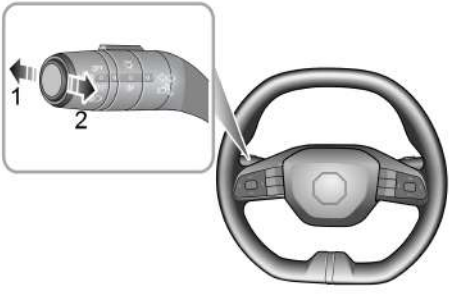

Headlamp High/Low Beam Switching

With the vehicle power in the ON/READY/RUNNING position and the dipped beam headlamps illuminated, push the light stalk lever (1) towards the instrument panel to turn on the main beam, and the main beam indicator on the instrument pack illuminates. Push or pull the lever (1 or 2) once again to switch to revert back to dipped beams.

Main Beam Flash

To briefly flash the high beam on and off, pull the lever towards the steering wheel (2) and then release.

Smart Main Beam System

The Automatic High Beam serves only as an auxiliary function. The driver must check the status of the front lamps, and turn on the front lamps when necessary.

The Automatic High Beam may not operate normally (but is not limited to) in the following situations, so the main and dipped beams should be switched manually:

- ***The windscreen is dirty, broken or obstructed by other objects blocking the view of the sensor.***
- ***The lamps of other vehicles are missing, damaged, blocked or cannot be detected due to weather and other reasons.***
- ***When pedestrians, non-motor vehicles and other objects with no obvious light or reflected light are encountered.***
- ***When the headlamps and tail lamps of other vehicles cannot be detected due to the sensor view being impaired due to undulating road conditions such as bends, dips or hills.***
- ***When the car is driving on a winding road or mountainous road.***
- ***The wiper switch is in the "Fast" position.***

The Smart main beam system is designed to detect the light intensity information of the vehicle in front using the vehicle forward camera and switch the main beam on or off when certain conditions are met. When the smart main beam system is enabled, the smart main beam indicator in the instrument pack illuminates. After the vehicle is started, the smart main beam system enters the ready state. Operation state can be set via the infotainment display.

In the case of automatic control, the system will automatically turn on the main beam when the surrounding environment is dark and there is no light detected from any vehicles ahead, or oncoming vehicles; when the surrounding environment is bright enough or the system detects the headlamps or tail lamps of the vehicle ahead or oncoming vehicles, the system will automatically turn off the main beam.

To enable the smart main beam system, the following conditions should be met:

1. The lighting lever switch is placed in the AUTO position and the dipped beams switched on via automatic control.

2 The vehicle is running with the speed exceeding 25 mph (40 km/h).

If the following conditions are met, the vehicle will automatically exit the smart main beam system. If the system is disabled, pushing the main beam ON switch twice quickly towards the instrument panel can enable the smart main beam system again. The function can be disabled for three times only in a starting cycle, otherwise it cannot be enabled again in the current starting cycle:

- When the smart main beam system is enabled and the dipped beam lights are automatically turned on and the lighting system is manually switched to the mainbeam lights.
- When the smart main beam system is enabled and the main beam lights are automatically turned on and the lighting system is manually switched to the dipped beam lights.
- When the smart main beam system is enabled, the main beams are automatically turned on and the main beam flash switch is operated.

IMPORTANT
The auto high beam function uses data from the front view camera, always keep the windscreen clean and free from residue in this area to maintain optimum performance of this system. Any damage in this area, such as stone chips must be repaired at the earliest convenience.

Direction Indicator Switch

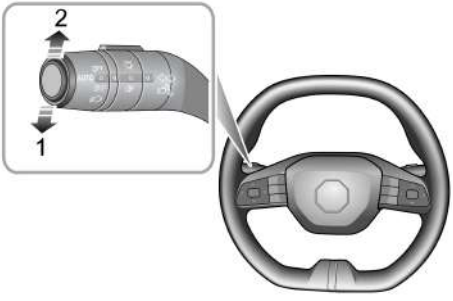

With the vehicle power is in the ON/READY/RUNNING position, move the lever down to indicate a LEFT turn (1). Move the lever up to indicate a RIGHT turn (2). The corresponding GREEN indicator lamp in the instrument pack will flash when the turning signal lamps are working.

Rotating the steering wheel will cancel the indicator operation (small movements of the steering wheel may not operate the self cancelling). To indicate a lane change, move the lever briefly and release, the indicators will flash three times and then cancel.

Fog Lamps

In severe conditions (during foggy weather for instance), the fog lamps can provide additional light and improve the visibility of your car. Fog lights should only be used when visibility is below 100 m - other road users could be dazzled in clear conditions.

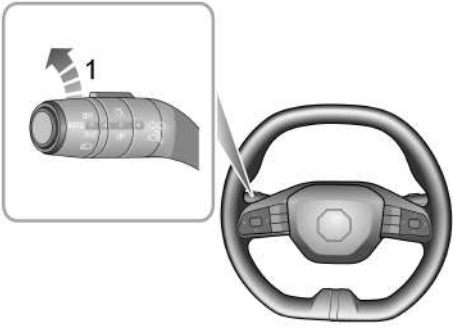

Rear Fog Lamps

With the vehicle power in the ON/READY/RUNNING position and the headlamps turned on, rotate the switch to position 1 to turn on the rear fog lamps. The indicator illuminates on the instrument panel when the rear fog lamps are on.

Hazard Warning Lamps

Press the hazard warning lamp button at the middle of the centre vents ⚠ to operate the hazard warning lamps. All turn signal lamps and direction indicator lamps will flash together. Press the button again to switch off the hazard warning lamp. All turn signal lamps and direction indicator lamps will stop flashing.

Wipers and Washers

Windscreen Wiper and Washer Operation

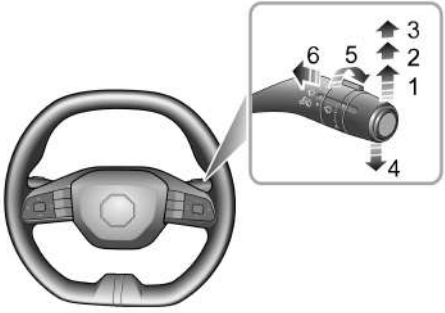

When the vehicle power is in the ACC/ON/READY/RUNNING position, the front wiper and washer will operate. Operate the lever to select different wiping modes:

- Automatic wipe (1)
- Slow speed wipe (2)
- Fast speed wipe (3)
- Single wipe (4)
- Automatic wipe speed adjustment*/Rain sensor sensitivity adjustment*(5)
- Wash and wipe (6)

Intermittent and Automatic Wipe

By pushing the lever up to the intermittent/automatic wipe position (1), the wipers will operate automatically.

On models without a rain sensor, rotate the switch (5) to adjust the intermittent wiper delay. This delay will also change with the vehicle speed. As the vehicle speed increases, the wiping interval decreases. As the vehicle speed decreases, the wiping interval increases.

On models that feature a rain sensor, rotate the switch (5). As the sensitivity increases, the wiping interval decreases. The rain sensor is fitted in the interior rearview mirror base to detect varying amounts of water outside of the windscreen. With automatic wipe, the vehicle will adjust the wiping speed according to the signals provided by rain sensor.

Note: When increasing the sensitivity of rain sensor, the wiper will operate once immediately; if the rain sensor detects continuous rainwater, the wiper will keep working. When no rain is present, it is recommended to switch off automatic wipe.

Slow Speed Wipe

By pushing the lever up to the slow speed wipe position (2), the wipers will operate slowly.

Fast Speed Wipe

By pushing the lever up to the fast speed wipe position (3), the wipers will operate at fast speed.

Single Wipe

Pressing the lever down to the single wipe position (4) and releasing will operate a single wipe. If the lever is held in single wipe position (4), the wipers will operate continuously until the lever is released.

Note: When the car is stationary, if the bonnet is opened, the front wiper/washer operation will be disabled.

IMPORTANT
• Avoid operating the wipers on a dry windscreen. • In freezing or extremely hot conditions, make sure that the wiper blades are not frozen or adhered to the windscreen. • In winter, remove snow or ice from around the wiper arms and blades, including the wiped area of the screen.

Wash and Wipe

Pulling the lever toward the steering wheel (6) will operate the front windscreen washers. After a short delay, the wipers will commence operating in conjunction with the washers.

Note: The wipers continue operating for three wipes after the lever switch is released. After several seconds, there will be a further wipe to remove any washer fluid from the windscreen.

IMPORTANT
If the washers fail to deliver the screen wash solution (dirt or ice may have blocked the jets), release the lever immediately. This will prevent the wipers from operating and the consequent risk of visibility being impaired by dirt smearing across the unwashed windscreen.

Rear Window Wiper and Washer Operation*

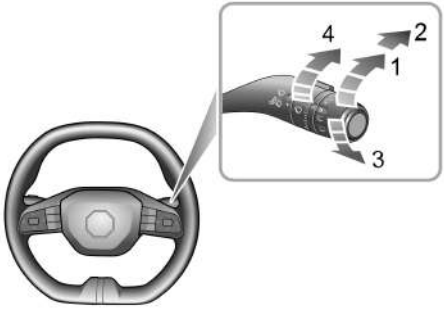

When the vehicle power is in the ACC/ON/READY/RUNNING position, the rear wiper and washer function is enabled. Operate the lever to select different wiping modes:

- Intermittent wipe (1)
- Wash and wipe (2 or 3)
- Wipe interval adjustment (4)

Intermittent Wipe

If the rear wiper switch is turned to intermittent wipe (1), the rear wiper will operate. It will complete 3 continuous wipes before changing to intermittent mode. The interval between the wipes can be increased/decreased via the switch (4).

Wash and Wipe

If the rear wash and wipe (2) is selected, the rear wiper and washer will operate together, and the rear wiper will operate at a fast speed. If the switch is released to intermittent wipe (1), the rear washer will stop operating.

If the rear wipe and wash (3) is selected, the rear wiper and washer will operate together. If the switch is released to the off position, the rear wiper and washer stop operating. After several seconds, there will be a further wipe to remove any fluid draining down the screen.

Note: When the tail gate is opened, rear wiper operations will be disabled.

Note: If the windscreen wipers are switched on, and Reverse gear is selected,, the rear wiper will operate.

Horn

Press the horn button area on the steering wheel (as indicated by the arrow) to operate the horn.

Note: The horn switch area on the steering wheel is also the cover plate of the driver's airbag. The illustration shows the position of the horn (indicated by arrow), please ensure that you press in this area to avoid any potential conflict with the operation of the airbag.

IMPORTANT
To avoid accidents, please do not press with excessive force or hit the cover when operating the horn.

Rearview Mirrors

The rearview mirrors consist of exterior rearview mirrors in the front of the vehicle, the left and right sides and interior rearview mirrors in the front of passenger compartment. They are used to reflect the situations behind or on both sides of the vehicle, thus expanding the driver's field of view.

The rearview mirrors are safety-critical parts. Proper use and reasonable mirror angle adjustment can improve driving safety and comfort.

Exterior Rearview Mirrors

The exterior rearview mirrors, as the widest parts mounted on the vehicle, are especially vulnerable in the event of a collision. The exterior rearview mirrors feature a manual or electric folding function, this helps avoid damage and allows folding when manoeuvring through narrow passages.

In addition to the folding function, each exterior rearview mirror features electric angle adjustment and heating elements, which can effectively remove frost or mist on the mirror.

Note: The vehicles or objects behind viewed in exterior rearview mirrors may appear further away than they actually are.

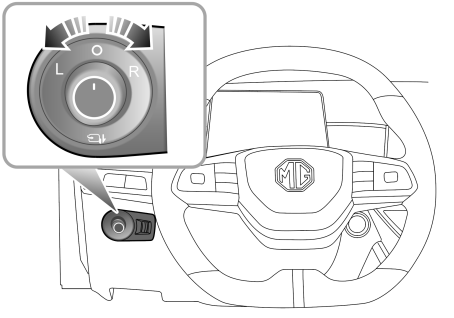

Electric Adjustment of Door Mirror Glass

The exterior rearview mirror glass adjustment switch is located under the instrument panel on the driver's side and the mirror adjustment function will work when the vehicle is powered on.

- Rotate the round knob in the middle to select left (L) or right (R).
- Move the knob in the desired direction to adjust the angle of the exterior mirror glass.
- Upon completion of the adjustment, rotate the knob back to the central position, this will ensure no accidental adjustment of the mirror.

Electric Folding of Door Mirror*

For vehicles fitted with electric door mirror folding, When the vehicle is powered on, rotate the knob to the middle position (O) , and push the knob down. The door mirrors will be folded automatically. Pushing the knob downwards again will return the mirrors to their original position.

Note: While unlocking/locking the vehicle, the exterior rearview mirrors will be deployed/folded automatically.

Note: For vehicles equipped with electrical folding door mirrors, if the mirrors have been moved from their positions by manual or accidental means, they can be reset by operating the knob to complete fold and deployment one time.

Mirror Glass Heating*

The exterior rearview mirrors have integral heating elements which disperse ice or mist from the glass.

The heating elements operate while the Heated Rear Window is switched on, that is, only when the vehicle is running/powered on, and the heated rear window is turned on .

IMPORTANT
• The electric adjustment and regulation of mirrors are operated using the electric switch, operating them directly by hand may result in the failure of related devices. • Washing or flushing door mirrors with high pressure water jets or car washes may result in electrical motor failure.

Interior Rearview Mirror

Before driving, adjust the body of the interior rearview mirror to achieve the best possible view. The anti-dazzle function of the interior rearview mirror helps reduce glare from the headlamps of following vehicles at night.

Manual Anti-dazzle Interior Rearview Mirror

Move the lever at the base of the interior rearview mirror to change its angle, so as to achieve the anti-dazzle function. Normal visibility is restored by pulling the lever back again.

Note: In some circumstances, the view reflected in a manual anti-dazzle mirror can confuse the driver as to the precise location of following vehicles.

Windows

Please correctly operate the windows to avoid danger. The driver shall instruct passengers on how to use windows and tell them safety precautions.

Ensure children are kept clear when raising or lowering a window.

DO NOT operate the power window controls continuously several times in a short time frame, otherwise the power window controls may be disabled to protect the motor. If this occurs, please wait a few seconds until the motor cools down. Do not disconnect negative battery during the time.

Power Operated Window Switch

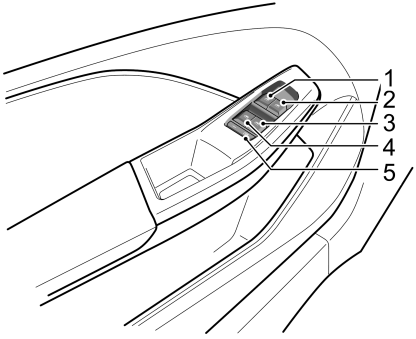

1 Front Left Window Switch

2 Front Right Window Switch

3 Rear Right Window Switch

4 Rear Left Window Switch

5 Rear Window Isolation Switch

Window Operation

The electric windows can be operated when the vehicle is powered on (Doors should be closed during operation).

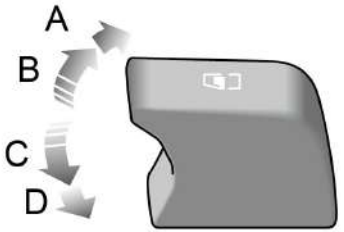

Press the window control switch (1 ~ 4) down to the 1st position (Position C) to lower the window, and pull the switch up to the 1st position (Position B) to raise the window. The window will stop moving as soon as the switch is released.

One-Touch Down

Press the window control switch (1 ~ 4) down to the 2nd position (Position D) and release, the window automatically descends to fully open. Window movement can be stopped at a desired position at any time by operating the corresponding switch during descent.

One-Touch Up with Anti-pinch*

Depending on vehicle specification, some windows may have the "One-Touch" Up and "Anti-pinch" function. Lifting the switch (1 ~ 4) to the 2nd position (Position A) and releasing will automatically close the window completely. Window movement can be stopped at a desired position at any time by briefly operating the switch again during ascent.

The 'Anti-pinch' function is a safety feature which prevents the window from ascending and allows the window to descend automatically a certain distance if an obstacle is sensed.

Note: The front and rear passenger windows can also be operated by individual window switch mounted on each door. If the rear window isolation switch has been activated, the window switches on rear doors will not work.

Rear Window Isolation Switch

Press the switch (5) to isolate the rear window controls (an indicator lamp in the switch illuminates), press again to restore control.

Sunroof*

The sunroof assembly consists of the electric sunroof glass and the sunshade.

Instructions for Use

DO NOT allow passengers to lean out of an open sunroof whilst the vehicle is in motion. Injuries may occur from objects such as tree branches.

Safety of the vehicle occupants must be observed at all times. DO NOT allow limbs to be placed in the moving path of the sunroof at any time, injury may occur.

- Avoid fully opening the sunroof during rain showers ;
- It is not recommended to open the sunroof at high speed;
- Where possible, please clean any residual water or raindrops off the sunroof prior to opening. Failure to do so may result in water entering the car ;
- DO NOT use abrasive materials to clean the sunroof glass. Use alcohol based solvent ;
- DO NOT hold the operating switch in the open/close position for any length of time after operation is complete, this could damage the electrical components ;
- Clean the sunroof regularly to maintain operation and performance. Visit an MG Authorised Repairer for service as required.

Sunroof Operation

When the vehicle power is in the ACC or ON/RUNNING/READY position, the sunroof can be operated.

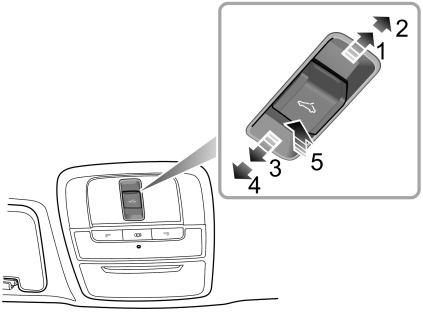

Opening the sunroof

Tilt Open

Press the sunroof switch(5), the rear edge of the sunroof will automatically tilt and open. You can stop the movement of the sunroof at any time by pressing the sunroof switch again.

Slide Open

Push the sunroof switch backwards to the 1st position(1) and hold, the sunroof will manually slide open. You can stop the movement of the sunroof at any time by releasing the switch. Firmly push the sunroof switch backwards to the 2nd position(2) and then release, the sunroof will fully open automatically. You can stop the movement of the sunroof at any time by pushing the switch backwards again.

Closing the Sunroof

Push the sunroof switch frontwards to the 1st position(3) and hold, the sunroof will manually close. You can stop the movement of the sunroof at any time by releasing the switch. Firmly push the sunroof switch forwards to the 2nd position(4), and then release, the sunroof will fully close automatically. You can stop the movement of the sunroof at any time by pushing the switch forwards again.

"Anti-trap" Function*

When the sunroof is being closed closed by using the one touch function, it will stop closing and open automatically after encountering an obstacle, allowing the obstacle to be removed.

Note: The anti-trap function of sunroof glass onlyworks when it is being closed by sliding.

Initialization of Sunroof

If power failure occurs whilst the sunroof glass is motion, or after the sunroof assembly or sunroof glass is replaced, it is required to carry out an initialization operation after power on.

Press the tilt-open switch of the sunroof to make the sunroof open completely, press the switch again for 5 seconds, until the sunroof glass vibrates accompanied with "click" sounds, release the switch to complete the sunroof initialization settings.

Note: Failure to initialize the sunroof may cause the sunroof to operate incorrectly, or failure of anti-trap function, or failure to respond to some switch operations.

Thermal Protection

To prevent the sunroof motor from being overheated and damaged, the motor is designed with a thermal protection function.

After the thermal protection function is activated, thesunroof does not respond to any other operationsexcept the closing operation. After the motor has cooleddown and exits the thermal protection state, the sunroofcan be operated normally until the next thermal protection event.

Sunvisor

For safety, do not use vanity mirror on the driver side whilst driving.

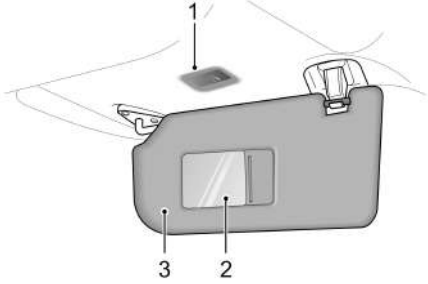

Sunvisors are arranged on the roof ahead of both the driver and the front passenger (3). The sunvisors are provided with vanity mirror (2)*and vanity mirror light (1)*.

Pull the sunvisor downward to use the vanity mirror. If the roof has vanity mirror lights, a vanity mirror light is switched on when the cover is opened, and it is switched off when the cover is closed.

Interior lighting

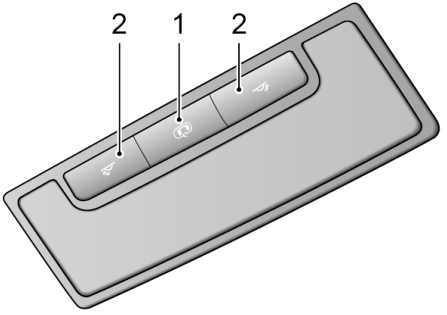

Press either of the switches (2) to turn the corresponding courtesy light on; press it again to turn off.

AUTO ON Function

Press the automatic courtesy lamp control switch (1) to turn on AUTO ON function; press it again to turn off the function.

When the AUTO ON function is enabled, the courtesy light illuminates automatically whenever any of the following occurs.

- The vehicle is unlocked.
- Any door is opened.
- The power supply is switched off when the vehicle equipped with a light sensor detects that the ambient light is in dark or the side lamp illuminates or the side lamp turns off for 30 seconds.

Note: If a door is open for more than a certain period of time, the front interior lamp will be switched off automatically to avoid battery drain. In case of low battery, the courtesy light will extinguish earlier.

Rear Courtesy Lights*

Press the switch (arrowed) to illuminate the rear courtesylights, press again to switch off.

Power Socket

Please ensure the socket lid is inserted when the power socket is not in use. This will ensure no debris or foreign objects enter the socket, preventing its use or causing short circuits.

The rated voltage of the 12 V power socket is 12 V, and the power rating is 120 W, please do not use the electrical appliance with its power exceeding the rating.

Using the power socket or USB port when the vehicle is not running will cause premature discharging of the vehicle battery, and prolonged use may cause flat battery, meaning the vehicle cannot be started.

Front Console Power Socket

The 12 V front console power socket is located in the front of the centre console. When the ignition or Start/Stop switch is in the ACC/ON/RUNNING/READY position and the blanking plug removed, it can be used as the power supply.

Based on different vehicle configurations, the USB port of the front console power socket vary as illustrated in the figure below.

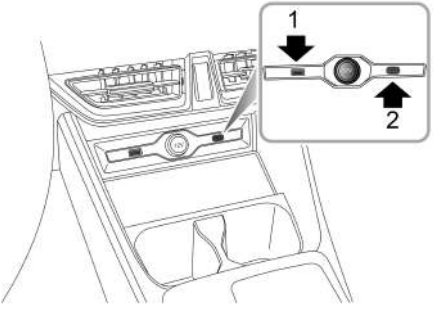

There are two USB ports equipped to the side of the 12 V front console power socket. When ignition or Start/Stop switch is in the ACC/ON/RUNNING/READY position, the

USB port can supply 5 V voltage as a power interface. Some USB ports can achieve data transmission function.

The maximum operating current of USB port is 2.1 A.

Rear Console Power Socket

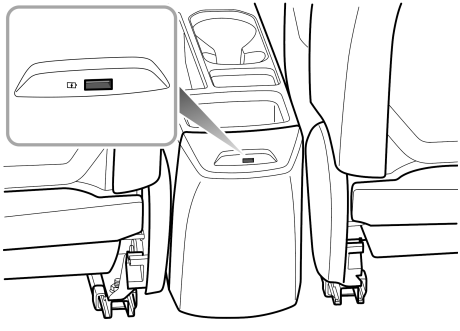

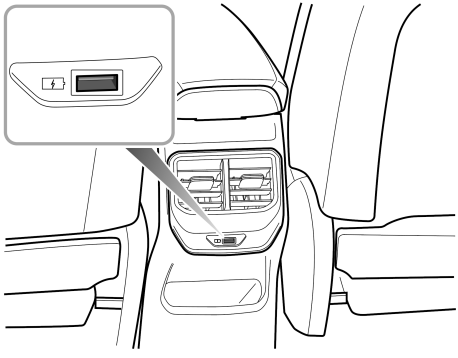

Some models also feature USB port at the rear of the centre console. When the ignition or Start/Stop switch is in the ACC/ON/RUNNING/READY position, the USB port can supply 5 V voltage as a power interface. Its maximum operating current is 2.4 A.

Power Socket of Interior Rearview Mirrors

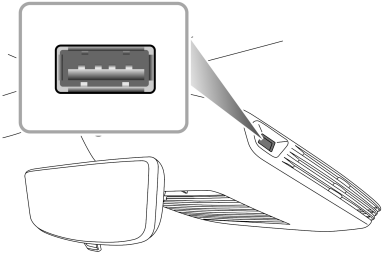

The models also feature one USB socket in the interior rearview mirror plinth. When the ignition or Start/Stop switch is in the ACC/ON/RUNNING/READY position, the USB port can supply 5 V voltage as a power interface, and its maximum operating current is 2 A.

Note: The vehicle's USB ports may not support some fast charging devices.

Storage Devices

Instructions for Use

- Please close all storage devices when the vehicle is in motion, to avoid personal injuries in cases of a harsh acceleration, emergency braking and a car accident during driving.
- Do not place liquid or flammable materials such as lighters in any storage devices to avoid heat in hot conditions from igniting flammable materials and leading to a fire.

Glove Box

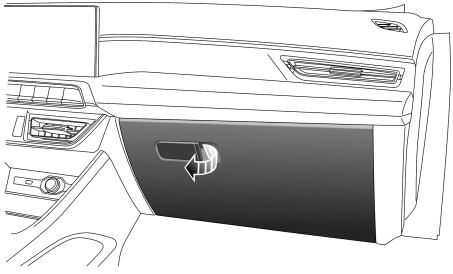

To open the glove box, press the open button (as indicated by the arrow) on it.

Push the lid forward to close the glove box. Make sure the glove box is fully closed when the vehicle being driven.

Storage Box

Centre Console Rear Storage Box

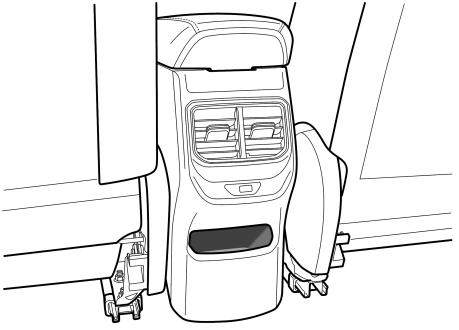

The centre console rear storage box is located behind the centre console.

Centre Console Armrest Box

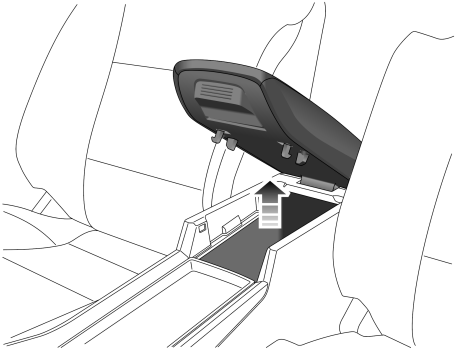

Lift the centre console armrest (as indicated by the arrow) to open the centre console armrest box. Gently press the lid down to close the centre console armrest box.

Glasses Box*

The glasses box should only be used only when the vehicle is stopped.

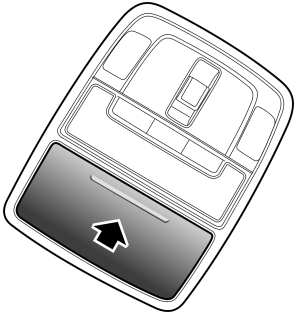

The glasses box is located in the proximity of the front courtesy lights. Press the panel (as indicated by the arrow), and place the glasses into the glasses box after opening it. Close the glasses box when it is not in use.

Note:

Only glasses that feature a standard frame can be inserted into the glasses box.

Cup Holder

Note: Do not place hot drinks in the cup holder while driving. Spillage may result in personal harm or damage.

Centre Console Cup Holder

Manual transmission center console

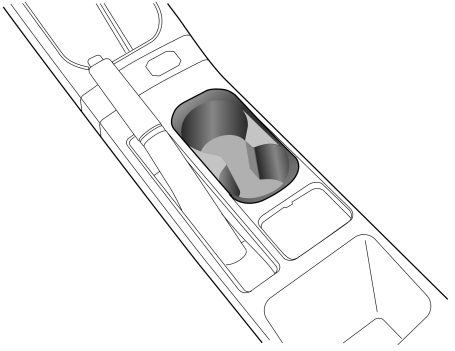

Automatic transmission center console

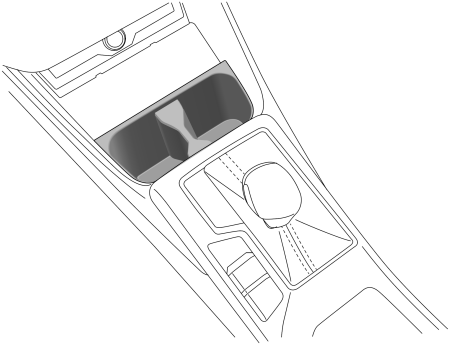

Knob shift center console

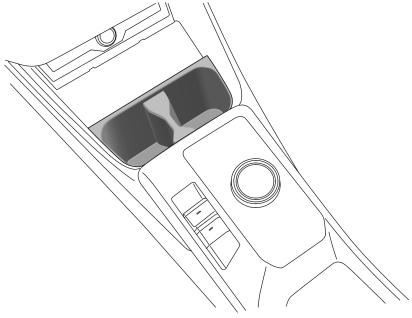

Thecenter console cup holder is located in front or behind the shift controlmechanism and can accommodate cups or beverage bottles.

Preparations for Driving

Load Carrying 82

*Towing** 83

Keys 85

Immobiliser System 90

Tailgate 94

Fuel System 96

Steering System Adjustment 99

Alcohol Interlocks 101

Load Carrying

DO NOT exceed the gross vehicle weight or the permitted front and rear axle loads. Failure may result in vehicle damage or serious injury.

Loadspace Loading

Ensure that the rear seat backrests are securely latched in the upright position when loads are carried in the load space behind the seats.

When luggage is carried in the load space, always ensure heavy items are placed as low and as far forward as possible, so as to avoid cargo shift in the event of an accident or sudden stop.

Drive carefully and avoid emergency braking or hard acceleration when loaded with large or heavy articles.

IMPORTANT
Traffic regulations must be observed when loading cargo, if the cargo extrudes the loadspace appropriate warning measures must be taken to warn other road users.

Towing*

General TowingSafety

Exceeding any load limits advised by MG Motor is dangerous. Consult the recommended load limits and loading prior to any journey.

Excessive towing loads reduce front tyre traction and steering control, too little trailer nose load can make the trailer unstable and cause it to sway.

Your vehicle can tow a trailer if you carefully observe load limits, use approved equipment, and follow the towing guidelines. Always check load limits before towing.

Towing loads in excess of the maximum towing weight can seriously affect vehicle handling and performance, this could damage your vehicle and drive-train.

When adding a towing device to the vehicle

When towing, all rear vehicle lights must remain visible to road users behind the vehicle and must not be obscured / partially obscured.

If towing light sources are obscured, a secondary lighting source shall be used such as a lighting board.

When not towing, the fitted towing device must not obscure any lighting source. If the towing device obscures or partially obscures a lighting source suchas the fog lamp it must be removed or retracted when not towing.

Tow bars

Only genuine MG approved towbars should be fitted to your vehicle. Only use the attachment method specified by the vehicle manufacturer for securing the towing hitch. Contact an MG Authorized Repairer for more information.

Safety chains

Safety chains must be used as a precautionary measure avoiding the trailer become unintentionally unhitched. Make sure the safety chain is securely attached to both the trailer and the vehicle prior to departure.

Altitude

Your engine delivers less power at higher altitude. If you tow a trailer in a mountainous area you should reduce the

combined vehicle and trailer weight by 10% for every 1000 m of elevation.

Gradients

Where possible, when towing, you should plan your journey to avoid steep gradients. The advised brake towing mass stated assumes a maximum gradient capability of 12% . Where possible it is recommended you drive on gradients less than 12% . Follow the trailer associations recommendations for suitable roads.

Running in period

Avoid towing a trailer during your vehicles first 1000 km.

Towing Mode

Your vehicle provides towing mode selection, it can be engaged or disengaged via:

1 Automatically: Connection or disconnection of the electrical connection with the trailer and the vehicle.

2 Manually: Enter the entertainment display to switch the function On/Off.

Note: When towing mode is engaged automatically, manual adjustment via the entertainment display is not possible.

When towing mode is activated, some vehicle functions will be limited or turned off, these include:

- Auto emergency brake*;
- Adaptive cruise control system*;
- Traffic jam assist system*;
- Lane departure assist system*;
- Rear driving assistance system*;
- Rear parking aid system.

Note: If the towed device is equipped with a tail light cluster, the vehicle also controls the trailer's lights after connecting the electrical connection.

Note: When operating the rear fog lamps, the trailer's rear fog lamps will also operate.

Keys

Overview

Please keep the spare key in a safe place - not in the car!

It is recommended that spare keys are not kept on the same key ring, since this may cause interference and prevent correct key recognition and therefore prevent the correct operation of the vehicle power system.

The smart key contains delicate circuits and must be protected from impact, high temperature, humidity, direct sunlight and fluid corrosion.

The vehicle is supplied with two smart keys, each one includes a backup mechanical key. The mechanical key can be used to unlock the door in emergency, but cannot be used to start the vehicle.

A smart key and a common key are provided for some low-configuration models.

The keys supplied delete text have been programmed for the security system on your vehicle. Any key that is not programmed to your vehicle can not start the car.

The smart key will only work within a certain range. Its working range is sometimes influenced by the key battery condition, physical and geographical factors. For safety consideration, after you lock your car using the smart key, please recheck that the car is locked.

Keys - Low Configuration

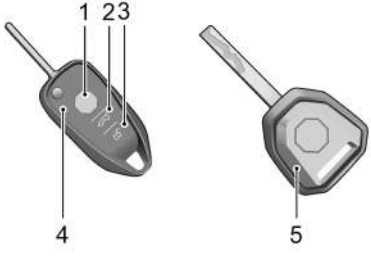

1 Lock Button

2 Tailgate Button

3 Unlock Button

4 Smart Key

5 Mechanical Key

Keys - High Configuration

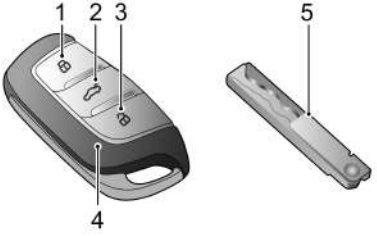

1 Lock Button

2 Tailgate Button

3 Unlock Button

4 Smart Key

5 Mechanical Key

If your key is lost/stolen or broken, a replacement can be obtained from an MG Authorised Repairer. The lost/stolen key can be deactivated. If the lost key is found, an MG Authorised Repairer can reactivate it.

Note: Any key made privately may not start the vehicle, and may affect the safety of your car. To obtain a suitable key replacement, it is recommended that you consult an MG Authorised Repairer.

Note: The new key cannot be offered to you immediately because it requires programming to the vehicle by the MG Authorised Repairer.

Note: If your car is equipped with induction-type wireless charging function, always keep the key more than 20 cm away from the mobile phone which is being charged to prevent the key from the interference of wireless charging device.

Note: Avoid operating the smart key close to strong radio interference devices (such as notebook computers and other electronic products), the normal function of the key may be affected.

Replacing the Smart Key Battery

Please use the picture guide to replace the smart keybattery if any of the following conditions occur:

- The smart key locking/unlocking function range isreduced;

- The message centre will display "Remote Key LowBattery, Please Replace".

Replacing the Smart Key Battery - Low Configuration

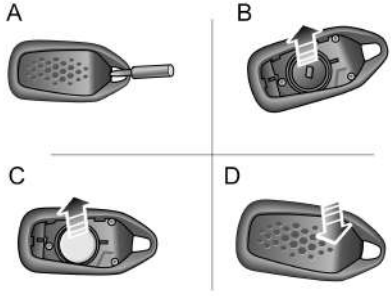

1 Gently insert a suitable tool into the key cover removal hole (A).

2 Securely hold the key and pry the tool until the cover of the casing is partially separated.

3 Carefully separate the cover from the key, remove the waterproof pad (B), and remove the used battery from the slot (C).

Note: Make sure that the polarity of battery is correct when installing a new battery.

Note: It is recommended to use a CR2032 battery for the remote control.

4 Put the new battery in the slot, make sure it is in full contact with the slot, and refit the waterproof pad.

5 Refit the cover and press tightly (D), ensure the gap around the cover is even.

6 Start the vehicle to resynchronize the key delete text.

Replacing the Smart Key Battery - High Configuration

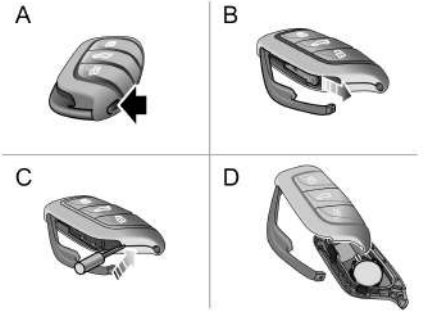

1 Press the button (A) on the smart key to eject the decorative trim.

2 Remove the backup mechanical key (B) in the arrowed direction.

3 Use a flat-bladed tool to insert into the side of the key (C),carefully prise off the battery cover and separate the upper and lower casings (D).

Note: Make sure that the polarity of battery is correct when installing a new battery.

Note: It is recommended to use a CR2032 battery for the remote control.

4 Remove the used battery from the slot.

5 Put the new battery in the slot, and make sure it is in full contact with the slot.

6 Refit the cover and press tightly, ensure the gap around the cover is even.

7 Refit the mechanical key, and close the decorative trim.

8 Start the vehicle to resynchronize the key with delete text.

IMPORTANT

- Use of an incorrect or inappropriate battery may damage the smart key. The new replacement's rated voltage, sizes and specifications must be the same as the old one.
- Incorrect fitting of the battery may damage the key.
- Disposal of the used battery must be strictly in accordance with relevant environmental protection acts.

Immobiliser System

Your vehicle is fitted with power system immobiliser and body anti-theft system. To ensure maximum safety and operation convenience, we strongly recommend you to read this section carefully to fully understand the activation and deactivation of anti-theft systems.

Power System Immobiliser

Power system immobiliser is designed to safeguard the vehicle from theft. A vehicle cannot be started until the power system immobiliser is deactivated.

Once a valid key is detected in the vehicle, powerimmobiliser will be deactivated automatically.

Body Anti-theft System

Locking and Unlocking

When the vehicle is locked, the turn signal lamps illuminate three times; when it is unlocked, the turn signal lamps illuminate once.

Operation of Door Lock System (Key)

Key Locking

- Using the remote key to lock: press the Lock button on the smart key to lock the vehicle after closing the doors, bonnet and tailgate.
- Using the mechanical key to lock: remove the driver side door lock trim cover, insert the key into the lockhole and turn clockwise to lock the car.

Key Unlocking

- Using the remote key to unlock: press the Unlock button on the key to unlock the vehicle.
- Using the mechanical key to unlock: remove the driver door lock trim cover, insert the key into the lockhole and turn counterclockwise to unlock the car.

Find My Car

After the vehicle has been left in a locked condition for a few minutes pressing the lock button again on the smart key will enable the Find My Car function. This function will identify the car by means of an audible and visual alert. Pressing the Lock button on the smart key again will suspend this operation. Pressing the Unlock button will cancel this operation. This feature can be set using "Vehicle Settings" in the entertainment display.

Note: If the start switch is not placed in ACC/ON/READY position or the remote key unlock is not activated within several seconds (approx 10 seconds) after the vehicle is unlocked with the mechanical key, the immobiliser alarm will be triggered.

Note: If no panels are opened within a few seconds after the vehicle is unlocked by using the remote key, all doors will automatically re-lock.

Operation of Door Lock System (Keyless)*

The keyless entry system can lock and unlock the doors or open the tailgate as long as you carry the smart key and approach to the car.

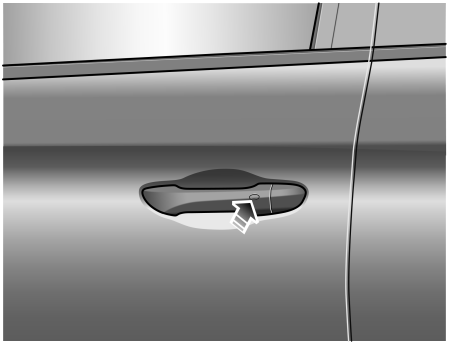

Note: Ensure the distance between the smart key and the door handle is within 1.5 m range in order to lock and unlock the doors in a keyless way.

Keyless Locking

After switching the START/STOP switch to the OFF position and exiting the car, press the door handle button once before moving away from the car to lock all doors and tailgate (no need to press the lock button on the

key). Note, this will also arm the alarm and immobilise the vehicle.

Keyless Unlocking

Press the button at the front door handle once to unlock the door, and pull the door handle to open the door.

Note: When the vehicle is locked, if you are within the smart key range and operate the door handle button, but carry out no further action, after 30 seconds the vehicle will automatically re-lock itself to remain secure.

IMPORTANT
After the door is locked by using the key, press the button on the door handle to unlock the vehicle. If the vehicle can not be unlocked or locked normally, please contact a local MG Authorised Repairer.

Mislock

If the driver's door is not fully closed when the smart key lock button is pressed, or the START/STOP switch has not been switched OFF, the vehicle horn will sound once, indicating a mislock. In this case, none of the doors will lock, the alarm system will not be armed.

If the driver's door is closed, the passenger door, bonnet and tailgate are not fully closed, the horn sounds once to indicate mislock when the car undergoes locking operation. However, the 'partial arming' attributes of the security system will enable as much of the system to be armed aspossible (all fully closed doors, bonnet or tailgate apertures will be protected, but an open door will not!). The alarm indicator will flash. As soon as the open aperture is closed, the system will automatically revert to an armed state. If the remote key is placed back (or left behind) in the car and the opened door is closed, the entire vehicle will automatically unlock.

Note: When the entire vehicle is locked, only unlock and open the tailgate, reposition (or leave) the remote key in the car and close the tailgate. At this time, the tailgate will automatically pop open and cannot be closed

Anti-theft Alarm

If the anti-theft alarm has been triggered, the car horn will sound continuously. The anti-theft alarm can be deactivated using the following operations:

- Press the Unlock button on the smart key.

- If you are carrying the smart key, and press the button on the door handle.
- If the smart key is within the vehicle, set the START/STOP switch to the ACC/ON/READY position.

Interior Lock Switch

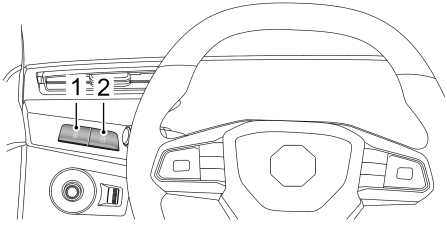

1 Unlock Switch

2 Lock Switch

When the body anti-theft system is disabled, press the interior lock Lock switch (2) after closing all doors to lock all doors; press the Unlock switch (1) to unlock all doors.

Note: If the vehicle anti-theft system is set, pressing the lock/unlock switch of interior locks will not lock/unlock doors but will trigger the alarm system.

If all doors, bonnet and tailgate are closed, press the interior lock Lock switch, the yellow indicator on the Lock switch illuminates.

If a non-driver door, bonnet or tailgate is not fully closed, press the interior lock Lock switch, the yellow indicator on the Lock switch flashes.

Interior Door Handle

Pull the interior door handle to unlock and open the door.

Auto Lock When Driving

All the doors will be locked automatically when the vehicle speed exceeds 10 mph (15 km/h).

Automatic Unlock

When the vehicle power is turned off, all the doors unlock automatically.

Tailgate

If the tailgate can not be closed due to the type of cargo loaded, or the weatherstrip seal is damaged, it is recommended you close all windows during driving, select the face distribution mode of the air conditioning, and set the blower to maximum speed, so as to decrease any fumes entering the vehicle.

Prior to opening or closing the tailgate always ensure there are no people or objects that may obstruct operation. This may cause physical harm or damage.

Tailgate Open/Close Mode

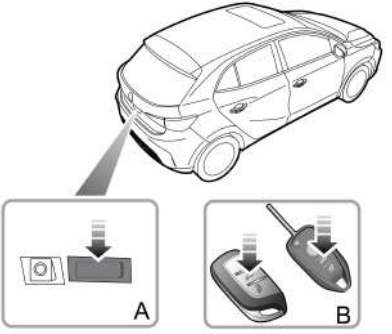

The tailgate can be opened or closed using the following methods:

- ***Open the tailgate using the key:*** With the Start switch in OFF state, long press the tailgate button (B) on the remote key to manually open the tailgate.
- ***Open the tailgate from outside the vehicle*:*** When the vehicle is unlocked or the matched key can be detected within 1 m range around the tailgate, directly

press the open switch (A) on the tailgate to open the tailgate.

Tailgate Emergency Open

A tailgate emergency open switch is located in the tailgate catch assembly.

To access the mechanism, lower the rear seat to gain access to the tailgate trim. Identify the emergency release mechanism blanking plug (A).

Remove the plug trim, insert a suitable flat bladed tool into the release slot and rotate counterclockwise to open the tailgate (B).

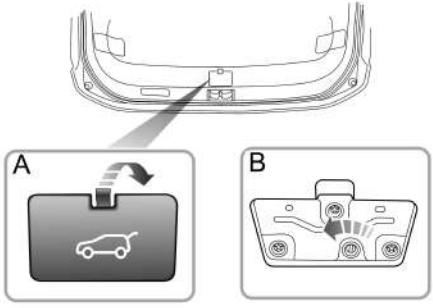

Fuel System

Fuel Requirements

Use only gasoline which meets the national standards and the OEM specifications. Serious damage to the catalytic converter, a reduction in engine power / torque and increase in fuel consumption will occur if the wrong fuel is used.

Please carry out refueling according to the information on the refueling label. Refer to "Main Engine Parameters" in the "Technical Data" section for details.

E5: Unleaded petrol fuel containing a maximum 2.7% (m/m) of oxygen and a maximum 5% (v/v) of ethanol.

E10: Unleaded petrol fuel containing a maximum 3.7% (m/m) of oxygen and a maximum 10% (v/v) of ethanol.

If a lower grade of fuel is used, an engine knocking noise may occur, please use the recommended or above grade gasoline as soon as possible. If the engine knocking noise is still noticeable after using the recommended or above grade fuel, please contact an MG Authorised Repairer immediately. It is permitted that the octane number of the gasoline is higher than that required by the engine, but it is not advantageous for engine output power and fuel consumption.

Fuel Filler

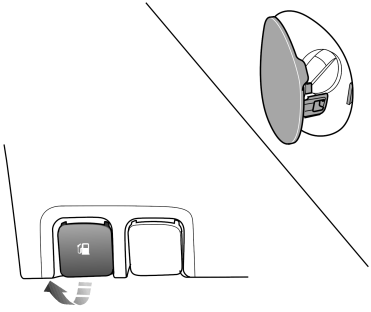

Fuel Filler Flap

The fuel filler flap is located on the rear left-hand wing.

Pull the fuel filler flap release handle under the driver dashboard panel to open the flap.

Fuel Filler Cap

Slowly rotate the fuel filler cap counterclockwise to release the pressure inside the tank before opening it.

After refueling, replace the fuel filler cap and tighten it until you hear a "click".

Note: The fuel filler flap can only be locked when the door is locked.

Refueling

Vehicle fuel gases are highly flammable and, in confined spaces, are also extremely explosive.

Always take care when refueling:

- Turn off the power system;
- Do not smoke or use a naked flame;
- Do not use a mobile phone;
- Prevent fuel spillage;
- Do not overfill the tank.

Do not fully refuel the tank if the vehicle is to be parked in direct sunlight or high ambient temperature - expansion of the fuel could cause leakage.

Start the engine after refueling. If the engine does not run smoothly, shut down and do not start it again, contact an MG Authorised Repairer immediately for advice.

IMPORTANT
During refueling, gasoline should be prevented from splashing on the surface of any painted or adjacent exterior parts. Contamination may cause the surface of the paint or adjacent exterior parts to become damaged.

Steering System Adjustment

Steering Wheel Position Adjustment

DO NOT attempt to adjust the position of the steering wheel while the car is in motion. This is extremely dangerous.

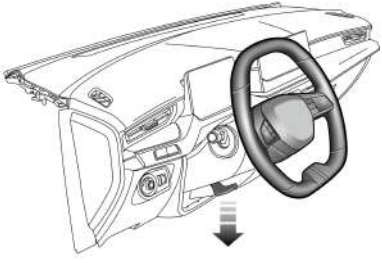

Adjust the position of the steering wheel to suit driving posture:

1 Fully release the locking lever (as indicated by the arrow in the figure).

2 Hold the steering wheel with both hands and tilt the steering column up or down to move the wheel into the most comfortable position.

3 Once a comfortable driving position has been selected, pull the locking lever fully up to lock the steering wheel into its new position.

Electric Power Steering

If the electric power steering fails, the steering may appear very heavy, which will significantly affect driving safety.

This series of models are equipped with the electric power steering system. This system only works once the vehicle is started.

IMPORTANT
When EPS is working, holding the steering wheel on full lock for long periods will result in a reduction in power assistance, causing a heavier feel to the steering.

Electric Power Steering Module Angle Initialisation

When the battery is reconnected after disconnection, the electric power steering (EPS) warning lamps may illuminate in yellow. In this case, the electric power steering (EPS) requires intialisation, i.e., rotate the steering wheel from lock to lock; after the initialisation is complete, the warning lamps extinguish.

Steering Wheel Heating*

Some models are equipped with a steering wheel heating function. The heating function can improve driving comfort in low temperature environments. The heating function can be turned on or off through the switch on the entertainment display screen.

Alcohol Interlocks

An Alcohol Lock is simply a detection device to assist in restricting a driver from operating a vehicle when the BAC level is over the limit. However, please keep in mind that you are always the first person responsible for road traffic safety, for your safety and the safety of other traffic participants, drink driving is strictly prohibited!

Your vehicle can be fitted with an alcohol lock, please contact customer service for details.

To operate the alcohol lock device, hold the handheld device and blow into the mouthpiece/orifice. By providing a breath sample the blood alcohol concentration will be analised. If the levels are below the preset limit you will then be able to start the vehicle.

Note: The handheld device should be placed in a location that is easily accessible and does not affect driving, please contact an MG Authorised Repairer for device installation and set up.

IMPORTANT
If the alcohol test fails, for safety reasons, please do not try to start the vehicle forcibly. If you suspect that the alcohol lock device is malfunctioning, please contact an MG Authorised Repairer.

Driving the Vehicle

Power System Start/Stop *104*

Economical and Environmental Driving *110*

*Gear Shift-Electric Drive Transmission** *113*

*Gear Shift-Continuously Variable Automatic Transmission (CVT)** *116*

*Gear Shift-Manual Transmission** *122*

*Drive Mode** *124*

Service Brake *125*

*Modes of Power** *127*

*Energy Regeneration** *128*

Power System Start/Stop

Starting the Power System (Key Start)*

When the vehicle is in motion, do not switching off the START/STOP switch or remove the key, otherwise the steering wheel may be locked, making it impossible to turn the vehicle.

Do not touch the key while the vehicle is in motion, otherwise it may cause the power system flameout!

The START/STOP switch is located on the right side of the steering column. Function of each position is as follows:

Position 0 (LOCK/OFF)

- The key can be inserted or removed.
- After the engine is stopped and the key is removed, turn the steering wheel to one side to lock the steering wheel.

Position 1 (ACC)

- The engine has not been started and the key cannot be removed.
- Some electrical equipment (such as the power windows, etc.) can work.

Position 2 (ON/RUNNING)

- When the vehicle is started, the engine runs, and all electrical equipment can work.

Position 3 (START)

- Start the engine.
- Release the key immediately after the engine starts, and the START/STOP switch will return to position 2 automatically.

Note: When the key is in position 0 of the START/STOP switch, if the driver's door is opened, a buzzer will sound to indicate that the key has not been removed.

Note: When the steering wheel is locked and the key cannot be turned from position 0 to position 1 , please turn the steering wheel slightly whilst turning the key to unlock the steering wheel.

Starting the Power System (Keyless Start)*

The keyless START/STOP switch is located in the trim panel to the left of the steering wheel. It is a push button Start/Stop switch. To operate the system, the smart key must be in the car.

The display states of the switch are described as follows:

Indicator Off (OFF)

- The engine is shut off in this position.

Yellow Light (ACC)

- When the system is in the OFF state and the START/STOP switch is pressed once, the vehicle enters

the ACC state, the yellow light of the START/STOP switch illuminates, and some electrical equipment (such as the power windows, etc.) can be operated.

Green Light (ON/READY/RUNNING)

- Whilst in the ACC state, pressing the START/STOP Switch without the footbrake being applied will place the system in the ON state, the green indicator will illuminate and some electrical equipment (such as instruments etc) will operate. Whilst in the ACC state, applying the footbrake and pressing the START/STOP Switch will crank and start the vehicle.
- The vehicle enters READY/RUNNING state and all electrical equipment can be operated after the engine is started.

Note: After switching off the START/STOP switch and opening the door, if the key is still left in the vehicle, the horn will sound continuously when the doors are closed.

If your car is subject to strong radio signals the keylessentry and start systems may suffer from interference andnot function correctly. Please see the 'Alternative StartingProcedure'.

Start the power system

Do not start and run the engine for a long time in an unventilated room. Exhaust fumes are harmful and contain carbon monoxide, which can cause unconsciousness or even death.

Starting Procedure (Key Start)*

1 Switch off all unnecessary electrical equipment (including the air conditioning).

2 For vehicles with automatic transmission, make sure the shift lever is in P or N position and press the brake pedal.

Note: When the shift lever is in any other position, the engine cannot be started.

3 For manual transmission vehicle, ensure neutral is selected and the clutch pedal is fully pressed; For HEV vehicles, ensure P is selected, the EPB applied and the brake pedal pressed.

4 Insert the key, rotate it to position the START position and then release key immediately after the engine has started.

Note: After the engine starts, if the key is not released immediately, the starter will continue to work, which will not only discharge the battery, but also damage the starter motor, catalytic converter and particulate filter.

Alternative Starting Procedure (Manual transmission model)

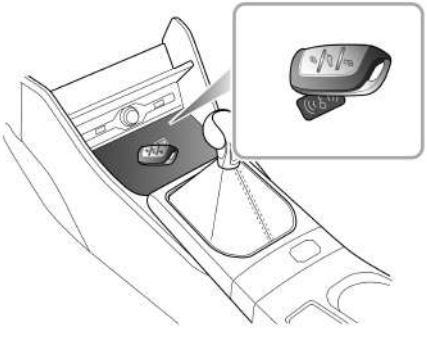

Alternative Starting Procedure (Automatic transmission model)

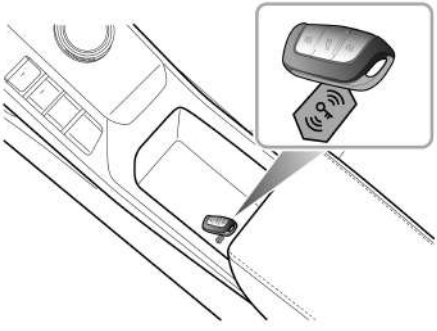

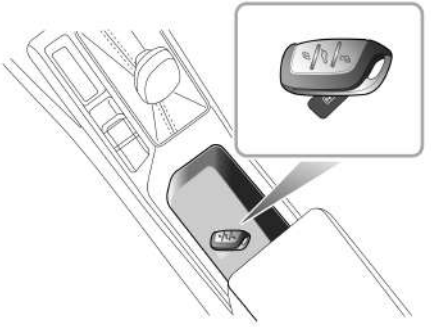

If the car is located in an area where there are strongradio signals causing interference or the smart key batterycondition is low, please use the following steps to attemptto start the car:

1 Place the smart key in the position and at the angle as illustrated.

2 Make sure the gear selection is in P or neutral position, then press the brake pedal and operate the Start switch to start the power system.

3 For manual transmission models, please place the gear lever in neutral, press the clutch pedal, operate the start switch, and start the power system.

After the battery of smart key is replaced or the car leaves the interference area, if the keyless start procedure can still not be used normally, seek an MG Authorised Repairer.

IMPORTANT
• If three consecutive attempts to start are unsuccessful, please seek assistance. Otherwise, multiple consecutive starts may cause damage to the power system and battery. • This car is equipped with an anti-theft system. Any privately prepared key cannot start the vehicle. • In environments with temperatures below -10 degrees Celsius, the time for the power system to start will increase. Therefore, when starting, turn off all unnecessary electrical equipment.

Stopping the Power System

Stop the engine as follows:

1 After safely stopping the vehicle, press the brake pedal (automatic) or clutch pedal (manual).

2 Apply the parking brake.

3 For vehicles with automatic transmission, ensure that the shift lever is P position.

4 For vehicles with manual transmission, ensure that the shift lever is in neutral position.

5 Operate the start switch to turn off the power system.

Economical and Environmental Driving

Running-in

The engine, transmission, brakes and tyres need time to "bed-in" and adjust to the demands of everyday motoring. During the first 900 miles (1500 km) , it is essential that you drive with consideration for the running-in process and heed the following advice:

- Do not allow the engine to exceed 3000 rpm in any gear or the vehicle speed to exceed 75 mph (120 km/h) .
- Do not operate at full throttle or allow the engine to labour in any gear.
- Do not drive at a constant speed (either high speed or low speed).
- Avoid heavy braking where possible.

After 900 miles (1500 km), engine speeds can be gradually increased.

Environmental Protection

Your vehicle has been designed with the latest technology in order to minimise the environmental impact of exhaust emissions.

Economical Driving and Maintenance

The following are some suggestions on reducing fuel and energy consumption and extending the service life of the vehicle:

- Maintain the correct tyre pressure. Insufficient air pressure will accelerate tyre wear and waste fuel.
- Do not carry unnecessary weight. Heavy loads will increase the engine load resulting in higher fuel consumption.
- Avoid engine idling for extended periods.
- Maintain slow and smooth acceleration and avoid harsh acceleration; change to a higher gear as soon as possible.
- Avoid labouring the engine or over running. Choose appropriate driving styles according to the road conditions.
- Avoid continuous acceleration or deceleration.
- Avoid unnecessary stopping and braking, maintain steady speed and attempt to anticipate traffic lights.
- Avoid traffic congestion and jam areas as much as possible.
- Anticipating obstructions and slowing down well in advance, avoids the need for unnecessary acceleration

and harsh braking. A smooth driving style not only reduces fuel consumption, but can reduce the emission of noxious gases.

- Do not ride the brake pedal, this can cause premature wear, overheating and increased fuel consumption.
- Maintain an appropriate speed on the highway. Appropriate speed can save fuel.
- Maintain the correct wheel alignment. Avoid collision with the kerb and reduce speed on uneven road surfaces. Out of specification wheel alignment will not only lead to excessive tyre wear, but also increases the engine load and fuel consumption.
- Avoid driving on mud or beaches. This will prevent corrosion of the vehicle underside.
- Maintain the vehicle in accordance with MG recommendations. Dirty air filters, oil etc., will reduce the engine's performance and raise fuel consumption.
- Do not stop the engine straight after high speed or long ascents or towing a trailer. Allow the engine to idle for 20 to 100 seconds depending upon driving loads and conditions. Avoid hard acceleration on a cold engine.

Note: Keep an appropriate distance from other vehicles to avoid emergency braking. This also reduces wear on the brake discs and pads.

Note: To extend the life of all components and reduce operating costs, regular MG Approved maintenance is needed.

Driving in Special Environment

Driving in Rain or Snow

Emergency braking, accelerating and steering on slippery roads will reduce the vehicle's handling performance and grip.

- When raining the windows may fog, reducing visibility (Use the Air-conditioning demist function)
- Grip will be reduced when it rains, so please reduce speed and drive carefully.
- Reduce speed when it rains.
- Avoid aquaplaning (the effect of a film of water between the tyres and the road) affecting steering and braking performance.

Driving through Water

Avoid driving through floods after heavy rain, this may lead to serious damage to the vehicle.

Gear Shift-Electric Drive Transmission*

Gear Shift Control

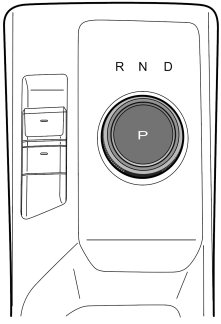

The shift control knob is in the intermediate steady state position, there are two unsteady positions clockwise and counterclockwise, the shift control knob will return to the intermediate steady state position once released.

Note: When shifting out of the P/N gear or into the R gear, it is necessary to apply the brake pedal.

- P Park

  In this position, the vehicle is locked, and the EPB is applied. Please use this gear when the vehicle is stationary.

  Press the P gear button, and the vehicle engages the P gear.

  Note: With the brake pedal released, if the driver seat belt is unfastened and the driver door opened, the vehicle will automatically shift into P gear.

- R Reverse

  Select this gear only when the vehicle is stationary and you wish to drive backwards.

  Apply the brake pedal, turn the shift control knob counterclockwise to the end and release. The vehicle will enter Reverse.

- N Neutral

  Select this gear when the vehicle is stationary (for example, waiting for traffic lights).

  When in Park, apply the brake pedal, turn the shift control knob clockwise or counterclockwise to the first non-steady state position and release. The vehicle will enter Neutral.

In Reverse, turn the shift control knob clockwise to the first non-steady state position and release. The vehicle will enter Neutral.

Whilst D is selected, turn the shift control knob counterclockwise to the first non-steady state position and release. The vehicle will enter Neutral.

- D Drive

This is used for normal driving.

In P , R or N , apply the brake pedal, turn the shift control knob clockwise to the end and release. The spring loaded shift control knob will return to a central position and the vehicle will enter Drive.

Protection Mode

When parking, drive the vehicle to a safe area on the premise of ensuring your own safety and complying with traffic regulations.

Shift System Malfunction

If serious functional faults are detected in the gear shifting system, the instrument pack will display "EP". At this time, for the sake of driving safety, when the speed is below a certain value, the power system will forcibly cut off the power transmission, and the vehicle will not be able to be driven! Please contact an MG Authorised Repairer immediately.

Electric Drive Transmission Motor Malfunction

When the system detects a fault with the electric drive transmission motor or controller, the warning indicator light illuminates red. Please park the vehicle safely and contact an MG Authorised Repairer immediately.

Power Limitation of Electric DriveTransmission

The electric drive transmission may become very hot in a high-temperature environments with frequent starting, frequent rapid acceleration and deceleration, long-term continuous steep climbing, and thus overload the electric drive transmission.

In some cases, to avoid motor damage, the system will implement power limitation. the warning indicator illuminates.

In this situation, stop at a safe place or maintain a lower load to continue moving at a constant speed to cool the motor. After the motor temperature drops and the warning indicator light goes out, normal driving can be reinstated.

If the electric drive transmission has cooled down for a long time (about 20 minutes) and the warning indicator has not disappeared, please park the vehicle safely and contact an MG Authorised Repairer immediately, otherwise it may seriously damage the electric drive transmission.

Gear Shift-Continuously Variable Automatic Transmission (CVT)*

Instructions for Use

The following information is very important; please read carefully before use:

- Before starting the vehicle, close the doors, confirm the shift lever is in P position, press the brake pedal and apply the parking brake.
- After the vehicle has started, maintain brake pedal application and ensure the parking brake is applied, then shift the lever to the required gear.
- Release the parking brake, brake whilst maintaining brake pedal application until you are ready to manoeuvre the vehicle. On a flat road, once the brake pedal is released, the vehicle will automatically begin to travel at a slow speed with the accelerator pedal not depressed.
- During driving, do not coast in neutral, this could cause an accident.
- Do not tow the vehicle with its front wheels on the ground, otherwise it could cause severe damage to the CVT transmission.

Gear Shift

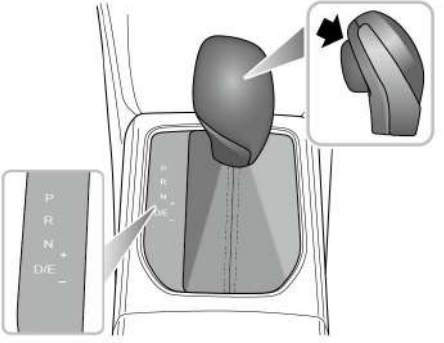

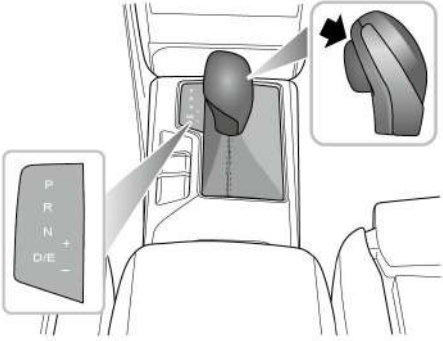

The automatic transmission is a CVT transmission.

Note: The highlighted letters or numbers on the instrument pack interface indicate the selected gear.

A sprung loaded lock button located in the gear lever is used to prevent mistakingly selecting P (Park) or R (Reverse) whilst the gear selector is in other positions.

Shift Lever Operation

DO NOT press the lock button when shifting gears, unless necessary.

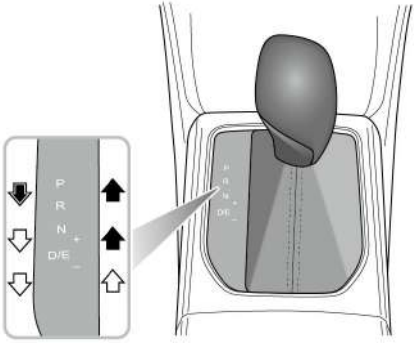

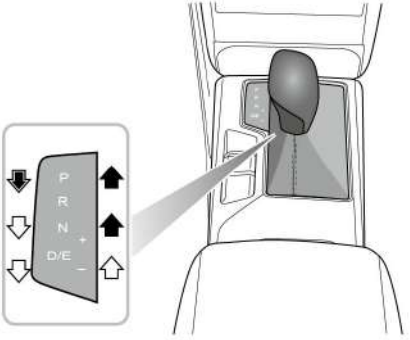

During any gear shift, operate the shift lever according to the instructions indicated by the following arrows:

⇨ Free gear shift.

➡ Press and hold the lock button to shift gear.

➡ Press and hold the lock button and apply the brake pedal to shift gear.

Shift Lever Position

⚠ ***The shift lever must be placed in P position when parked.***

⚠ ***DO NOT Switch the shift lever between D and R gears or into the P gear whilst the vehicle is in motion, otherwise, it may cause serious damage to the transmission or an accident.***

- P Park

  When the shift lever is in this gear, the transmission will be locked. This gear should only be used when the vehicle is stationary and the parking brake is applied.

  Note: When the vehicle is parking on a hill, press the brake pedal and apply the parking brake first before selecting P gear.

- R Reverse

  Select this gear only when the vehicle is stationary.

- N Neutral

  Select this gear when the vehicle is stationary and the engine will be running at idle speed for a short time (for example, waiting for traffic lights).

- D Drive

  This is used for normal driving and will allow automatic selection of gear ratios depending on vehicle speed and accelerator pedal position.
- E ECO

  Select this gear to prioritise economy over performance. The instrument pack displays ECO and E gear indicator lamps at the same time.
- Manual Mode

  Select this mode when manual gearshift is required. The instrument pack displays a number (1-8) to indicate the current gear the vehicle is in, the driver is reminded to make a gear shift via an upshift/downshift arrow.

  When the shift lever is in E gear, toggle the shift lever towards " + " direction to upshift to next available high gear; or toggle the shift lever towards " - " to downshift to next available low gear.

  Whilst in manual mode, if the driver makes an unreasonable gear selection, such as requesting an upshift during low engine speeds, or requesting a downshift during high engine speeds, the transmission will not respond and will remain in the current gear. If the vehicle is being driven and the engine speed falls below a preset threshold in certain gears, the transmission will automatically shift down to the next gear to avoid engine stalling; when the vehicle accelerates, if the engine speed increases continuously and exceeds the allowable maximum speed with no upshift request received, the transmission will automatically shift up to the next gear to protect the engine.

  To return to other gear modes, move the shift lever leftwards and select D.

Gearshift Speed

With D or E gear selected, the speed of one gear varies depending on the accelerator pedal position: a smaller throttle opening will result in the gear shift at a lower speed, and a larger throttle opening will cause the transmission to delay the gear shift action, until the gear shift is completed when the vehicle reaches a higher speed.

Kick-down

The drive wheels may skid when kick-down is activated on road surfaces with low adhesion, this may lead to the vehicle sliding out of control.

With D or E gear selected, pressing the accelerator pedal all the way down in one motion (also known as Kick-down) will provide better acceleration performance during overtaking. Under certain conditions, it will allow the transmission to shift to a lower gear immediately, and provide fast acceleration. Once the accelerator pedal is released, it will resume a suitable higher gear (based on the vehicle speed and the position of the accelerator pedal).

Protection Mode

When parking, drive the vehicle to a safe area on the premise of ensuring your own safety and complying with traffic regulations.

CVT Transmission Failure

If the transmission develops faults or works improperly, the engine emission malfunction indicator lamp in the instrument pack illuminates. In such a case, contact an MG Authorised Repairer for service as soon as possible.

Limp Mode

When some failures occur, the transmission will enter Limp Mode and will only function in some gears, in some cases it may fail to engage reverse, during this time the instrument pack will display the engine emission malfunction indicator lamp. In such a case, contact an MG Authorised Repairer for service as soon as possible.

Gear Shift System Failure

If some serious functional failures occur in the gear shift system, the instrument pack will display " EP ". During this

time, for safe driving, if the vehicle speed is below a certain value, the power system will forcibly cut off the power transmission, and the vehicle will not be able to drive! In this case, please contact an MG Authorised Repairer for service as soon as possible.

Gear Shift-Manual Transmission*

Gear Shift Lever

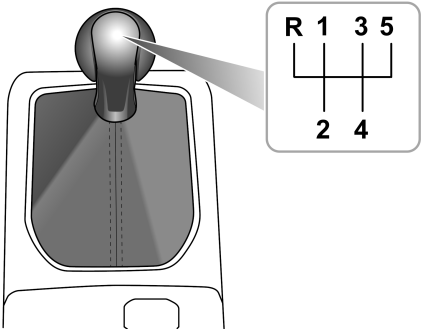

The manual transmission is a 5 -speed manual transmission with 6 gears, which are: 1st , 2nd , 3rd , 4th , 5th and R (Reverse) respectively.

Precautions while driving:

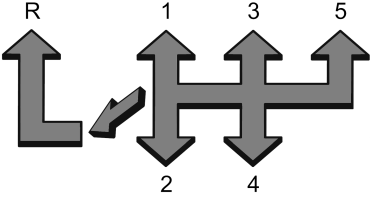

1 When selecting R gear, you must ensure that the vehicle is completely in stationary, wait for a moment and then fully press the clutch pedal, ensure the lever is in the N position, press the lever down and push it leftward, then push it forward into the R position, slowly release the clutch to engage drive.

After fully depressing the clutch pedal, please wait for 2 ~ 3 seconds before attempting to select R gear, failure to observe this could cause transmission damage.

2 Do not rest your hand on the gear shift lever while driving - pressure from your hand may cause premature wear to the gear shift mechanism.

3 Do not rest your foot on the clutch pedal when driving - this will cause premature and excessive clutch wear.

4 Do not hold the car stationary on a hill by slipping the clutch. This will cause premature clutch wear.

Note: In order to guarantee the smooth driving and good fuel economy of the vehicle, please shift at an appropriate time, and never allow the engine to run at a high speed for prolonged periods, this may cause engine damage.

Drive Mode*

It is not recommended to shift driving modes whilst driving, this diverts the attention of the driver away from the road ahead. If it is completely necessary then proceed with caution and always ensure you drive safely.

The vehicle operating modes enable different tuning modes for power response, steering feel, air conditioning performance and other functions.

By using the center console mode switch, you can switch between the following driving modes.

1 **Normal Mode**

The vehicle is balanced for daily driving.

2 **Sport Mode**

Sport Mode concentrates on providing more power to enhance the performance.

Constant use of Sport Mode will increase energy consumption.

3 **Eco Mode**

The vehicle is in the state of low energy consumption,which is used for energy-saving driving.

When the ignition/vehicle is powered on and the driving mode is set to Eco, Normal aor Sport, the information in the instrument pack will be displayed as " Eco ", " Comfort "or " Sport ".

Note: Switching driving modes in manual mode, the powertrain will maintain the shift logic of the manual mode.

Service Brake

Vacuum Assisted Hydraulic Brake System*

The vacuum assisted hydraulic brake system allows the driver to apply the brake more easily, and also improves the braking performance.

Note: When the engine is not started, the brake pedal will feel hard, but when the engine is started, the brake pedal will feel soft, which is the brake booster in action.

The vacuum assisted hydraulic brake system helps the driver save effort when depressing the brake pedal, and ensures a safe and quick braking, however, in daily driving, the following non-standard operations should be avoided:

- Never allow the car to freewheel with the engine turned off. Since the vacuum assisted hydraulic brake system functions with the engine started up only, braking when the car is freewheeling with the engine flameout may cause braking failure.
- In case of flameout while driving, you should depress the brake pedal to stop the vehicle as quickly as traffic safety permits. During braking, DO NOT pump the brake pedal, because it will excessively consume the vacuum assist in the braking system, thereby requiring increased pressing force, and reducing the easiness in braking.

During driving, the following matters should be noted:

- When the braking efficiency of vacuum booster decreases due to the change of atmospheric pressure from plain to plateau regions, the user needs to depress the brake pedal with greater effort than usual to gain effective braking.
- When driving through puddles or heavy rain, a water film may form on the surface of brake disc, which easily reduces the braking efficiency and extends braking distance. In this case, keep a safe distance from other vehicles and intermittently apply the brake pedal to keep the brake disc surface dry.
- If the braking efficiency decreases due to vehicle failure, please contact a local Authorised Repairer for service as soon as possible.

Integrated Braking System (IBS)*

The integrated braking system (IBS) features high degree of integration, faster braking response and higher stability due to independence of vacuum environment. Pay attention to the followings during use of the IBS :

- The IBS only functions with the power system in READY mode. NEVER allow the vehicle to freewheel with the power system turned off.
- If the power system is turned off while driving, you should firmly press the brake pedal, and stop the vehicle as quickly as traffic safely permits.
- If the IBS performance degrades due to a low battery or other reasons, you need to apply more force than usual to the brake pedal to brake effectively.

Multi-Collision Brake System(MCB)*

The MCB function will automatically apply the brakes to reduce the vehicle speed and improve the vehicle stability after a collision. It is designed to reduce the risk of a secondary collision caused by the uncontrolled movement of the vehicle after a collision.

The MCB will be activated when the following conditions are all met at the same time:

- A vehicle collision where airbags are deployed;
- The vehicle speed is less than 37 mph (60 km/h);
- The steering wheel has not been turned in excess of 180° ;
- SCS is fault free.

If the driver presses the accelerator pedal firmly after the MCB function is triggered, the system will exit the braking state.

Note: The MCB function cannot decelerate the vehicle in all cases of collision due to the fact that the collision process may cause some parts to malfunction or fail and affect the normal operation of the function.

Modes of Power*

The vehicle is equipped with a gasoline engine, a hybrid drive unit, a fuel tank and a high voltage pack.

Different drive combinations are based upon the different driving conditions.

If the vehicle is being driven using pure EV via the hybrid drive unit, the EV indicator in the instrument pack illuminates green.

If the engine has cause to start, the HEV indicator in the instrument pack will illuminate green.

Energy Regeneration*

Deceleration caused by energy regeneration is NOT a substitute for braking safely. The driver must ALWAYS be prepared to make braking manoeuvres to maintain safe driving.

When the vehicle is braking, in an overrun or coasting state, the energy regeneration function is activated, and the motor converts part of the kinetic energy of the vehicle into electric energy, which is then stored in the high-voltage battery pack.

Energy cannot be regenerated or is limited under some conditions, such as:

- N gear is selected (During driving do not coast in N gear) ;
- During torque intervention (SCS or traction control operation) ;
- High voltage battery pack is fully charged;
- High voltage battery pack temperature is too high or too low.

Energy Regeneration Level :

High

High Level: Maximum energy is regenerated, the vehicle exhibits shorter coasting distances and a strong sensation of over-run drag or motor braking.

Medium

Medium Level: Moderate energy regenerated.

Low

Low Level: Minimum energy is regenerated, the vehicle exhibits longer coasting distances and no significant sensation of over-run drag or motor braking.

The energy regeneration level can be selected in the entertainment display screen.

Note: It is recommended to choose Low or Medium levels on surfaces that have low adhesion levels (e.g. icy roads).

Safety

Seat Belt 130

Airbag Supplementary Restraint System 141

Child Restraints 153

Child Proof Locks 164

Body Stability Control System 165

Anti-lock Brake System (ABS) 166

Parking Brake 167

Auxiliary Brake system 170

*Auto Hold** 171

Hill Hold Control (HHC) 174

Active Rollover Protection (ARP) 176

*Emergency Braking Hazard Warning Lights Control (HAZ)** 177

*Pedestrian Alert Control System** 178

*Tyre Pressure Monitoring System (TPMS)** 179

Seat Belt

It is important that all seat belts are worn correctly. Always check that all passengers are wearing seat belts. DO NOT carry passengers that are unable to wear correctly positioned seat belts. Wearing seat belts incorrectly may cause serious injury or even death in the event of a collision.

Airbags can not replace seat belts. Airbags can only provide extra support when triggered, and not all traffic accident swill trigger airbags. Whether airbags are triggered or not, seat belts can reduce the risks of serious injury or death in accidents. Therefore, seat belts must be worn properly.

NEVER unfasten a seat belt whilst driving, serious injury or death may occur in the event of an accident or emergency braking.

Never fasten the driver seat belt or use a buckle replacement when the driver seat is vacant or when exiting the vehicle.

This vehicle is equipped with a seat belt warning lamp to remind you to fasten your seat belt.

During driving, seat belts must be fastened , this is because:

- You can never predict if you will be involved in a collision accident and how serious it may be.
- In many cases of collision accidents, passengers with seat belts properly fastened are well-protected, while passengers with seat belts not fastened suffer from serious injury or even death. Therefore, all passengers must wear seat belts correctly,even during short-distance journeys.

Protection Provided by Seat Belts

Note: It is of equal importance for passengers in the rear seat to fasten their seat belts correctly. Otherwise, passengers with seat belts not correctly fastened will be thrown forward in accidents, and will endanger themselves as well as the driver and other passengers.

When the vehicle is in motion, the travelling speed of the occupants is identical to that of the vehicle.

In the event of a 'head on collision' or emergency braking, the vehicle may stop, but the occupants will carry on travelling until they come into contact with a stationary object. This object may be the steering wheel, dashboard, windscreen or front seats.

A correctly fastened seat belt will eliminate this risk of injury. When the seat belt is worn correctly, it will lock automatically in collision accidents or emergency braking to reduce your speed together with the vehicle, so as to prevent the out-of-control movement which may cause serious injury to driver and passengers.

Wearing Seat Belts

Incorrectly worn seat belts could cause injury or death in the event of an accident. Seat belts are designed for one person, DO NOT share seat belts.

DO NOT wrap a seat belt around when holding a baby or child in your arms.

Remove any heavy coats or clothing when wearing a seat belt, failure to do so can affect protection provided by the seat belt.

Seat belts should not be wrapped around hard or sharp objects such as pens, spectacles or keys.

Seat belts can not function correctly when the seats are reclined excessively. DO NOT drive when the seats are excessively reclined.

The seat belts fitted to your vehicle are designed for use by normal sized adults. This part of the literature refers to adult use.All seat belts are 3 point lap-diagonal belts.

In order to maintain effective protection, the passengers must sit in the correct orientation, feet placed on the floor in front of them, with an upright body (no excessive recline) and the seat belt correctly fastened.

Fastening Seat Belts

Please follow the instructions below to fasten the seat belts correctly.

1 Adjust the seat correctly.

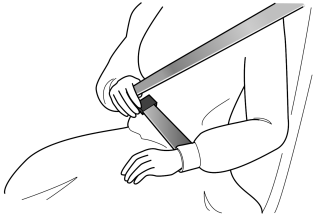

2 Hold the metal tab, pull the seat belt out steadily over the shoulder and across your chest. Ensure there are no twists on the belt.

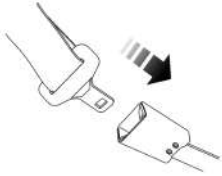

3 Insert the metal tab into the buckle until you hear a 'click', this indicates the seat belt is securely locked.

4 Remove any slackness in the belt by pulling up on the diagonal section of the belt.

5 To release the seat belt, press the red button on the buckle. The seat belt will retract automatically to its original place.

Correct Routing of the Seat Belts

Ensure the seat belt is correctly positioned on the body, NEVER cross the neck or abdomen, NEVER pass the seat belt behind the back or under the arms.

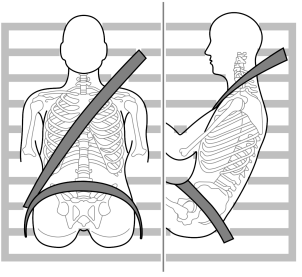

When wearing seat belts, the lap belt section should be positioned as low as possible across your hips, never across the abdomen. In the event of a collision, the lap belt can apply a force on the hips and reduce the possibility of you slipping under the lap belt. If you slip under the lap belt, the belt will apply force on your abdomen, which may cause serious or fatal injuries. The diagonal section of the belt should cross the middle of the shoulder and the chest. In the event of emergency braking or collision, the diagonal section of the belt will be locked.

To ensure that the seat belts always provide maximum protection, ensure the belt is flat, not loose and contacts the body.

Seat Belts Use during Pregnancy

Wearing correctly positioned seat belts will provide protection for both mother and unborn child in the event of a collision or emergency braking. The diagonal section of the seat belt should pass across the chest as normal, the lap section of the belt should pass below the belly, low and snug on the hip bones. NEVER position the belt on or above the belly. Please consult your physician for further details.

Seat Belts and Disabilities

It is a legal requirement that all occupants wear seat belts, this include people with disabilities.

Depending upon the disability, consult your physician for further details.

Children and Seat Belts

Only recommended child restraints suitable for the age, height and weight of the child should be used.

For safety reasons, children must travel in a child restraint device fixed to the rear seat.

Infants

Only recommended child restraints suitable for the age, height and weight of the child should be used.

NEVER carry a child or infant with your arms during driving. When collision accidents occur, the weight of the child will produce so great of a force that you will not be able to hold on to the child. The child will be thrown forward and suffer serious injury oreven death.

The seat belts fitted to your vehicle are designed for adults, they are not suitable for children. In the event of an accident or collision the children are not secure, it could cause death or serious injury.

Infants MUST use a suitable child restraint device. Please consult the child seat manufacturer's guidelines when selecting the correct seat. Follow the manufacturer's instructions on installation. Please refer to "Child Restraints" in this chapter for more details.

Older Children

NEVER share a seat belt amongst children. In the event of an accident or collision, the children are not secure. It could cause death or serious injury.

As children grow and become older/larger it will get to the stage when they no longer require child seat restraints, at this point they will require use of the vehicle standard seat belt. Please ensure the seat belt is correctly positioned on the body of the child.

When fastening a seat belt for a child always check it for correct positioning. Adjust the height of seat belt to ensure

the shoulder belt is kept away from the child's face and neck. Position the lap belt across the hips as lowas possible, and tighten adequately. Correct positioning means that the seat belts can pass the applied force to the strongest part of child's body in accidents.

If the shoulder belt is too close to child's face or neck, it may be necessary to use a child booster cushion (always ensure that it meets any relevant laws or standards.

Seat Belt Pre-tensioners

The seat belt pre-tensioners will only be activated once and then MUST BE REPLACED. Failure to replace the pre-tensioners will reduce the efficiency of the vehicle's restraint system.

If the pre-tensioners have been activated, the seat belts will still function as restraints, and must be worn in the event that the vehicle remains in a drivable condition. The seatbelt pre-tensioners should be replaced at the earliest opportunity by an MG Authorised Repairer.

The vehicle is fitted with seat belt pre-tensioners. These are designed to retract the seat belts and work in conjunction with the airbags in the event of a severe collision. They are designed to retract the seat belt and 'secure' the occupant in the seat.

The airbag warning light on the instrument pack will alert the driver to any malfunction of the seat belt pre tensioners.(see ‘Warning Lights and Indicators' in the ‘Instruments and Controls’ chapter).

The seat belt pre-tensioners can only be activated once. After activation they must be replaced. This may also involve replacement of other SRS components. Please refer to 'Replacing Airbag System Parts'.

IMPORTANT
• Seat belt pre-tensioners will not be activated by minor impacts. • The removal or replacement of a pre-tensioner must be carried out by the technicians trained by the manufacturer. • 10 years from the initial date of registration (or installation date of a replacement seat belt pre tensioner), some components will need to be replaced. The appropriate page of the Service Records must be signed and stamped once the work has been completed.

Seat Belt Checks, Maintenance and Replacement

Seat Belt Checks

Split, worn or frayed seat belts may not function correctly in the event of a collision, if there are any signs of damage, replace the belt immediately.

Always ensure the red release button on the seat belt buckle is pointing upwards ensure easy release in the event of an emergency.

Please follow the instructions below to check the seat belt warning light, seat belt, metal tab, buckle, retractor and fixing device regularly:

- Insert the seat belt metal tab into the corresponding buckle and pull seat belt webbing close to the buckle quickly to check that the belt clasp locks.
- Hold the metal tab and pull the seat belt forward quickly to check that the seat belt reel locks automatically, preventing the webbing from extending.
- Fully extract the seat belt and visibly examine for twists, fraying, splits or worn areas.

- Fully extract the seat belt and allow to return slowly to ensure continual and complete smooth operation.
- Visibly examine the seat belt for missing or broken components or components that may affect the normal operation.
- Ensure the seat belt warning system is fully functional.

If the seat belt fails any of the above tests or inspections, contact an MG Authorised Repairer immediately for repairs.

Seat Belt Maintenance

DO NOT attempt to remove, install, modify, disassemble or dispose of the seat belts. Have any necessary repairs carried out by an MG Authorised Repairer. Inappropriate handling may lead to incorrect operation.

Ensure no foreign or sharp objects become lodged in the seat belt mechanisms. DO NOT allow liquids to contaminate the seat belt buckle, this could affect the buckle engagement.

Seat belts should only be cleaned with warm soapy water. Never use any solvent to clean the seat belt. Never attempt to bleach or dye the seat belt, otherwise the strength of the seat belt will be severely weakened. After cleaning, wipe with a cloth and allow to dry. Never allow the seat belt to fully retract before it is completely dry. Keep seat belts clean and dry.

If there are contaminants accumulated in the retractor, the retraction of seat belt will be slow. Please use a clean and dry cloth to remove any contaminants.

Seat Belt Replacement

Collision accidents may damage the seat belt system. The seat belt system may not be able to protect users after damage, which may result in serious injury or even death. After an accident, seat belts should be checked and replaced as needed immediately.

Seat belts should not require change after minor collisions, however, some other parts of the seat belt system may require attention. Please consult an MG Authorised Repairer for advice.

Airbag Supplementary Restraint System

Overview

The airbag SRS provides ADDITIONAL protection in a severe frontal impact only. It does not replace the need, or requirement to wear a seat belt.

The airbags together with the seat belts provide optimum protection for adults, but it is not the case for infants. The seat belt and airbag systems in the vehicle are not designed for protecting infants. The protection required by infants should be provided by child restraints.

In the corresponding position where airbags are fitted, there is a warning sign stating " AIRBAG ". Generally, SRS contains the following components (the components are not completely the same according to different model and configuration):

- Frontal airbags (fitted in the centre part of the steering wheel and the instrument panel above the glove box respectively)
- Side airbags (fitted in the outer seatback cushion of the two front seats)*
- Side curtain airbags (fitted in the roof interior trim)*

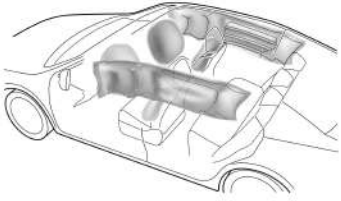

Airbag Warning Lamp

The airbag warning light is located in the instrument pack. If this lamp does not extinguish or illuminates during driving, it indicates that there is a failure

in the SRS or seat belt. Please seek an MG Authorised Repairer at the earliest opportunity. An SRS or seat belt fault may mean the components may not be deployed in the event of an accident.

Airbag Deployment

Front seat passengers should not place feet, knees or any other part of the body in contact with, or in close proximity to a front airbag.

To minimise the risk of accidental injury from inflating airbags, seat belts should be worn correctly at all times. In addition, both driver and front passenger should adjust their seat to provide sufficient distance from the frontal airbags, so as to avoid severe or even fatal injury when the airbag is deployed. If side airbags and side head impact protection airbags are fitted, both driver and front seat passenger should be seated to maintain sufficient distance from the upper part of the body to the sides of the vehicle, this will ensure maximum protection when the side airbags/side head impact protection airbags are deployed.

An inflating airbag can cause facial abrasions and other injuries if the occupant is too close to the airbag at the time of its deployment.

When airbags are deployed, children without proper protection may suffer from serious injury or even death. DO NOT carry children in the arms or on the knees during traveling. Children should wear seat belts suitable to age. DO NOT lean out of windows.

After deployment, the relative airbag components will become very hot, such as the steering wheel, instrument panel and both sides of the roof rails . DO NOT touch any airbag related components after airbag deployment, it may cause burns or serious injury.

DO NOT knock or strike the position where any airbag related parts are located, so as to avoid accidental airbag deployment which may cause serious injury or even death.

DO NOT affix or place any objects on, or adjacent to the airbags. This may affect the airbag passage or create projectiles that may cause injury or serious harm in the event of airbag deployment

In the event of a collision, the airbag control unit monitors the rate of deceleration or acceleration induced by the collision, to determine whether the airbags should be deployed. Airbag deployment is virtually instantaneous and occurs with considerable force, accompanied by a loud noise.

In the event of a severe frontal collision, a completely deployed airbag, along with a correctly worn seat belt, can limit the movement of the driver and front passenger, reducing the risk of head and chest injuries. For vehicles fitted with side airbags and side curtain airbags, when the vehicle encounters a serious side collision, the completely

deployed airbag will form a cushion of air between the occupant and the vehicle side to reduce the risk of body side injuries.

Provided the front seat occupants are correctly seated and with seat belts properly worn, the airbags will provide additional protection to the chest and facial areas in the event of the car receiving a severe frontal impact.

IMPORTANT

- Airbags cannot protect lower body parts of passengers.
- Airbags are not designed for rear collision, minor frontal collision or if the vehicle rolls over, nor will it operate as a result of heavy braking.
- Deployment and deflation of the airbags takes place very quickly and will not protect against the effects of a secondary impact if it occurs.
- When an airbag inflates, a fine powder is released. This is not an indication of a malfunction. However, the powder may cause irritation to the skin and should be thoroughly flushed from the eyes and any cuts or abrasions of the skin. If your skin, eyes, nose or throat etc feels uncomfortable, please consult a doctor.
- After inflation, front and side airbags deflate immediately. This provides a gradual cushioning effect for the occupant and also ensures that the driver's forward vision is not obscured.

Frontal Airbags

NEVER use a rearward facing child restraint on a seat protected by an ACTIVE AIRBAG in front of it, DEATH or SERIOUS INJURY to the CHILD can occur. Refer to 'Disabling the Passenger Airbag'.

Front seat passengers should not place feet, knees or any other part of the body in contact with, or in close proximity to a front airbag.

In extreme cases driving on very uneven surfaces may cause airbag deployment. Please take extra care when driving on uneven roads.

For some models, the passenger side airbag can be turned off through the switch on the entertainment display screen.

Airbags are designed to deploy during serious impacts, the following conditions may cause airbag deployment.

- A frontal collision with unmovable or non deformable solid objects at a high speed.

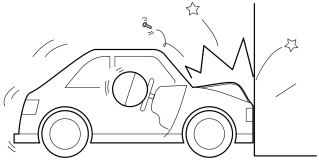

- Conditions that can cause serious chassis damage, such as a collision with kerbstones, road edges, deep ravines or holes.

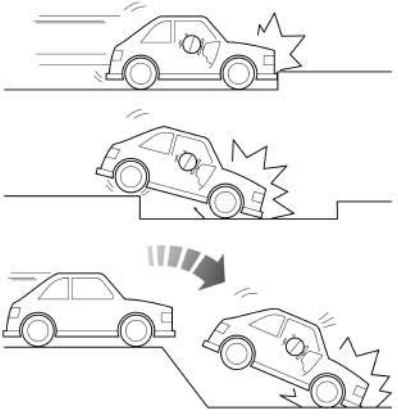

Side Airbags and Side Curtain Airbags*

The structure and material of the seat is critical to the correct operation of side airbags. Therefore, please DO NOT fit seat covers which may affect side airbag deployment.

In the event of a serious side impact, the relevant side airbag will deploy from the seat cover, and the side curtain airbags will deploy from the roof interior trim (only the affected side). The other side will not deploy. The conditions described below (or similar) may cause side airbag and side curtain airbag deployment.

- One side of the vehicle collides with high-speed ordinary passenger car.

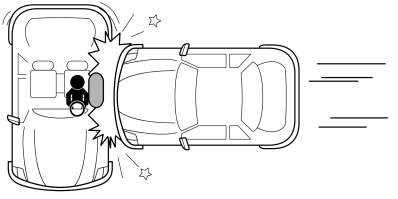

Conditions in Which Airbags Will Not Deploy

The deployment of airbags does not depend on the vehicle speed, but on the object that the vehicle hits, angle of impact and the rate at which the car changes speed as a result of a collision. When the impact force of collision is absorbed or dispersed to vehicle body, airbags may not deploy; however, airbags may sometimes deploy according to impact condition. Therefore, the deployment of airbags shall not be judged based on the severity of vehicle damage.

Frontal Airbags

Under certain conditions the front airbags may not be deployed. Some examples are listed:

- The impact point is not central to the front of the vehicle.
- The impact is with a solid utility pole or traffic sign post.

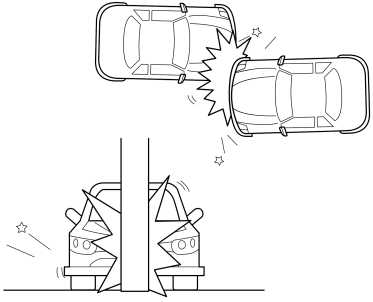

- The impact area is high (collision with the tailgate of a truck).
- Frontal collision at an angle with guardrails.

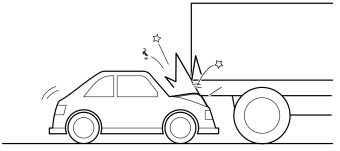

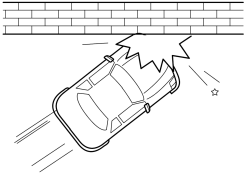

- Impacts to the rear or side of the vehicle.
- The vehicle rolling over.

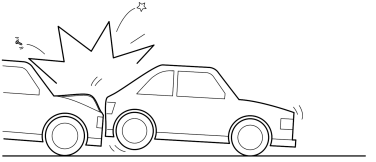

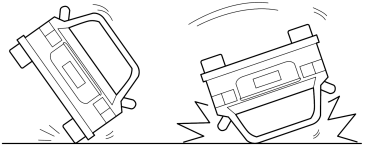

Side Airbags and Side Curtain Airbags*

Under certain conditions the seat side and side head airbags may not be deployed. Some examples are listed:

- Side impacts at certain angles.
- Light side impacts such as with a motorcycle.

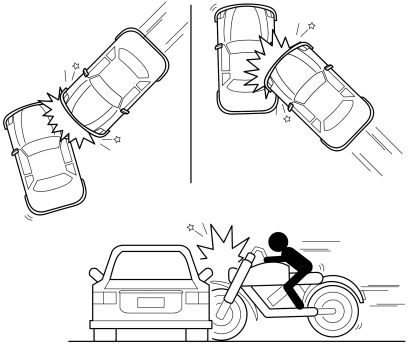

- Impacts that are not central to the side of the vehicle, either too far toward the front compartment or the loadspace.
- Side impact on loadspace area.
- The vehicle rolling over.

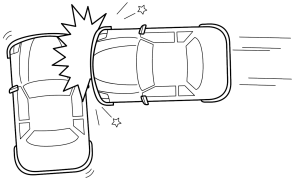

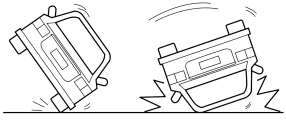

- Frontal collision at an angle with guardrails.
- The angled impact is not of sufficient force (the impactis with an object that is not solid, such as a lamp post or central barriers)

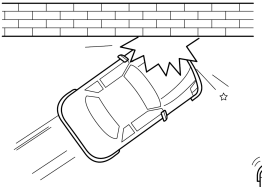

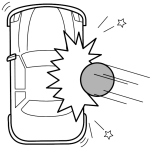

- The impact is not of sufficient force (with another vehicle, stationary or moving).
- The impact is from the rear of the vehicle.

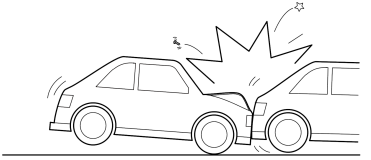

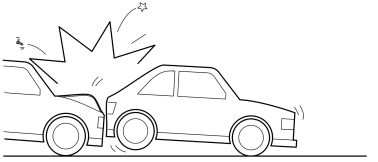

Service and Replacement of Airbags

Service of SRS components

DO NOT install or modify the airbag. Any changes to the vehicle structure or airbag system wiring harness are strictly prohibited.

Changes to vehicle structure is prohibited. This may affect the normal operation of the SRS.

DO NOT allow these areas to be flooded with liquid and DO NOT use petrol, detergent, furniture cream or polishes.

If water contaminates or enters the airbag system, it may cause damage and affect deployment. In this case, even if the collision does not occur, the airbag may accidentally deploy. Immediately shut down the power system and disconnect the battery cable; do not try to start the power system. In this case contact an MG Authorised Repairer immediately.

If the airbag warning lamp fails to illuminate or remains on, or there is any damage in the front or side of the vehicle and the cover of airbag module has any sign of damage, contact an MG Authorised Repairer immediately.

IMPORTANT
• The removal or replacement of an airbag module should be carried out by an MG Authorised Repairer. • After 10 years from the initial date of registration(or installation date of a replacement airbag), some components will need to be replaced by an MG Authorised Repairer. The appropriate page of the Service Portfolio must be signed and stamped once the work has been completed.

Replacing Airbag System Parts

Even if the airbag does not deploy, collisions may cause damage to SRS in the vehicle. Airbags may not function properly after damage, and can not protect you and other passengers when a second collision occurs, which may cause serious injury or even death. To ensure that SRS can function properly after collision, please go to an MG Authorised Repairer to check airbags and repair as necessary.

Airbags are designed for using once only. Once the airbagis deployed, you must replace SRS parts. Please go to an MG Authorised Repairer for replacement.

Disposal of Airbags

When your vehicle is sold, ensure that the new owner knows the vehicle is equipped with airbags, and is aware of the replacement date of SRS.

If the vehicle is scrapped, the undeployed airbags may have potential risks, therefore, before the disposal, they must be deployed safely in a certain environment by a professional agency or an MG Authorised Repairer.

Child Restraints

Important Safety Instructions about Using Child Restraints

Children under the age of 12 years are recommended to be seated in the rear seats. Compared with adults, children'smuscles and bones do not fully develop, so you need to use dedicated child restraints to protect children. Use child restraints in rear seats to protect children based on thechild's age, height and weight.

It is recommended that a child restraint system thatcomplies with UN ECE-R44 and ECE-R129 are fitted in this vehicle. When choosing a child restraint, check relevant marks or instructions about the weight range applicablefor the child restraint and the usage message on it.

When installing and using a child restraint, it is necessary to comply with relevant laws and regulations, the instructions supplied by the child restraint manufacturer, and theinstructions on children's safety in this manual.

The correct use of child restraints will greatly reduce children's injury risk in accidents or relieve their injuryseverity, and please pay attention to the followings whenyou use child restraints:

- It is recommended that children shorter than 1.5 metres (or under 12 years of age) should use the appropriate child restraint, and cannot use regular seatbelt, otherwise it may cause the abdomen and neck injuries.
- Never let your children ride in unprotected case. Care should not be neglected because of children sitting onthe child restraint.
- Only one child may be carried in any one restraint.
- DO NOT put the child on the lap or in arms when sittingin any seat.
- Proper child restraint can provide protection for your children.
- Relevant front seat may need to be adjusted frontward for installing the rear-facing child restraint to the rearseats.
- The position of seat head restraints may need to be adjusted for installing the forward facing child restraint to the rear seats.
- Never let your child stand or kneel on the seat during driving, otherwise, your child may be tossed and thus

lead to injury to their own and other people or even death when an accident occurs.

- If a child's body leans forward or the posture is not correct during driving, then the accident will increase the risk of injury.
- The method of using seat belts have a great influenceon the maximum protection offered by the seat belt,you must comply with the child restraint manufacturer's instructions on proper use of seat belts. If seat belts are not properly fastened, even a minor traffic accident maylead to injury.
- Child restraints that are not fitted correctly may move and injure other occupants in the event of an accidentor emergency braking. Therefore, even if there is no infant or child in the child restraint, it should be fitted properly and securely in the vehicle.

Warnings and Instructions on Use of Child Restraint on Front Passenger Seat

NEVER use a rearward facing child restraint on the front passenger seat with the front passenger airbag activated, otherwise DEATH or SERIOUS INJURY to the CHILD may occur.

Use one child restraint per child.

In cases where there is a need to install a rear facing child restraint on the front passenger seat, use the entertainment display to deactivate the front passenger airbag function, or severe injury or even death can occur.

Once the child restraint is removed from the front passenger seat, use the entertainment display to reactivate the front passenger airbag.

When installing a child restraint on the front passenger seat, move the front passenger seat as far rearward as possible.

Please carefully read the safe driving warning label on the sun visor. Always install the child restraint in the rear seat for security reasons. And above warning shall be noted in a special case when the child restraint must be used on front passenger seat.

When child restraint must be used on front passenger seat, please follow the instruction below.

IMPORTANT
• Move the front passenger seat as far back and as high as it can be adjusted to creat the largest possible distance between the child seat and the front passenger front airbag. • Move the backrest to the upright position. • Set the seat belt heights so that the seat belt routing follows a natural path adapted to the child seat without excessive deviations. For rear-facing child seats, use the lowest position of the belt height adjuster. • Only use child seats that have been approved by the child seat manufacturer for use on a front passenger seat with front and side airbag.

Important Instructions on Children's Safety and Side Airbags

Children should not be allowed in areas where side airbags may be deployed, there is a risk of serious injury.

Only recommended child restraints suitable for the age, height and weight of the child should be used and firmly fixed in the vehicle.

DO NOT place any items in areas where side airbags may be deployed, there is a risk of serious injury.

In the event of a side collision, the side airbags can provide better protection for the passenger. However, when the airbag is triggered, a very strong expansion force is generated, if the passenger's seating position is not correct, the airbags or items in the side airbag deployment area may cause injury.

Therefore, the correct child restraint must be used to secure the child correctly in the rear seat whilst ensuring the child's seating position is correct and there is enough space between the child and the side airbag deployment area for the airbag to deploy without any hindrance in a traffic accident, this will provide the best protection.

Fixing Child Restraints

Secured Using Lap and Shoulder Belts

Please DO NOT put the rearward facing child restraint on the front passenger seat with the front passenger airbag activated, this may cause serious injury or even death.

The child restraint can be secured to the rear seat by the lap and shoulder belts.

Secured with ISOFIX/i-Size Device

WARNING

The ISOFIX/i-Size anchorages in the rear seat are designed for use with ISOFIX/i-Size systems only.

WARNING

Child restraint anchorages are designed to withstand only those loads imposed by correctly fitted child restraints. Under no circumstances are they to be used for adult seat belts, harnesses, or for attaching other items or equipment to the vehicle.

The 2nd-row seats of this vehicle on both sides are provided with ISOFIX/i-Size interface (as indicated by the arrow in the figure below) connected to the ISOFIX/i-Size child restraint. When installing and removing any child restraint system, always follow the manufacturer's instructions.

- Insert the tapered plastic sleeve into ISOFIX/i-Size anchor between the seat cushion and backrest.
- Push the ISOFIX/i-Size attachment of the child restraint into the tapered plastic sleeve already fitted, secure it in the ISOFIX/i-Size anchor.

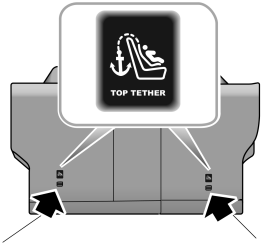

- The Top-tether (as arrowed in the figure above) for auxiliary fixation of the child restraint is provided at theback of the rear seat backrest. The single top-tetherof the child restraint must pass through space between the rods of the rear seat headrest, and dual tether mustpass from both sides of the rear seat headrest.

  Note: When using seat mounted, universally approved child restraint systems, the top tether must be used.

- After the installation, push or shake the child restraint with moderate force to confirm it is properly secured.

Child Restraint Groups and Installation Position

Only approved child restraints suitable for children are allowed. Children taller than 1.5 m may directly use the seat belts in the vehicle. Child restraints shall comply with relevant regulations or standards, such as EU regulations ECE-R44 and ECE-R129 .

Recommended Child Restraint Systems

ECE-R129 classification is based on a child height

Child Stature	Recommended
40~83cm	Maxi Cosi Pebble 360
76~105cm	Britax Römer TriFix[2]i-Size
100~150cm	Britax Kidfix i-Size[1]
**** For the best protection, it is recommended to use this child restraint system with the included backrest and be sure to attach the seatbelt through Secure Guard and XP-Pad. The side impact extensions should be used and extended to the outermost when in use.***	

ECE-R44 classification is based on a child weight

Weight Group	Child Weight	Recommended
Group III	22 to 36kg	Graco Booster Basic

Suitable Seats for Attaching Child Restraint Systems

	Seating Position					
Seating Position	**Front Drive**	**Front Passenger[1]**		**2nd Row Left**	**2nd Row Centre**	**2nd Row Right**
		With Front Passenger Airbag Activated	**With Front Passenger Airbag Deactivated***			
Seating position suitable for univeral belted(yes/no)	No	Yes Forward facing only	Yes	Yes	Yes	Yes
I-Size seating position(yes/no)	No	No	No	Yes	No	Yes
Seating position suitable for lateral fixture(L1/L2)	No	No	No	No	No	No
Largest suitable rearward facing fixture (R1/R2x/R2/R3)	No	No	No	R1/R2x/R2/R3	No	R1/R2x/R2/R3

	Seating Position					
Seating Position	Front Drive	Front Passenger[1]		2nd Row Left	2nd Row Centre	2nd Row Right
		With Front Passenger Airbag Activated	With Front Passenger Airbag Deactivated*			
Largest suitable forward facinig fixture(F1/F2x/F2/F3)	No	No	No	F1/F2x/F2/F3	No	F1/F2x/F2/F3

	Seating Position					
Seating Position	Front Drive	Front Passenger[1]		2nd Row Left	2nd Row Centre	2nd Row Right
		With Front Passenger Airbag Activated	With Front Passenger Airbag Deactivated*			
Largest suitable booster fixture(B2/B3)	No	(B2/B3)[2]	(B2/B3)[2]	B2/B3	(B2/B3)[2]	B2/B3

Note:

- [1]When installing a CRS on the front passenger seat, adjust the front passenger seat as high as possible to securely install the CRS.
- [2]Only applicable for installation with seat belt.
- During the installation of the CRS, the backrest angle of seats should be adjusted reasonably to ensure that the CRS remains stable.
- During the installation of the CRS, the height of the headrest should be adjusted reasonably or the headrest should be removed to avoid interference with the CRS. Do not remove the head restraint when using a booster cushion with no backrest.Ensureall removed head restraints are stowed safely. Refit the head restraint oncethe CRS has been removed.

Child Proof Locks

NEVER leave children unsupervised in the car.

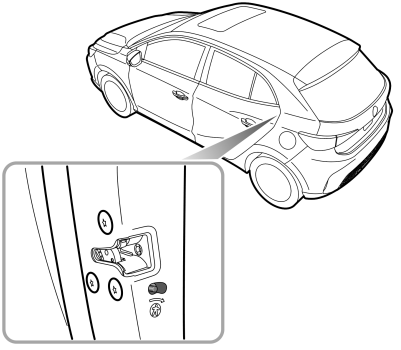

Steps for enabling or disabling the child proof locks are as follows:

- Open the relevant rear door, move the lever in the direction of the arrow to engage the childproof lock.
- Move the lever to the unlock position in the reverse direction of the arrow to disable the child proof lock.

With the child proof lock engaged, the rear door on the corresponding side cannot be opened from inside the car, but can be opened from outside the car.

Body Stability Control System

Body Stability Control System

The body stability control system includes Dynamic Stability Control System (SCS) and Traction Control System (TCS)

SCS is designed to assist the driver in control of driving direction. When SCS detects that the vehicle is not moving in the intended direction, it will intervene by applying brake force to selected wheels or through the drive system to prevent sliding and stabilise the driving direction by correcting the under-steering or over-steering.

TCS contributes to maintaining the control to the vehicle by improving the vehicle's traction trafficability and driving stability. TCS monitors the driving speed of each wheel individually. If spin is detected on one wheel, the system will automatically brake that wheel, transferring torque to the opposite, non-spinning wheel. If both wheels are spinning, the output torque of the drive system will be reduced in order to regulate wheel rotation until traction is regained.

SCS and TCS are automatically switched on when the Start switch is placed in ON/READY position. They can be switched off by using the switch located on the entertainment display.

Note: Disabling SCS and TCS will not affect the operation of ABS . Always disable SCS and TCS when driving with snow chains fitted.

Note: SCS and TCS can't be turned off if ACC is actived.

Reinstating the body stability control system

After a battery disconnection/reconnection, the body stability control warning lamps will illuminate, and the dynamic stability control/traction control system will not work correctly.

In this case, the electric power steering (EPS) will require initialisation, i.e., move the steering wheel from lock to lock. The electric power steering (EPS) warning lamp and the body stability control warning lamps extinguish, the dynamic stability control/traction control system will be reinstated.

Anti-lock Brake System (ABS)

When travelling at high speed or there is a danger of aquaplaning, i.e. where a layerof water prevents adequate contact between the tyres and the road surface, ABS cannot overcome the physical limitations of stopping the car in a short distance. In these cases, it is the responsibility of the driver to maintain a safe distance from other vehicles.

DO NOT pump the brake pedal at any time, this will interrupt the operation of ABS and may increase the braking distance.

The ABS is mainly used to automatically adjust the braking force of each brake when braking to prevent the wheels from being locked, thus avoiding dangerous situations such as loss of direction or side slip during emergency braking.

This system enables the driver to maintain control over the steering in case of emergency braking, keeping the vehicle stable, and improving safety.

Under normal braking conditions, ABS will not be activated. However, if the braking force exceeds the adhesion between the tyres and the road surface, causing the wheels to lock, the ABS will automatically come into operation. This will be recognisable by a rapid pulsation felt through the brake pedal.

If an emergency situation occurs, the driver should apply full braking effort to trigger the ABS even when the road surface is slippery.

Note: On soft surfaces such as powdery snow, sand or gravel, vehicles equipped with ABS may have a braking distance greater than those without ABS. This is because the natural action of locked wheels on soft surfaces is to build up a wedge of material in front of (or to the side of, if steering) the tyre contact patch. This effect assists the car to stop when braking or to change direction when steering.

IMPORTANT
• Although ABS can greatly improve driving safety, the real safety still depends on the driver's own standard driving behavior. • The normal braking system remains fully operational and is not affected by partial or full loss of anti-lock braking system (ABS).

Parking Brake

Parking Brake System - Electronic Parking Brake (EPB)*

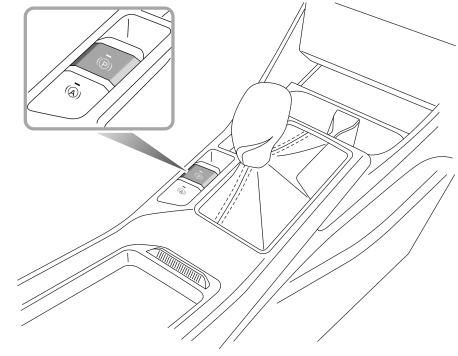

In the event of EPB malfunction where EPB release is not possible, please consult an MG Authorised Repairer in order to carry out an emergency manual release of the parking brake.

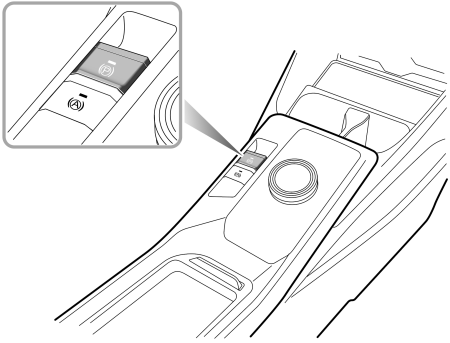

The EPB system can be operated using the following methods:

- Manual operation: Pull up the EPB switch to turn on the EPB system after the vehicle is parked safely. Place the Start switch in ON/RUNNING/READY position, depress the brake pedal, and press the EPB switch to turn off the EPB system.
- Automatic operation: Shift into P gear to turn on the EPB system after the vehicle is parked safely. Park the

vehicle safely on a flat road or a road with a small slope, place the Start switch in RUNNING/READY position, depress the brake pedal, and shift into either gear other than P gear to turn off the EPB system.

If the indicators Ⓟ in the EPB switch and in the instrument pack illuminate, it indicates that the EPB system has been turned on. If the indicators Ⓟ in the EPB switch and in the instrument pack extinguish, it indicates that the EPB system has been applied.

Note: When leaving the vehicle, the EPB must be applied.

Note: An audible motor noise may be heard when applying or releasing the EPB.

Note: On a steep slope, shifting out of the P gear will not turn off the EPB system. In this case, please turn off the EPB system manually, or use the HHC function of EPB .

The electronic parking system cannot be activated or deactivated when the vehicle battery is discharged. If this is the case, apply the emergency starting power system with a jumper cable, please refer to the "Jump Start" section in the "Emergency"section.

Start Assist

If the driver's seat belt is fastened, the power system is running, D or R gear is selected and the accelerator pedal is pressed to pull away, the EPB system will automatically release.

Emergency Braking Function

Inappropriate use of EPB can lead to accidents and injuries. DO NOT apply the EPB for vehicle braking whilst moving, unless in an emergency.

During emergency braking using the EPB, DO NOT switch off the ignition/power system, this could result in serious injury.

In the event of normal brake failure during driving, emergency braking can be initiated by pulling and holding the EPB switch upward. An audible warning will sound during emergency braking. The braking process will be canceled by releasing the EPB switch.

Parking Brake System - Manual Parking Brake*

Do not drive with the parking brake applied, or apply the parking brake whilst the vehicle is in motion. This could result in loss of control, prevent the ABS from functioning correctly, and may even cause damage to the rear brakes.

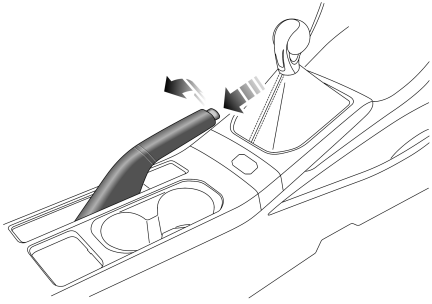

The parking brake operates on the rear wheels only. To apply the parking brake, pull the lever upward. Whilst parked, ensure the parking brake lever stays in applied state.

To release, pull the lever up slightly, then press the button at the end of parking brake lever and fully lower the lever.

When parking on a steep slope, do not rely on the parking brake alone to hold the vehicle.

Auxiliary Brake system

The auxiliary brake system consists of Electronic Brake Force Distribution System (EBD) and Electronic Brake Assistance System (EBA).

The EBD automatically distributes the braking force between the front and rear wheels, so that the vehicle can have optimum braking performance under different load conditions.

The EBA increases the braking force applied on each wheel during emergency braking to assist the driver in quickly triggering ABS , thereby reducing the braking distance.

Auto Hold*

The auto hold function cannot guarantee the stability of the vehicle when starting off or braking on hills especially on slippery or icy surfaces.

When auto hold stops the vehicle, for reasons such as engine shut-down, releasing the seat belt or pressing the auto hold switch, the electronic parking brake is applied. It cannot be guaranteed that the vehicle will be stabilised in all cases. For example, the rear wheels are on a slippery road surface, or the vehicle incline is too great (larger than 20%). Please make sure that the vehicle is safely stabilised prior to exiting.

DO NOT leave the vehicle when the engine is operating and the auto hold is active.

Auto hold cannot guarantee the electronic parking brake operation in all cases where the ignition system is shut down. Please ensure the electronic parking brake is applied and the vehicle is stabilised prior to exiting the vehicle.

The auto hold function should be switched off during the use of automatic car washes, the electronic parking brake may suddenly apply and cause vehicle damage.

If the vehicle is required to stop frequently for long periods while driving (such as waiting at the traffic lights, stopping on a slope or in urban stop-and-go conditions), the Auto Hold function can assist you in stabilising the vehicle, allowing you to remove your foot from the brake pedal when the vehicle is stationary and the Auto Hold is active.

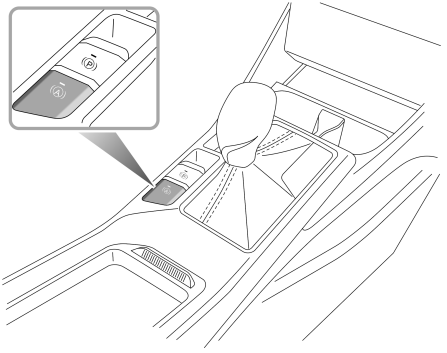

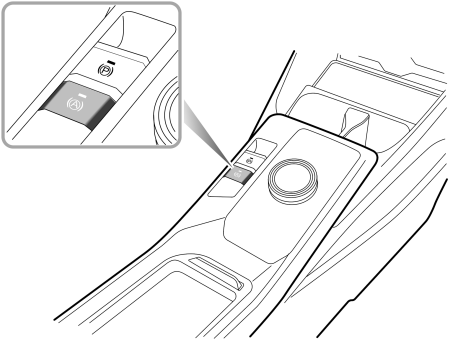

Auto Hold has 3 states as follows:

1 Standby:

With the driver's seat belt fastened, the door closed and the power system running, press the Auto Hold switch to switch the function from Off to Standby state. The indicator of Auto Hold Switch illuminates.

2 Operating:

When the vehicle is moving forward, press the brake pedal to a certain depth. After the vehicle has come

to a complete halt, the Auto Hold function is switched from Standby to Parking state. In this state, the green indicator Ⓟ on the instrument panel illuminates.

When the Auto Hold is in the Parking state, engaging D gear and pressing the accelerator pedal will automatically release the Auto Hold function taking into consideration the angle of the slope.

The Auto Hold will release from the Parking state if R gear is selected.

3 OFF:

Press Auto Hold switch again to disable the function.

The Auto Hold will exit the parking state under some circumstances such as releasing the seat belt, turning off the power system, remaining static for a length of time or pressing the Auto Hold switch. At this time, the EPB will be applied.

Note: With the brake pedal pressed, operating the switch to turn the auto hold off, the system will NOT apply the parking brake.

Note: When the vehicle is in P gear, the auto hold function will not be engaged.

Hill Hold Control (HHC)

It is impossible for HHC to keep the vehicle in a standstill state under all circumstances (e.g. slippery ground, snow and ice, etc.) when going uphill, and the driver must constantly pay attention to the vehicle condition.

HHC is not a substitute for parking brake application when carrying out a hill start. DO NOT exit the vehicle with only HHC applied, it may lead to a serious accident when HHC releases.

During hill start in stop-and-go road condition, please apply the brake pedal deeply for several seconds before each start.

The car may roll if 'pull-away' is not achieved immediately after releasing the brake pedal.

Always ensure the brake pedal is pressed or electronic parking brake applied until drive is taken up.

Firm application of the brake pedal when stopping is required by HHC to generate sufficient brake pressure to maintain hold.

HHC assists the driver by "holding" the vehicle during hill starts. If the driver releases the brake pedal, the HHC will hold the vehicle stationary for a short time.

The HHC will be activated when the following conditions are met simultaneously:

- The driver's seat belt has been fastened and the driver's door is closed.
- The vehicle is stopped on a slope longer than a preset period.
- SCS is fault free.
- EPB / manual parking brake is fault free and released.
- The power systeme is running.
- In D or R gear.
- Sufficient force has been applied on the brake pedal during braking.

Note: The HHC can also work when the vehicle is reversing uphill.

Active Rollover Protection (ARP)

Active Rollover Protection (ARP)

The ARP system is a driver aid to assist the stability of the vehicle. It is not a guarantee that the vehicle will not roll over.

When the vehicle is at risk of rollover during dynamic driving (such as lane change) or steady driving (such as loop driving), the ARP will automatically brake the outside wheels to cause the vehicle to understeer and prevent rollover.

Note: With ARP in use, the vehicle under-steers and it is normal if it fails to steer in accordance to driver expectations.

Note: The ARP system cannot overcome the laws of physics. It is a driver aid to assist the stability of the vehicle and under extreme conditions. It is not a guarantee that the car will not roll over.

Emergency Braking Hazard Warning Lights Control (HAZ)*

If the driver makes an emergency braking manoeuvre and certain conditions are met while driving, the brake lamps will automatically flash to alert the drivers behind, thereby reducing the risk of rear-end collision accidents.

Note: If the hazard warning lamps are being operated manually, this suspends the HAZ function.

When the emergency braking manoeuvre is exited, the HAZ function will be switched off after a few seconds.

Note: As the car speed drops to below 6 mph (10 km/h) and the system no longer flashes the brake lamps, the hazard warning lamps will illuminate automatically. Short press the hazard warning lamp switch or increase your speed to above 12 mph (20 km/h) for 5 s to switch off the hazard warning lamps.

Pedestrian Alert Control System*

In order to improve the safety, your car is fitted with a Pedestrian Alert System. When the vehicle is travelling at a low speed, on electrical power, the system controls a speaker that sounds to remind pedestrians in the vicinity of your presence.

Strategies of sounding warnings

The speaker sounds when all of the following conditions are met:

1 The vehicle is READY;

2 The pedestrian alert system is fault free;

3 During acceleration, the vehicle speed is less than 19 mph (30 km/h) during deceleration, the vehicle speed is less than or equal to 15 mph (25 km/h).

Tyre Pressure Monitoring System (TPMS)*

TPMS can not replace routine maintenance and checks of the tyre condition and pressure.

Using equipment that transmits on frequencies similar to that of the TPMS may interfere with the operation of the Tyre Pressure Monitoring System, this may illuminate a warning or register a temporary fault.

TPMS uses pressure sensors built into tyre valves to continuously monitor pressure and transmit data to the ECU inside the vehicle using RF signals. If it deduces that the pressure of that tyre has fallen below the predefined limit of the system, the warning light in the instrument pack will illuminate (always yellow). For more information, please refer to 'Instrument Pack' in 'Instruments and Controls' section. TPMS can remind you of low tyre pressure, but it can not replace normal tyre maintenance. For tyre maintenance, please refer to 'Tyres' in 'Maintenance' chapter.

Note: TPMS only gives the driver a warning when the tyre pressure is low, and it will not inflate the tyre.

If the TPMS malfunction indicator lamp illuminates, and the warning message such as " XX Tyre Pressure Insufficient" or " XX Tyre Pressure Low" is displayed, it is advised that you should stop the vehicle as soon as possible, check the tyre pressure and inflate the tyre to the standard pressure value. The tyre pressure label attached to the B pillar indicates the standard pressure value required by your vehicle tyres when they are cold.

Driving with under-inflated tyres may overheat the tyres and cause tyre faults. Over or under-inflated tyres wear out more rapidly and also have a detrimental effect on the car's handling characteristics. Under-inflated tyres increase the rolling resistance of the car which, in turn, increases power consumption.

TPMS Self-learning

When replacing a TPMS sensor or receiver, or performing tyre rotation, TPMS self-learning is required, some vehicles can perform the following operations to complete self-learning:

1 Power off and lock the vehicle for 25 minutes.

2 Drive continuously at speeds in excess of 25mph (30 km/h) making numerous turns during the learning process.

Note: Ensure that the TPMS sensor is an original factory component.

Note: If self-learning fails, the TPMS malfunction indicator lamp will illuminate, please try repeating the above operations.

If you have any questions during the self-learning, please consult an MG Authorised Repairer for assistance.

Comfort Systems

Seat Adjustment *182*

Ventilation System *185*

A/C Control Pane *188*

A/C control Interface *190*

Steering Wheel Entertainment Control Buttons *192*

Intelligent Display interface *193*

Seat Adjustment

Front Seats

Note: Due to different model configurations, the function of the front seats are not completely identical.

Manual Adjustment

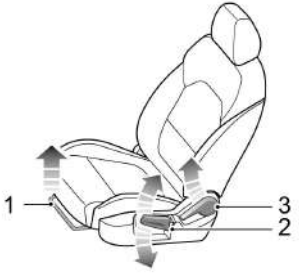

- Forward/Rearward Adjustment

  Lift the lever (1) under the seat cushion, slide the seat into an appropriate position and release the lever. Make sure that the seat is locked in place.

- Cushion Height Adjustment*

  Lift the handle (2) repeatedly to raise the seat cushion; and press the handle (2) repeatedly downward to lower the seat cushion.

- Backrest Angle Adjustment

  Lift the handle (3) to adjust the backrest to an appropriate angle; and release the handle ensuring that the backrest is locked in position.

Rear Seats

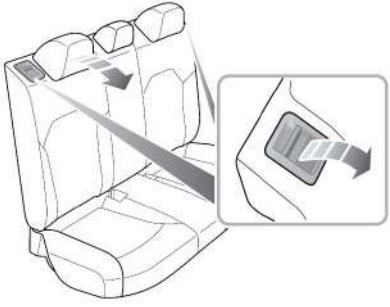

- Folding Rear Seats

  If you want to increase the luggage space, first fully lower (or remove) all the rear seat headrests, pull up the control handle respectively on both sides and fold the seat backs forward.

Note: When the rear seat headrests are not fully lowered or the front seat backrest is inclined backward excessively, the folding of the rear seat is very likely to damage the back of the front seat or the rear seat headrest.

- Unfolding and Locking Rear Seat Backrests

  When unfolding the rear seat back again, pull up the back control handle to release the seats back from the locked state, push the back until it reaches the locked position, the back is locked when you hear a click.

Note: When returning the rear seat backrest to the desired position, make sure that the rear seat belt is not trapped.

Head Restraint Operation

Adjust the height of the head restraint so that the top of it is in line with the top of the occupant's head. This location may reduce the risk of neck injuries in the event of a collision. Do not adjust or remove the head restraints while the car is moving.

Do not hang anything on any head restraint or head restraint rod.

The head restraint is designed to prevent rearward movement of the head in the event of a collision or emergency braking, thereby reducing the risk of head and neck injuries. The height of split type head restraint can be manually adjusted.

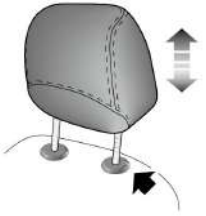

When adjusting a head restraint from a low to high position, pull the head restraint directly upward, and gently press it downward after it reaches the desired height to make sure that it is locked in position. To remove the head restraint, press and hold the guide sleeve button (as indicated by the arrow) on the left of the head restraint, then pull the head restraint upward to remove it.

When adjusting a head restraint from a high to low position, press the guide sleeve button (as indicated by the arrow) on the left of the head restraint, and press the head restraint downward; release the button after it reaches the desired height, and gently press the head restraint downward to make sure that it is locked in position.

Ventilation System

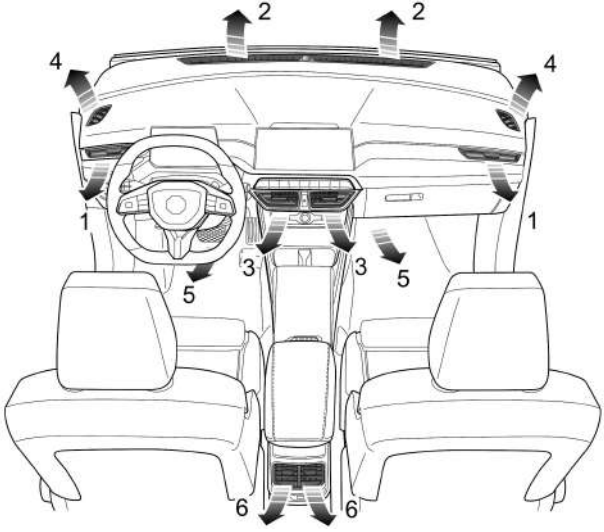

1 Side Vents
2 Windscreen Vents
3 Centre Vents
4 Front Side Window Vents
5 Front Footwell Vents
6 Rear Vents*

The A/C system is used to adjust the temperature, speed, humidity and cleanness of the air inside the vehicle. Fresh air is drawn in through the air intake grille under the windscreen and the A/C filter element. Always keep the air intake grille clear of obstructions such as leaves, snow or ice.

A/C Filter Element

A/C filter element is used to filter the air. To remain fully effective, the filter element should be replaced at the recommended service interval.

Vents

Regulation of Centre Vents

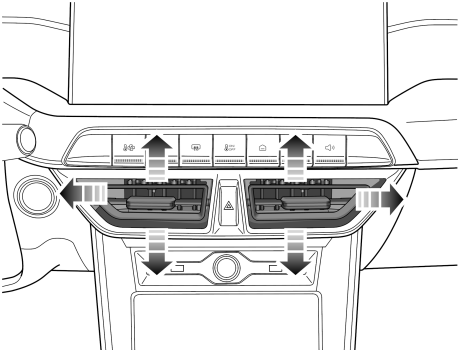

Move the knob in the centre of the louvres from side to side to open or close the vent. Direct the air flow by moving the knob up and down, or from side to side.

Regulation of Side Vents

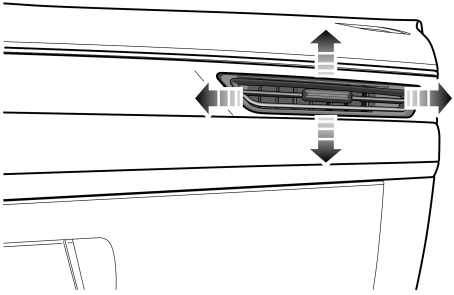

Move the knob in the centre of the louvres from side to side to open or close the vent. Direct the air flow by moving the knob up and down, or from side to side.

Regulation of Rear Vents*

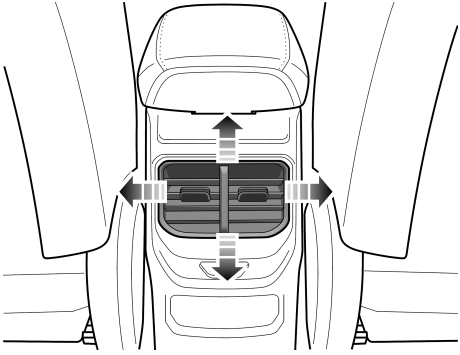

Move the knob in the centre of the louvres from side to side to open or close the vent. Direct the air flow by moving the knob up and down, or from side to side.

A/C Control Pane

Control Panel

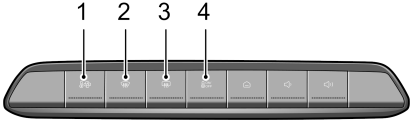

1 Shortcut Key to A/C interface

2 Defrost/Demist Button

3 Heated Rear Window Button

4 Shortcut Key to A/C On/Off

Shortcut Key of A/C On/Off

Touch the A/C On/Off shortcut key to turn the A/C system on/off.

Note: All functions will revert to the state prior to switching off, if you operate the A/C system using the A/C Control Shortcut.

Defrost/Demist Button

Touch the Defrost/Demist button, the button indicator lamp will illuminate, and the system will enable Defrost/Demist function to clear the mist or frost on the windscreen and front windows.

Touch the Defrost/Demist button again to exit the defrost/demist function, and the system will return to the previous state.

In the defrost/demist mode, turning the cooling function on/off and switching the air circulation mode will not exit the defrost/demist mode; operating the air distribution mode will exit the defrost/demist mode.

Heated Rear Window Button

The heating elements on the inside of the rear window are easily damaged. DO NOT scrape or scratch the inside of the glass. DO NOT stick labels over the heating elements.

Enable/disable the heated rear window function by touching the Heated Rear Window button. The function is enabled when the indicator illuminates and is disabled

when the indicator goes out. The heated rear window function will be automatically disabled after it has been enabled and working for a certain period.

Note: The heated rear window function will only operate when the vehicle is in the READY/RUNNING state.

Control Panel B*

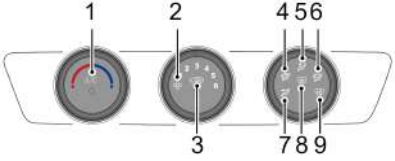

1 A/C On/Off Button and Temperature Control Knob

2 Blower Speed Control Knob

3 Adjustment Button for Air Internal/External Circulation Mode

4 “Face+Feet” Mode

5 “Feet” Mode

6 “Windscreen+Feet” Mode

7 “Face” Mode

8 Heated Rear Window Button*

9 Windscreen Defrost/Demist Mode

A/C control Interface

Air Conditioning Control Interface - Connected Car *

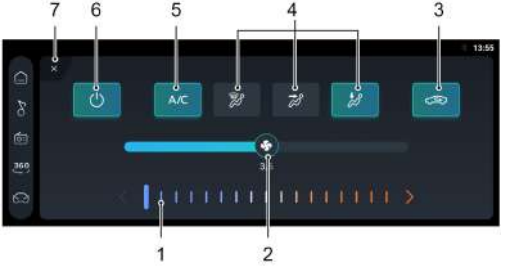

1 Temperature Control Bar
2 Blower Speed Control Bar
3 Air Recirculation Mode
4 Air Distribution Mode
5 A/C On/Off
6 System On/Off
7 Exit A/C Interface

System On/Off

Touch the System On/Off Button on the control interface to switch the system ON/OFF.

A/C On/Off

Touch the A/C On/Off Touch Button to turn the A/C ON/OFF.

Air Distribution Mode

Select the corresponding Air Distribution Mode Touch Button as required to regulate the air distribution mode.

There are three different air distribution modes and multiple combinations can be selected according to driver requirements.

Windscreen Mode: Directs air to the windscreen/defrost and front side window vents.

Note: In this mode, a small amount of airflow will be directed to the side vents.

Face Mode: Directs air to the side and centre vents.

Feet Mode: Directs air to the footwell vents.

Note: In this mode, a small amount of airflow will be directed to the side, windscreen/defrost and front side window vents.

Windscreen and Face Mode: Directs air to the windscreen/defrost, front side window, side and centre vents.

Windscreen and Feet Mode: Directs air to the windscreen/defrost, front side window and footwell vents.

Note: In this mode, a small amount of airflow will be directed to the side vents.

Face and Feet Mode: Directs air to the side, centre and footwell vents.

Windscreen, Face and Feet Mode: Directs airflow to the windscreen/defrost, front side window, side, centre and feet vents.

Air Recirculation Mode

Touch the air recirculation mode button as needed to adjust the air recirculation mode.

During internal recirculation mode, the A/C system circulates the air inside the vehicle to meet the requirements of rapid cooling or heating, and at the same time, it can prevent fumes and dirty air from entering the vehicle.

During the external circulation, the A/C system draws air from outside the vehicle to ensure fresh air enters the vehicle.

Note: Leaving the system in internal recirculation mode can cause the windscreen to mist. If this happens, turn on the defrost/demist mode.

Temperature Control

Touch and slide the temperature control bar to regulate the temperature of the air supplied by the vents.

Blower Speed Control

Touch and slide the blower speed control bar to regulate the blower speed.

Steering Wheel Entertainment Control Buttons

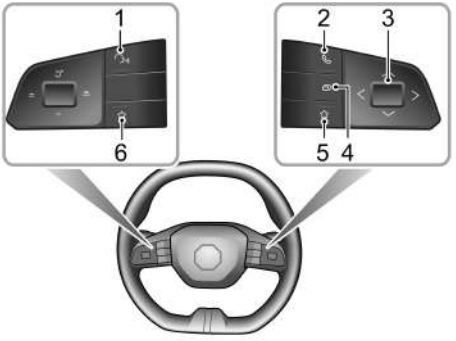

1 Speech Recognition Function Button
Short press to turn on the phone's connected voice recognition function; short press again to exit the speech recognition function.

2 BT Phone Button
Short press to answer an incoming call,long press to end the call.

3 Function Adjustment Button (OK Button)
Whilst in the infotainment mode, move up to increase volume, move down to decrease volume, move to the right to select next track and move to the left to select the previous track. Short press to mute or cancel mute.

4 Infotainment/Instrument Display Button
The function adjustmentbutton is a dual-purpose button, which when pressed will switch control betweenthe Instrument display and the Infotainment system.

5 Right Shortcut Button
This function button can be customized in the vehicle settings on the homepage.

6 Left Shortcut Button
This function button can be customized in the vehicle settings on the homepage.

Intelligent Display interface

Basic Operations

Control Panel

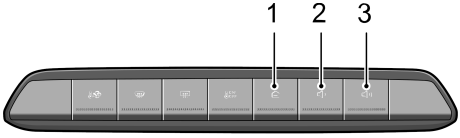

1 ⌂ (HOME Button)
Short press to return to the main interface; long press to restart the system.

2 Volume Down Button

3 Volume Up Button

Main System Interface

Swipe left and right to display all system function icons, such as music, radio, video, Bluetooth phone, A/C, etc.

1 Audio Source Information
Displays music/radio status information, including song name, play/pause, ect.

2 Status Bar
Displays Bluetooth, Weather, Time, etc.

3 Homepage Card
Including Music, Bluetooth Phone, Mobile Internet, etc.

Click to enter the relevant function interface.

4 Menu Bar

Displays 5 shortcut function icons: HOME, Navigation, Bluetooth Music Radio, Phone, My Car. Long press on the menu bar icons (except for the HOME icon) to edit the menu bar.

Note: The pictures in this chapter are for reference only. The content displayed on the interface may vary depending on different vehicle configurations, software versions, and market regions, etc. Please refer to the actual vehicle interface diagram for accuracy.

Bluetooth Pairing and Connection

The steps required to pair a Bluetooth device and connection are as follows:

1 Touch [Bluetooth] in the Settings interface to enter the Bluetooth Connection interface, and turn on the Bluetooth switch.

2 Open the Bluetooth function on your phone and search for this entertainment console to pair

3 Your phone will receive a Bluetooth pairing request, confirm and click 'Pair'.

4 After successful pairing, the status bar of the vehicle will display , If pairing fails, please try repeating the above steps.

Successfully paired phones will be stored in the 'pairing history' list. Touch the phone name list to connect to the Bluetooth of the phone, and touch [Disconnect] to disconnect the Bluetooth connection. Touch [Remove the device] to remove the phone from the pairing history device list.

Vehicle-Mobile Phone Connection

Note: Due to the differences of mobile phone models and system versions, some mobile phones may not be able to use the vehicle-mobile phone interconnection function normally.

General functions

Long press the floating ball on the interconnection projection screen interface, which can be dragged as needed. After release, the edge of the hovering ball will be displayed.

Click on the floating ball on intelligent display interface to exit the screen, return to the homepage.

When the Vehicle-Mobile Phone Interconnection is interconnected, enter interface again and display the face before exiting the screen.

Apple CarPlay

Apple CarPlay enables information interaction between an Apple mobile phone and the on-board infotainment system, including map, music, telephone, voice recognition and more.

Connection Method

1 Confirm that your iPhone has the Carplay function and that it is turned on.

2 Connect the mobile phone to the infotainment system main frame using an approved USB cable.

3 In the main interface, touch [Apple CarPlay] area to enter the Apple CarPlay interface.

4 After the vehicle and mobile phone are successfully connected, you can operate the iPhone using the infotainment system screen.

5 Press the HOME button on the control panel to return to the main system interface. Or click on the icon on the screen homepage to return to the car homepage.

Android Auto

Android Auto enables information interaction between the android mobile phone and the on-board infotainment system, including map, music, telephone, voice commands and so on.

Connection Method

1 Connect the mobile phone to the infotainment system using an approved USB cable.

2 In the main interface, touch the [Android Auto] area to enter the Android Auto interface.

3 After the vehicle and mobile phone are successfully connected, you can operate the Android Auto system using the infotainment system screen.

4 Press the HOME button on the control panel to return to the main system interface. Or click on the screen homepage to return to the car homepage.

Navigation

Warnings and safety information

The navigation system helps you find your way to your destination with the built-in GPS receiver. MG3 NAVIGATION does not transmit your GPS position, meaning you will not be tracked by external users.

It is important to look at the display only when it is safe to do so. If you are the driver of the vehicle, we recommend that you plan and review your route before you start your journey. Plan the route before your departure and stop if you need to change the route.

You must follow the traffic rules. If you deviate from the planned route, the navigation system changes the instructions accordingly.

Activation

When you start your navigation system for the first time, a few steps are necessary to set it up.

A GPS signal is required to activate the navigation system. Please launch the system in an area with strong GPS signal.

You will receive a warning if a GPS signal is not available. In this case, please drive to a more suitable location, and start the system again.

Please follow these steps to activate your navigation system:

1 Read and accept the end-user license agreement. This is necessary to use the product.

2 Read and accept a reminder that while using navigation, you must always follow actual traffic rules and pay full attention to driving.

Navigation view

The navigation system works with digital maps which are not simply the computerised versions of traditional paper maps. Similarly to paper road maps, the 2D mode of digital maps shows you streets and roads. Elevation is also illustrated in colour.

Tap the map anywhere if you want to browse your surroundings. Buttons appear to change between a 3D/2D view, and to rotate or zoom the map. You can also swipe your fingers to move the map in any direction.

The features available in this view are different when you are driving without a destination and when you are navigating on a planned route.

Driving without a destination

The navigation view displays the following screen buttons and information on the map when you do not have a planned route:

1 Searching for a destination
Tap to set a destination for your route. See chapters on "Selecting a destination" below for detailed instructions.

2 Saved locations

Tap to navigate to a previously saved location. This includes your Home / Work address. Tap 'Home' or 'Work' to define their locations, then use the same buttons to find your way.

3 Navigation menu

By tapping it, you can open the Navigation menu, where you can reach other parts of the navigation system.

4 Current position marker

The current position is displayed as a blue arrow by default. When there is no GPS position, the current position marker is transparent and it shows your last known position

5 Street name

It shows the current street name. By tapping it, you can open the 'Where Am I' screen with information on your current location.

6 Speed limit warning

It shows the current speed when driving.

Driving with a destination

The navigation view displays the following screen buttons, data fields, and route information on the map during navigation:

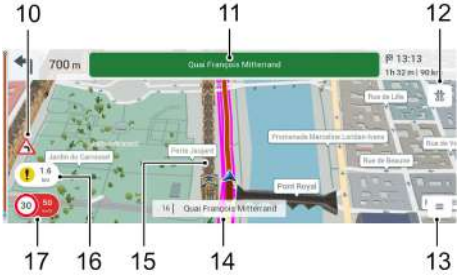

1 Following manouevre

if another manoeuvre is close to the first, this will then be displayed.

2 Next turn preview

It shows the type of the next manoeuvre and its distance.

3 Next street

It displays the name of the next street.

4 Data fields

Three data fields show the following information: the estimated time of the arrival at the destination, the remaining time of the trip and the remaining distance to the destination.

You can change the default values by tapping the area where the data fields appear.

5 Parking around destination

It appears near the destination. By tapping it, you can check the available parking facilities around your destination.

6 Destination menu

It appears near the destination. By tapping it, you can check the trip summary, the menu also allows you to view places around the desired destination. You are also able to save the current location.

7 Lane information

On multi-lane roads, it shows the lanes ahead and their directions. The highlighted arrows represent the lanes and direction you need to take.

8 Current position marker

The current position is displayed as a blue arrow by default. When there is no GPS position, the current

position marker is transparent and it shows your last known position.

9 Planned route

The planned route is displayed as a green line.

10 Warning road sign

It shows any warnings for the current road (for example, dangers, sharp corners).

11 Signpost

It shows the available destinations and the road details, similar to how they appear in real life.

12 Motorway services

By tapping it, you can check the details of the next few service stations (petrol stations, restaurants) when travelling on a motorway.

13 Navigation menu

By tapping it, you can open the Navigation menu, where you can reach other parts of the navigation system.

14 Street name

It shows the current street name. By tapping it, you can open the 'Where Am I' screen with information on your current location.

15 3D objects

It will display hills, mountains, roads, landmarks, and buildings in 3D.

16 Alert point warning

This feature notifies the user when approaching speed cameras * , school zones and railroad crossings etc. Ensure this feature is legal in the country you intend to drive in.

17 Speed limit warning

It shows the current speed limit of the road you are driving on.

If you are approaching a motorway exit or a complex intersection (and the needed information exists), the map is replaced with a 3D view of the junction. You can turn this off in Settings/Navigation View.

When entering a tunnel, the map is replaced with a generic tunnel image. You can turn this off in Settings/Navigation View.

Navigation menu

Tap ≣ to open the Navigation menu:

Tap “Multipoint Route” to build your route by adding several route points in a customised order. See "Creating a multi-point route".

Tap "Setting" to customise the way the navigation software works. See "Settings".

In the navigation menu, you also have the following additional controls:

- 3D View mode

  Indicates the map view mode (it is a 3-dimensional view by default). Tap it to change the view to ‘2D’ mode or ‘2D, North up’ mode.
- Unmute

  Mute voice guidance or mute all all sounds of the navigation system.

When you are navigating with a planned route, the following menu options are also available:

- Tap "Add stopover" to add an intermediate destination to your route.
- Tap "Delete Route" to delete the next waypoint or the whole route.
- Tap "Route Summary" to view the route in its full length on the map and make changes to it.
- On the Route Summary screen, you can tap "Alternatives" to check alternative routes to your destination, and select another one if needed.
- On the Route Summary screen, you can also tap ^ to access the following additional options:Route Preferences, Avoid and Itinerary.

Selecting a destination with quick search options

You can search for addresses, places of interest, saved locations, or recent destinations using the same search screen. This section shows how you can navigate to pre-defined locations such as:

- parking, fuel stations and restaurants as common places of interest.
- your recent destinations
- your saved locations

- a location defined by its geographical coordinates

Operation

Tap "Search" and the combined search screen appears.

Choose your destination from the following:

1 Select a place of interest:parking places, gas stations, restaurants.

In all cases, the search is carried out near your current location.

2 Tap "Around Here" on the next screen if you wish to change the search area to another city.

3 Select a previous destination: Unless this is the first time that your navigation system is used, you will also have a list of previous destinations on the screen. Tap any of them to use it again as your destination, or scroll the pages with your fingers if what you need is further down the list.

4 Select a saved location:Tap ☆ to access your previously saved locations. If you have not set your home or work address yet, you can do so on the next screen. Later, these two will be quickly accessible from the main navigation view.

The map appears with the selected destination in the middle. If necessary, tap the map somewhere else to modify the destination. The Cursor appears at the new location.

Tap "Select" to confirm the destination.

Shortly, your route is calculated and shown on the map in full.

To start navigation right away, just wait for a few seconds, or tap "Start".

On this screen, you can check and adjust the planned route in several ways: Tap "Alternatives" to compare this route to other possible routes. Tap ^ to change route preferences (such as route planning method and road types), set up an avoidance, display an itinerary.

Selecting a destination by name or address

You can search for addresses, places of interest, saved locations, or recent destinations using the same search

screen. This section shows how you can navigate to an address or location by entering its name:

1 Tap "Search" and the combined search screen appears.

2 Tap "Name or address", then start typing either an address (street name and house number), or the name of a location that can be a place of interest, a previous destination, or one of your saved locations.

Under the text input field, you can see the search area. This is Global by default, which means that the search will be carried out in a very wide area around your current location. Tap this button to change the search area to another city.

3 Type a few characters, and the search will start in the background.In most cases, you do not have to type the entire name or address of the destination. Pause typing for a few seconds to display the matching search results above the keyboard.

4 Tap the search result you were looking for.

If it is not yet displayed, keep typing, or scroll the search results with your finger to hide the keyboard and browse the list in full-screen. (You can enable the keyboard again by tapping the input field at the top of the screen.)

Tap ^ to sort the list of search results by relevance, name or distance.

5 The map appears with the selected destination in the middle.

If necessary, tap the map somewhere else to modify the destination. The Cursor appears at the new location.

You can tap ^ to store the selected location in Saved Locations.

6 Tap "Select" to confirm the destination.

7 Shortly, your route is calculated and shown on the map in full.

To start navigation right away, just wait for a few seconds, or tap "Start".

On this screen, you can check and adjust the planned route in several ways:

1 Tap "Alternaives" to compare this route to other possible routes.

2 Tap ^ to change route preferences (such as route planning method and road types), set up an avoidance, display an itinerary.

Creating a multi-point route

The planned route can have several intermediate destinations (stopovers, waypoints) before its final destination. You can create a multi-point route in the following ways:

Adding a stopover to an existing route

Select a destination as described in the previous chapters.

On the Map screen, tap ≡ to open the Navigation menu.

Tap "Add Stopover" to add an intermediate waypoint. The steps are the same as for the first destination.

Creating a new multi-point route

1 On the Map screen, tap ≡ to open the Navigation menu.

2 Tap "Multipoint Route"

3 Tap "Destination" to add any of your intended destinations. The steps are the same as described in the previous chapters.

4 Now you have several options to add a new route point:

Tap "Final Destination +" to add a new destination to the end of your route. This changes your previousdestination into a waypoint on the route.

Tap "Insert Waypoint +" between any of your route points to add a stopover to your route.

Tap "..." next to any route point to access further options, such as changing their order on the route, deleting or saving a route point, or checking its location on the map. The ^ icon gives you further options: you can delete the entire route, or you can optimise the order of the waypoints or the order of all route points, including the destination.

5 When finished, tap "Calculate Route" to start navigation.

Settings menu

To adjust navigation-related Settings, tap ≣ , and "Setting".

The Settings menu provides the following options:

Route Preferences

Route Planning Method: tap "> " to change your preference between fast, easy and green (fuel-saving) route types.

Road Types: choose what kind of roads to include or exclude when planning a route. For example, disable 'Road With Period Charge' if you do not want to buy a motorway vignette.

Sound

Adjust the different sound volumes and fine-tune the behaviour of voice guidance.

Warnings

Speed Limit: Set up whether you want to be warned when speeding. You can define a tolerance level, meaning that you will be warned a little below or above the legal limit.

Alert Types: Use the main switch to control all alerts (such as speed cameras or dangerous locations), or fine-tune warnings by individual alert types.

The warning for speed cameras is usually disabled when you are in a country where speed camera warnings are prohibited. However, please always make sure that using this feature is legal in the country where you intend to operate it. Use it on your own responsibility.

Navigation View

Fine-tune the appearance of the map screen.

Select between different map color schemes for daytime and night driving

Use the switch next to each item to enable or disable certain map and navigation features, such as:

- 3D landmarks and buildings
- a route progress bar showing your advance on the planned route
- the motorway services icon
- an automatic overview that zooms out the map when driving on longer roads

- lifelike signpost display above the road
- a 3D static junction view in complicated intersections
- a tunnel view when the GPS signal is lost in long tunnels

Regional

Change the voice guidance language and speaker, or adjust the time and date formats and the measurement units.

GPS Information

Shows the accuracy of the current GPS signal and the number of satellites in view.

About

Check legal and statistical information about your navigation software.

Start Configuration Wizard

Run a setup wizard to modify the basic navigation-related settings.

Intelligent Driver Assistance

Instructions for Intelligent Driver Assistance	*208*
Cameras and Radars	*210*
*Constant Speed Cruise Control**	*214*
*Adaptive Cruise Control (ACC)**	*217*
*Intelligent Cruise Assist (ICA)**	*226*
*Intelligent Overspeed Warning**	*229*
*Speed Limit Assistance System**	*231*
Lane Departure Assist	*235*
Front Collision Assist (FCA)	*238*
Ultrasonic Sensor Parking Aid	*241*
*Parking Camera**	*243*
*360 Around View Monitor System**	*244*
Indirect Driver Fatigue Monitoring System	*245*

Instructions for Intelligent Driver Assistance

Disclaimers for Intelligent Driver Assistance Function

Before using the Driver Assistance functions, the user should read, accept, understand and pay particular attention to the following:

1 At present, all available Intelligent Driver Assistance functions require the driver to maintain full control during the entire driving process, the vehicle is NOT to be considered as full autonomous driving.

2 The user and driver should carefully read, learn, understand and implement the relevant content in the Owner's Handbook of this vehicle, and use these functions (and any related functions) in accordance with the requirements herein (in particular, the functional module instructions and use restrictions for intelligent driver assistance and intelligent cockpit). The user and the driver must always ensure they maintain full control and responsibility, observing all local Road Traffic Safety Laws and Regulations, and always be in a state of readiness to resume control of the steering wheel and braking of the vehicle. In the event of any personal or property damage caused by the user or the driver (for example, failure to use the vehicle in accordance with the requirements set out in the Owner's Handbook, or failure to retake control of the steering wheel and/or brakes at any time as required by the Road Traffic Safety Law), the user or the driver shall bear all responsibilities and consequences.

3 The Intelligent Driver Assistance function can only play an auxiliary role under certain conditions, and CANNOT replace the driver's observation of the road environment. The driver should drive cautiously and MUST NOT rely on the function. The Owner's Handbook has stated clearly in its obligation the various restrictions on the use of auxiliary functions (i.e. the circumstances under which certain functions may not be enabled, become impaired or may stop working).

4 The Intelligent Driver Assistance function has requirements for complete and successful operation, these include conditions such as weather, road

surfaces and driver operations, operation may become impaired, fail or become limited due to several factors, which are not related to the design and application defects of the product. If the user and the driver cannot understand or accept the above disclaimers, do not use the Intelligent Driver Assistance functions. If the functions are enabled, please exit immediately.

Camera and radar operation may be impaired in certain driving situations, weather and road conditions. In areas where there are complex traffic conditions such as intersections road junctions with congestion, or poor general conditions, the driver MUST take full control of the vehicle.

The Intelligent Driver Assistance system can detect the road and environmental information ahead of the vehicle using the camera. It can provide warning messages or intervene when certain conditions are met in order to assist the driver in controlling the vehicle in a more safe and reliable manner.

Note: DO NOT operate any infotainment switches whilst driving. If you wish to make any settings changes, please pull over when it is safe and legal to do so.

Cameras and Radars

Driver Assistance Camera

The following cameras are installed on the vehicle: 360° surround view cameras, front view camera module, parking camera (subject to the specification of the vehicle purchased).

The camera carries out target identification in the form of vision, and provides identification information for related functions after identifying the target in the surrounding area of the vehicle.

Camera Installation Position

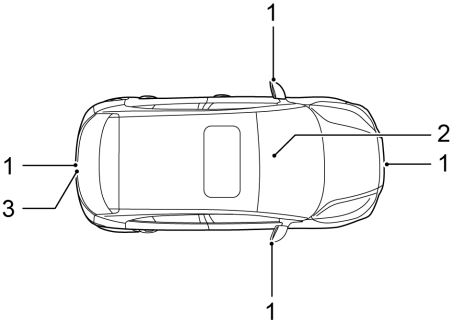

1 360° Surround View Camera*

2 Front View Camera Module*

3 Parking Camera*

Note: The configuration of cameras are subject to the specification of the vehicle purchased.

Note: To ensure that the front view camera works properly, always keep it clean and free of ice, snow, water, dust, etc.

Note: To ensure the camera works properly, always keep the windshield in front of the camera clean with no objects blocking the view between the camera and the windshield.

Note: Please wipe camera lenses with a soft cloth or wash with water (of low pressure) when foreign objects are found on the camera surface. Do not use a high pressure water jet to flush the camera, and do not use abrasive or sharp objects to clean the camera.

Camera Calibration

The calibration of front view camera requires professional knowledge and tools. If calibration is required, please seek an MG Authorised Repairer. Recalibration of the front view camera module is necessary in the following situations:

- The module has a maladjustment failure, for example the position of the camera has changed;
- Remove/refit the camera or its bracket;
- Remove/refit the windscreen;
- The four-wheel alignment parameters have changed.

Note: If the front detection radar is subject to strong vibration or slight impact, the mounting position of the front detection radar needs to be checked and re-calibrated as necessary.

Note: Please consult an MG Authorised Repairer for more details about camera calibration.

In the following situations, the detection performance of front view camera will be affected:

- Driving in poor weather conditions where visibility is reduced or impaired due to thick fog, heavy rain, snow, dust etc.
- Affected by ambient light, for example low light levels at night, poor auxiliary lighting, excessive light from the rear lights of the vehicle ahead, light from oncoming vehicles, abrupt changesin brightness with a quick bright/dark change (tunnel entrance/exit), driving on surfaces with strong reflective properties (road surface covered with water or snow), tunnels, inside a building etc.
- The front view camera view is partially or fully blocked by obstacles, e.g. dust, foreign objects, dirt/mud, snow, excessive water (rain), frost or water spray from the road on the windscreen.
- The windscreen viewing area is damaged.

- Not calibrated after removing/refitting the front view camera or the windscreen.
- The front view camera is not secured in place.

Driver Assistance Radar

Depending upon specification, the vehicle may feature ultrasonic radars.

These are only used to provide identification information for related functions after identifying the target in the surrounding area of the vehicle.

Radar Installation Position

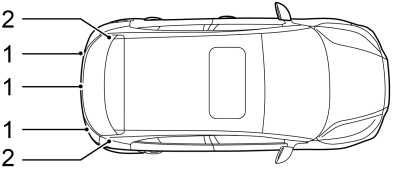

1 Ultrasonic Radar

2 Corner Radar*

Note: The configuration of the radars is subject to the vehicle purchased.

Note: To ensure that the radars work correctly, always keep them clean and free of ice, snow, water, dust, etc.

Note: Please wipe with soft cloth or wash with water (of low pressure) when foreign objects are found on the radar surface. Do not use a high pressure water jet to flush the radar, and do not use abrasive or sharp objects to clean the radar.

In the following situations, the detection performance of the radars will be affected:

- The radar or bumper is covered by foreign objects such as ice, snow, mud, stickers, tape or trims, etc.
- Unauthorised paint and spray processes are used for the bumper.
- The radar or bumper is damaged or their installation positions changed.
- The radar is affected by electromagnetic interference from other equipment.
- Small and enclosed environments such as small garages etc.
- The vehicle is towing a trailer.
- The radar may not work correctly due to limited detection performance in an open field (such as an open parking lot) or on an open road.

Note: Any snow on the radar should be removed with a brush, while any ice is preferably removed with a deicing spray.

Constant Speed Cruise Control*

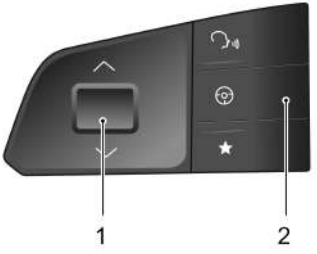

- Speed Adjustment Knob (1)
- Pilot Switch (2)

Cruise control enables the driver to maintain a constant road speed without using the accelerator pedal. This is particularly useful for motorway cruising, or for any journey where a constant speed can be maintained for a lengthy period.

Cruise Control System Activation

The cruise control system is operated by using the cruise switch located at the left side of the steering wheel.

1 When the Ignition/Start switch is in the ON/READY position and the speed is greater than 25 mph (40 km/h) , short press the Pilot switch (2) to activate the Cruise Control System, the constant speed cruise indicator lamp in the instrument pack illuminates green. The target speed of the cruise system will be set at the actual speed the vehicle is traveling when it is activated, and the target speed is displayed below constant speed cruise control indicator lamp . After activation, the cruise control system will maintain the target speed without pressing the accelerator pedal.

2 If the cruise control system is in the Standby state and the current speed is greater than 25 mph (40 km/h) , the cruise control system can also be activated by pressing the speed adjustment knob (1). The target speed of the cruise system will be set at the actual speed the vehicle is traveling when it is activated, the target speed is displayed below the constant speed cruise control indicator lamp.

Note: The adjustment knob can be operated in various ways such as being moved up/down, or being pressed. Pressing the adjustment knob when the constant speed cruise control system is activated will update the vehicle speed to the current speed.

Target Cruise Speed Adjustment

When the cruise control is active:

The vehicle can still be accelerated by pressing the accelerator pedal (such as overtaking). When the new desired speed is achieved, press the speed adjustment knob (1) to update the target cruise speed to the current speed.

Push the knob (1) upwards/downwards and hold to accelerate or decelerate automatically, release the switch when the desired speed is reached.

In addition, pushing the knob upwards/downwards and releasing immediately can adjust the speed. Each press will increase or decrease the speed appr. 1 mph (1 km/h) .

When the cruise control system is in operation, the vehicle can still be accelerated by pressing the accelerator pedal (such as overtaking). Releasing the accelerator pedal will return the vehicle to the set cruise speed.

Pause

Cruise control will drop from active to Standby, and the lamp instrument panel will illuminate white if:

- Short press Pilot Switch (2).
- Brake pedal is applied.
- The shift control knob is moved to N position.
- Poor road conditions may lead to the activation of the Stability Control System (SCS). For safety reasons, the cruise control system will automatically exit to Standby state.
- Undulating roads or hills may cause the vehicle's speed to drop or rise excessively, and the cruise control system will automatically exit to the Standby state.
- The electronic parking brake (EPB) is activated.

Resume

When the cruise control remains in Standby after the disengagement, move the speed adjustment knob (1) upwards once to activate it again. The target cruise speed

will return to the target speed before exiting the cruise control system.

OFF

Long press the Pilot switch (2) to turn off the cruise control system.

Note:

- ***Do not use the constant speed cruise control system in unsuitable conditions, such as in rainy days, on slippery surfaces, or in traffic conditions that do not allow to maintain a constant speed.***
- ***ALWAYS turn off the constant speed cruise control system when it is not in use.***
- ***When the vehicle is in "Sport" mode, it is not recommended to use the constant speed cruise control system.***
- ***During the operation of cruise control system, the actual speed may deviate from the target speed to some extent due to control precision or road conditions.***
- ***Excessive deviation of the actual vehicle speed from the target speed due to a slope or road surface, etc., or triggering the SCS to operate may cause the constant speed cruise control system to automatically exit to the "Standby" mode.***
- ***Do not press a switch for excessively long periods, or press multiple switches simultaneously, this may cause the constant speed cruise control system to fail. If this situation occurs, when it is safe to do so, please restart the vehicle.***

Adaptive Cruise Control (ACC)*

The adaptive cruise control system is designed as a comfort system. It provides assistance to the driver, but DOES NOT replace any of the driver's responsibilities. When using the adaptive cruise control system, it is important that the driver maintains concentration at ALL times and is prepared to take action. Otherwise, accidents or personal injuries may occur.

Depending on whether there is vehicle ahead, the adaptive cruise control system can also conduct automatic switching between constant speed cruise and car-following cruise. With the adaptive cruise control system, the vehicle is allowed to conduct constant speed cruise within a certain speed range, or conduct car-following cruise by setting the distance between the vehicle and vehicles ahead. If a vehicle is detected in your driving path, the ACC system may apply moderate brakes or acceleration to maintain the selected following distance.

Note: The adaptive cruise control system is designed for highways and roads in good condition. It is recommended that it is NOT used on urban roads and mountain roads.

Adaptive Cruise Activation

After following the vehicle ahead to a stop, the driver must ensure that there are no obstacles or other traffic participants, such as pedestrians, directly in front of the vehicle before starting off to follow the vehicle ahead again.

Whilst using the car following cruise function, it is strongly recommended that the driver does not touch the accelerator pedal. Any activation of the accelerator will not allow the adaptive cruise control system to automatically apply the brakes, and the vehicle is only controlled by the driver's manipulation of the accelerator pedal.

DO NOT exit the vehicle when the adaptive cruise control system is keeping the car stationary. Before exiting the car, the shift control knob should be in the P position and the ignition/Start/Stop switch should be OFF.

If the adaptive cruise control system is keeping the car stationary, the driver still needs to pay full attention and be ready to apply the brakes manually. Note that if the system is disabled, turned off or cancelled, the vehicle will no longer stay still, it may move forward or slip backward.

When driving on a bend, the adaptive cruise control may actively reduce the vehicle speed to maintain vehicle stability and safety.

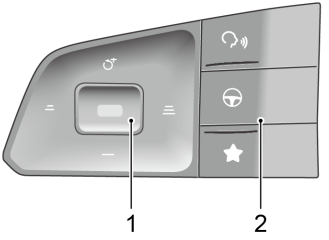

1 Adjustment Knob

2 Pilot Switch

The adaptive cruise control system can be set using a combination of switches in the entertainment display and the left side of steering wheel.

1 If the switch in the entertainment display is in the OFF state, the adaptive cruise control system is in the OFF state.

2 Move the switch in the entertainment display to the ON state, and short press the Pilot switch (2), the indicator light for the adaptive cruise control system in

the instrument pack will illuminate blue, the adaptive cruise control system is in Activated state , its target speed is the actual speed at activation , If your vehicle speed is less than 20 mph (30 km/h) , then the target speed of the system is set at 20 mph (30 km/h) . If the speed of the vehicle ahead is greater than the target cruise speed of your vehicle, your vehicle will maintain the target speed and conduct constant speed cruise; if the speed of the vehicle ahead is lower than the target cruise speed of your vehicle, it will enter the car-following cruise, a tail schematic of the vehicle ahead is displayed in instrument pack. In the car-following cruise, you can follow the vehicle ahead to a stop. If the stop time is below a certain time, your vehicle may automatically start off to follow the vehicle ahead, if this is not the case, then the driver will need to re-activate the adaptive cruise control system according to the instrument prompt.

Note: Manual deactivation of the Electronic Stability Control (ESC) will inhibit the operation of the adaptive cruise control system.

Adaptive Cruise Target Following Distance Adjustment

When the adaptive cruise control system is activated, move the adjustment knob to the right (to increase the following distance) or left (to decrease the following distance) ,there are 3 distance settings, the distance setting will be displayed on the instrument pack.

Select an appropriate following distance according to the difference in relative speed with the vehicle ahead, the higher the relative speed, the longer the following distance that should be selected. Always consider the traffic and weather conditions, the optional following distance range may not be suitable for all drivers and driving conditions.

Adaptive Cruise Control Target Speed Adjustment

When the adaptive cruise control system is active:

- Use the accelerator pedal to reach the desired speed, press the adjustment knob (I), then release the adjustment knob and accelerator pedal. The vehicle will cruise at the desired speed.

- Move the adjustment knob upward or hold, the target speed will increase until the desired set speed appears the instrument pack, then release the knob. When it is confirmed that there is no vehicle ahead or the vehicle ahead is beyond the pre-selected following distance, the vehicle speed can be increased to the set speed.
- Move the adjustment knob downward or hold, the target speed will decrease until the desired set speed appears in the instrument pack, then release the knob, and the speed will be decreased to the set speed.

Note: If the vehicle ahead continually makes hard acceleration or deceleration manoeuvres the adaptive cruise control may not be able accurately maintain the required distance between vehicles. It is important that the driver always concentrates and pays attention to the current vehicle position and situation in case they need to make a braking or avoidance manoeuvre.

Adaptive Cruise Control Pause

When the adaptive cruise control system is activated, short press the Pilot switch to cancel the function, the system will exit to the Standby state.

Automatic Deactivation of Adaptive Cruise Control

In the following situations, the adaptive cruise control system may be automatically suspended transferring full control of the vehicle to the driver:

- Operating the switch to turn off the ACC.
- Pressing the brake pedal whilst the vehicle is in motion.
- Moving the shift control knob to either R or N position.
- The driver unfastens his/her seat belt.
- Pressing and holding the accelerator pedal beyond a preset time period.
- Opening any door, bonnet or tailgate.
- Pulling the EPB switch up to apply the parking brake.
- Following the vehicle ahead to a stop and the stop time exceeds a certain period of time.
- The camera or radar view is blocked, the surrounding environment triggers the preset safe exit mechanism of the sensors, or the system fails.

Note: If following the vehicle ahead to a stop with the adaptive cruise control system enabled, if any of the following conditions occur whilst the vehicle is in a stopped state, the EPB will automatically be applied:

- ***The driver unfastens the seat belt;***
- ***The driver door is opened;***
- ***The stationary time exceeds the preset time period.***

Adaptive Cruise Override

If the driver has cause to use the accelerator pedal when the adaptive cruise control system is activated, the vehicle will remain in Cruise mode while the vehicle speed increases. When the accelerator pedal is released, the adaptive cruise control system will resume to operate at previously set cruise speed.

Adaptive Cruise Resume

If the adaptive cruise control system has reverted to, or been switched to, the Standby mode it can be reactivated by moving the adjustment knob upwards. The target cruise speed will automatically be set to the target speed before exiting the adaptive cruise control system.

Clearing Target Speed Memory

Switching the adaptive cruise control off in the entertainment display will turn off the adaptive cruise control system, synchronously clearing the system's set speed in the memory. Switching the ignition off will also clear the set speed stored.

Adaptive Cruise Control System Impairmentand Ineffectiveness:

- Your vehicle encounters a vehicle or object which is stationary ortraversing the lanes.
- Approaching the vehicle ahead too fast, and the system cannot apply sufficient braking force.
- The vehicle ahead is an oncoming vehicle, or it is making an emergency braking manoeuvre.
- The vehicle ahead is reversing.
- A vehicle suddenly cuts into the lane in front.
- Your vehicle encounters a vehicle driving at a low speed.

- Your vehicle encounters a vehicle with loaded items protruding from the body profile of the vehicle.
- Encounters a vehicle with a higher chassis (e.g., a truck).
- Your vehicle encounters pedestrians, non-motor vehicles or animals.
- The vehicle is driving on an uneven road or a complex traffic road section.
- The vehicle makes a sharp turn.
- Entering, leaving or driving in a tunnel.
- Driving in the shadow of mottled trees.
- Excessive weight being carried in the boot space or cargo area causing the front of the car to point upwards.

Special Driving Environments

The adaptive cruise control system has it's limitations. Listed below are some conditions that may be beyond the safe operating limits. The driver should maintain control of the vehicle and must remain alert at all times. They must pay special attention to the traffic conditions and surroundings, select the appropriate speed and be ready to take any required actions.

1 When turning at the intersection or driving into or out of the curve following the vehicle ahead, the adaptive cruise control system may be unable to detect the vehicle ahead on the same lane, or may respond to the vehicles in another lane.

Note: DO NOT use the adaptive cruise control system on entrance/exit ramps or sharp curves.

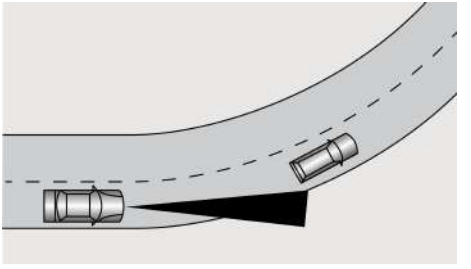

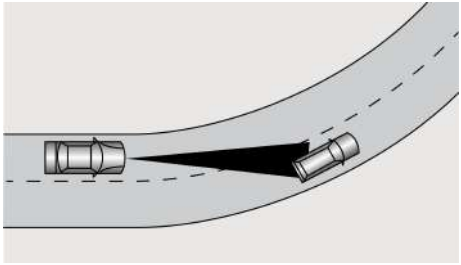

2 If the vehicle ahead changes the lane, but does not drive into the new lane completely, the adaptive cruise control system may be unable to detect the vehicle.

If the vehicle ahead changes lanes, but does not exit the lane completely, the adaptive cruise control system may determine that the vehicle ahead has already left and accelerates.

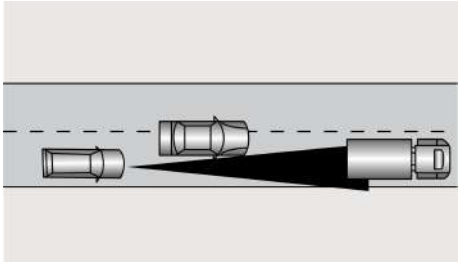

3 When driving on uneven roads that may include steep climbs or dips please DO NOT use the adaptive cruise control system..

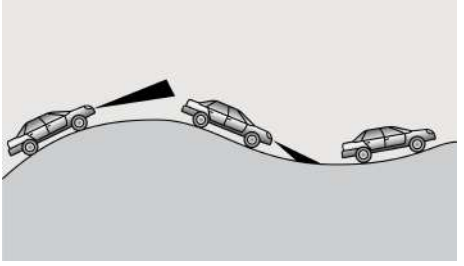

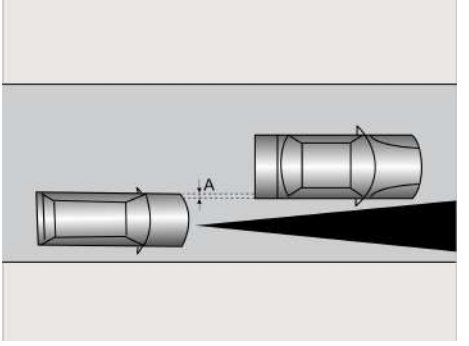

4 When driving behind a vehicle that is only partially overlapping your vehicle,(A) in the graphic, the adaptive cruise control system may be unable to detect anything.

Note: Please DO NOT use the adaptive cruise control system in the following situations:

- ***Driving in bad weather conditions;***
- ***When the ambient light is insufficient, the light is too bright, or the forward lighting of the vehicle is poor;***
- ***Driving on rough or poor road surfaces;***
- ***Driving through roadworks or construction sites;***
- ***Driving on low friction roads (the rapid change of the tyre traction may result in the excessive wheel slip).***

Intelligent Cruise Assist (ICA)*

Intelligent cruise assist is an auxiliary function that provides driver assistance. It provides assistance to the driver, it DOES NOT replace any of the drivers responsibilities. Due to the limitations of system detection and control when using the intelligent cruise assist, the driver must always hold the steering wheel, pay attention to the surrounding environment of the vehicle, and correct or take over the steering wheel control when necessary, otherwise accidents or personal injuries may be caused.

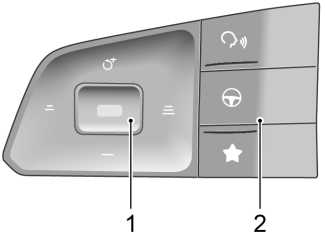

- Adjustment Knob (1);
- MG Pilot ON/OFF Switch(2);

The system switch is located in the entertainment display, and the system can be turned on/off in the appropriate Driver Assistance interface.

When the following conditions are met:

- The Traffic Jam Assist system switch on the entertainment display is on;
- The system detects the lane lines on both sides of the vehicle;
- The vehicle is in Drive gear.

Short press the Pilot switch to activate the traffic jam assist system. The traffic jam assist system works on the same basis of the adaptive cruise control system. If the lane lines ahead on both sides are clear, the system will assist the vehicle in driving within the lane; if there is a vehicle ahead and the lane lines are not clear when driving at a low speed, the system can assist the vehicle in following the track of the vehicle ahead.

Note: With the ACC system activated, the traffic jam assist system can be activated without pressing the MG Pilot switch when the above conditions are met.

In the absence of a steering input from the driver for acertain period of time, the system will provide warnings.

Note: The driver should adjust the vehicle speed and the following distance according to the road visibility, weather and road conditions. The traffic jam assist system does not respond to pedestrians, animals, stationary vehicles and vehicles that drive across the lane or oncoming vehicles in the same lane. If the traffic jam assist system cannot reduce the vehicle speed timely and effectively, the driver MUST apply the brakes. In congested conditions, should another vehicle cut into the lane being used by the vehicle under traffic jam assist system control, the system may not detect the vehicle in adequate time to make a braking manoeuvre. In this case the brakes should be applied by the driver.

The Traffic Jam Assist system will be impaired or ineffective in the following conditions:

- The hazard lamps are activated;
- The driver indicates in the direction of the lane line about to be crossed;
- The driver applies the accelerator rapidly, carries out an emergency manoeuvre or makes a hard brake pedal application;
- The system detects that the driver has not moved the steering wheel for a preset time period;
- During system intervention, the steering wheel is being manipulated by the driver;
- The lane line is too thin, damaged or fuzzy;
- The vehicle is being driven on a bend with a small curvature radius, the road is too narrow or too wide;
- The vehicle has just entered a road section with lane lines or is being driven on a road section without lane lines;
- The vehicle is not in D ;
- The vehicle changes lanes or sways laterally too fast;
- The turning radius of the car using the traffic jam assist system to track in front is too small;
- The anti-lock brake system (ABS) and the dynamic stability control system (SCS) are activated;
- Faults exist in the anti-lock brake system (ABS), dynamic stability control system (SCS), electric power steering system (EPS), etc.

It is recommended to turn off the traffic jam assist system in the following situations:

- Driving in a sports style or manner;

- Driving in bad weather conditions;
- Driving on rough or poor road surfaces;
- Driving through roadworks or construction sites;
- Driving on steep, winding or slippery roads (such as snow covered and icy roads, wet roads and roads covered with water);
- Driving on grass tracks or unpaved roads.

IMPORTANT
• In cases where the number of lanes increase or lanes merge the driver MUST take full control of the vehicle. • In areas where there are complex traffic conditions such as intersections or road junctions with congestion, the driver MUST take full control. • The driver MUST be aware of the surroundings and be able to assume full control of the vehicle when using the traffic jam assist system to track the car in front should the need arise.

Intelligent Overspeed Warning*

The intelligent speed assist system is an auxiliary function. It may display an incorrect speed limit value or no speed limit value in the instrument pack due to various factors. As a result, the vehicle speed is not restricted within the correct range. The driver still needs to observe the speed limit of the road traffic, and speeding is strictly prohibited.

The front view camera cannot recognise speed limit signs painted on the road surface. The driver MUST observe these speed limits and adjust the their speed accordingly.

The setting interface for the intelligent overspeed warning is in the entertainment display. The driver can operate the intelligent overspeed warning system using the soft switch in this display. The vehicle detects the speed limit sign (such as ⑥⓪) at the roadside with the front view camera. When the vehicle speed exceeds the speed limit indicated by the speed limit sign speed indicator, the indicator flashes accompanied by a warning sound to remind the driver to control the vehicle speed.

The speed limit sign speed indicator illuminates when the intelligent overspeed warning is active. When the vehicle passes the first speed limit sign identified, the speed sign speed indicator displays the real-time speed limit value. If a speed limit sign with the same limit value is detected, the limit value displayed in the speed sign speed indicator remains.

Note: If the vehicle changes lane, makes a turn, turns around in the intersection, or identifies the speed limit cancellation, the original speed limit value on the instrument pack may be reset and displayed as "–" till a new speed limit sign is detected. If the conditions are not met, the original speed limit value will maintain and not be reset. The driver MUST observe the speed limits and adjust the their speed accordingly.

The intelligent overspeed warning system function may be impaired if:

1 The detection performance of front view camera is affected;

2 The vehicle is driven at a high speed;

3 The speed limit signs are obscured by trees at the roadside, ice/frost, snow, dust, etc; or the speed limit signs are placed improperly or damaged;

4 When there are multiple speed limit signs set up over the road or at the roadside, the overspeed warning will be automatically set according to the maximum speed limit value.

5 Non standard speed limit signs or signs that contain additional information.

6 The speed limit signs set up at a fork in the road, on a bend or on-ramp/off-ramp.

7 During manoeuvres such as lane-changing.

IMPORTANT

- The camera may not correctly recognise speed limit signs during poor lighting conditions, bad weather, non-standardized or sheltered speed limit signs or the camera's own restrictions which include the recognition of similar signs (e.g., recognise a weight limit sign as a speed limit sign, or recognise a minimum speed sign as the maximum speed sign).
- The camera cannot identify the text provided below the speed limit sign, such as Auxiliary Lane, 100 m Ahead, School Section, 7:00-10:00 , etc. The camera will identify the speed limit sign with text as a normal speed limit sign.
- Some drastic and rapid steering operations of the driver may be judged as changing lane or turning around in the intersection by the system, resulting in the identified speed limit signs being cleared.
- In cases where a speed limit sign contains multiple speed limits. The camera may not identify all the speed limits.

Speed Limit Assistance System*

Speed Limit Assistance System

The speed limit assistance system is only an auxiliary function. In cases where the speed limit sign is not standardized or the front view camera is blocked, the wrong speed limit value or no speed limit value may be displayed on the instrument pack, and the vehicle is not restricted in the correct speed range, so the driver still needs to be responsible for real-time evaluation of the speed limit on the road.

The front view camera cannot recognise speed limit signs painted on the road surface. The driver MUST observe these speed limits and adjust the their speed accordingly.

The setting interface of the speed limit assistance system is located in the entertainment display. Enter the Vehicle Settings - Speed Limit Assistance System interface to select from the following modes: Smart, Manual and Off.

1 Smart: i.e. smart speed limit. The vehicle detects the speed limit sign (such as 60) at the roadside with the front view camera, and intervenes using the speed control to keep the vehicle speed in the permitted maximum speed limit;

2 Manual : i.e. manual speed limit. The driver sets the maximum speed with the button on the left side of the steering wheel and uses the speed control system to keep the speed in the permitted maximum speed limit. Refer to “Speed Settings of Manual Speed Limit” for the description;

3 Off: Turn off the speed limit assistance system.

Note: If the mode selection cannot be performed, please confirm that the cruise function in the entertainment display is OFF and try again.

Speed Settings of Manual Speed Limit

After the manual speed limit function is enabled, the speed limit can be set by using the button on the left side of the steering wheel, as follows:

1

The manual speed limit function enters Standby state after it is enabled, the indicator lamp of the speed limit assistance system in the instrument pack illuminates in white. Press the Pilot switch (2) to activate the manual speed limit function the indicator lamp of the speed limit assistance system illuminates green. After the first press of the Pilot switch, if the actual speed is below 20 mph(30 km/h), the target speed limit value displayed on the speed limit assistance system indicator is 30 km/h; if the actual speed is above 20 mph(30 km/h), the current speed is rounded up to the nearest multiple of 5 as the target speed limit value. Move the speed adjustment knob (1) upward/downward to change the target speed limit value of the manual speed limit. The target speed limit value will be increased/decreased by 5 mph(5 km/h) every time the adjustment control is moved upwards/downwards. The speed limit value will change continuously by 5 mph(5 km/h) when the adjustment control is moved upwards/downwards and held.

2 With the manual speed limit activated, the system will limit the vehicle speed within the target limit speed; if the vehicle speed is greater than the driver inputted target speed, the system will gradually slow the vehicle to below the inputted target limit value.

3 After the manual speed limit is activated, the driver can briefly press the Pilot switch (2 in the figure below) to reinstate the system to the Standby state. Press the Pilot switch (2 in the figure below) again to restore the manual speed limit function.

4 Fully apply the accelerator pedal to temporarily exceed the speed limit value when the manual speed limit is active. At this time, the indicator lamp of speed limit assistance system in the instrument illuminates in green and flashes accompanied by an audible alarm.

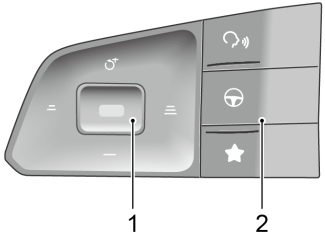

1 Adjustment Knob

2 Pilot Switch

The state indicator for the speed limit assistance system illuminates in green when the smart speed limit is enabled. When the vehicle passes the first speed limit sign identified, the speed sign speed indicator displays the real-time speed limit value. If a speed limit sign with the same limit value is detected, the limit value displayed in the speed sign speed indicator remains.

Note: If the vehicle changes lane, makes a turn, turns around in the intersection, or identifies the speed limit cancellation, the original speed limit value on the instrument pack may be reset and displayed as "–" till a new speed limit sign is detected. If the conditions are not met, the original speed limit value will remain and not be reset. The driver MUST observe the speed limitsand adjust the their speed accordingly.

The driver can temporarily exit the speed limit assistance system by the following operations:

1 Fully apply the accelerator pedal to temporarily exceed the speed limit value. At this time, the indicator lamp of speed limit assistance system in the instrument pack illuminates in green and flashes accompanied by an audible alarm;

2 Briefly pressing the Pilot switch (2 in the figure above) can temporarily exit the speed limit assistance system functions. In this case, the indicator lamp of the speed limit assistance system in the instrument changes into white (into dark colour in daylight mode); press the Pilot switch again to resume the speed limit assistance system functions.

The smart speed limit may may be impaired if:

1 The detection performance of front view camera is affected;

2 The vehicle is driven at a high speed;

3 The speed limit signs are obscured by trees at the roadside, ice/frost, snows, dust, etc; or the speed limit signs are placed improperly or damaged;

4 There are multiple speed limit signs set up over the road or at the roadside; Currently, the front view camera can only identify the speed limit signs for the lane the vehicle is being driven in;

5 The speed limit signs set up at the forks in the road, the curves and the on-ramp/off-ramp;

6 Lane change, etc.

IMPORTANT

- The camera may not correctly recognise speed limit signs during poor lighting conditions, bad weather, non-standardized or sheltered speed limit signs or the camera's own restrictions which include the recognition of similar signs (e.g., recognise a weight limit sign as a speed limit sign, or recognise a minimum speed sign as the maximum speed sign).
- The camera cannot identify the text provided below the speed limit sign, such as Auxiliary Lane, 100 m Ahead, School Section, 7:00-10:00 , etc. The camera will identify the speed limit sign with text as a normal speed limit sign.
- Some drastic and rapid steering operations of the driver may be judged as changing lane or turning around in the intersection by the system, resulting in the identified speed limit signs being cleared.
- In cases where a speed limit sign contains multiple speed limits. The camera may not identify all the speed limits.

Lane Departure Assist

The lane departure assist system is an auxiliary system, which can provide assistance to the driver. It does NOT remove the responsibility of safe driving from the driver. When choosing to use the lane keeping assist system, the driver MUST always pay attention to the surroundings, hold the steering wheel and be prepared to make manoeuvres at any time. Failure to maintain overall control of the vehicle may result in an accident or personal injury.

The lane departure assist system does not always recognise the lane lines or kerbs. Sometimes poor road surfaces, certain road structures or objects may be mistaken for lane lines or kerbs. When such situations occur, the lane departure assist system must be turned off immediately.

The lane departure assist system switch is located on the entertainment display. The system can be turned on/off in the appropriate Intelligent Driver Assistance interface, and the mode can be selected.

Alert

The system detects the lane lines ahead when the following detection conditions are met:

- The function is in ON state;
- The vehicle speed is above 37 mph (60 km/h);
- The lane lines are clear, and the system detects at least one lane line;

When the wheel is about to cross the lane line or has already crossed the lane line, the system will give warnings to remind the driver to take action and correct the direction in time to keep the vehicle running within the lane lines. The function will exit when the speed is less than 33 mph (55 km/h).

Assist

The system uses the front view camera to detect the lane lines ahead of the vehicle. The system will be activated when the following detection conditions are met:

- The function is switched ON.

- Vehicle speed is above 37 mph (60 km/h).
- Lane line markings are clear and the system recognises at least one lane line.

When a wheel is about to cross the lane line, or has already crossed the line, the system will provide assistance to the driver by keeping the vehicle in between the lane lines by applying corrective steering intervention and simultaneously displaying a prompt. The function will automatically exit when the vehicle speed drops below 33 mph (55 km/h).

Emergency Lane Keeping (ELK)

The system uses the front view camera to detect lane lines, kerb and adjacent lanes of oncoming traffic ahead. The system will be activated when the following detection conditions are met:

- The function is switched ON.
- Vehicle speed is above 37 mph (60 km/h).
- Lane line markings are clear and the system recognises at least one lane line.

When a wheel is about to cross the lane line or kerb, or the vehicle is approaching oncoming traffic in the adjacent lane, and there is the possibility of a collision, the system will provide assistance to the driver by keeping the vehicle in between the lane lines or kerbs, or applying a sharp steering intervention and simultaneously displaying a prompt. The function will automatically exit when the vehicle speed drops below 33 mph(55 km/h).

In cases of several interventions within a certain period of time and in the absence of detecting any steering input by the driver during the interventions, the system will provide warnings.

IMPORTANT
• In cases where the number of lanes increase or lanes merge, the driver MUST take full control of the vehicle. • In areas where there are complex traffic conditions such as intersections or road junctions with congestion, the driver MUST take full control of the vehicle.

The lane departure assist system will be impaired or ineffective in the following conditions:

- The driver indicates in the direction of the lane line about to be crossed.
- The hazard lamps are activated.
- The driver applies the accelerator rapidly, carries out an emergency manoeuvre or makes a hard brake pedal application.
- The system detects that the driver has not moved the steering wheel for a preset time period (in the mode of assist or emergency lane keeping).
- During system intervention the steering wheel is operated (in the mode of assist or emergency lane keeping).
- The lane line is too thin, damaged, or unclear.
- Irregular or damaged kerbs.
- The vehicle is driven on the bend with a small curvature radius, the road is too narrow or too wide.
- The vehicle has just entered a road section with lane lines or is driven on a road section without lane lines.
- The vehicle changes lanes or sways laterally too fast.
- The vehicle is not in D.
- The vehicle speed is below 33 mph (55 km/h), or too high.
- The anti-lock brake system (ABS) and the dynamic stability control system (SCS) are activated.
- Faults exist in the anti-lock brake system (ABS), dynamic stability control system (SCS), electric power steering system (EPS), etc.

It is recommended to turn off the lane assist system in the following situations:

- Driving in a sports style or manner.
- Driving in bad weather conditions.
- Driving on a poor road surface.
- Driving through roadworks or construction sites.

Front Collision Assist (FCA)

The driver remains responsible for the safety of the entire driving process, even if the vehicle is equipped with a forward collision system. The driver MUST pay full attention and drive carefully. As with all the driver assist systems, the forward collision system cannot prevent accidents or avoid collisions in all situations. The driver MUST always remain in control to avoid accidents or emergency situations.

Emergency braking whilst under the control of forward collision system may cause injuries to the passengers. Therefore, drive carefully and all passengers MUST wear seat belts at all times.

Ensure that the forward collision system or ignition/vehicle power system is switched off when being towed. If the forward collision system is enabled when the vehicle is being towed, adverse effects may affect the safety of your vehicle, the towing vehicle and the people around.

To avoid the occurrence of accidents, never specially test the functions of forward collision system.

The front collision assist switch is located on the infotainment display. Enter the corresponding interface for driving assistance to turn the system ON/OFF, and make mode selection.

Alerm

When the system detects that there is a risk of collision between the vehicle and the vehicle in front in the same lane, warnings will be provided to prompt the driver to slow down in time and maintain a relatively safe distance from the vehicle ahead.

Auto Emergency Braking

When the system detects that there is a risk of collision between the vehicle and the vehicle directly in front of the vehicle, the brake system will automatically intervene to decelerate the vehicle, so as to avoid collision accidents or mitigate damage from collision accidents. If the vehicle is braked and stopped under the system control, it will remain stationary for a short time. Full control of the vehicle will then be returned to the driver.

The system will only slow the vehicle down automatically if the following conditions are met:

- The dynamic stability control system (SCS) and traction control system (TCS) are fault-free and ON.
- The vehicle is in D or N.
- The airbags are not deployed.

Note: In some cases, the driver may not have anticipated any braking intervention and does not want to apply the brakes whilst the front collision assist is braking heavily, the driver can temporarily cancel this operation by heavily pressing the accelerator pedal after ensuring that it is safe to do so.

The front collision assist system operation may be impaired if:

- The vehicle ahead approaches head-on, crosses the intersection or jumps the queue rapidly in a short distance;
- The vehicle ahead does not follow the rules of driving and parking (such as drives on the lane lines);
- The vehicle ahead is not in the same lane as your vehicle or the vehicle ahead is partially obscured;
- The vehicle ahead is an abnormal vehicle (modified or abnormal shape);
- The vehicle ahead is a vehicle with higher chassis;
- The vehicle ahead is a large vehicle at close range (such as tractor, trailer, towing vehicle etc.);
- The vehicle ahead is unusual transportation (such as a horse, cart, carriages etc.);
- The system detects the side of a vehicle;
- The contour of the vehicle ahead is unclear (such as water being sprayed by the wheels of the front and surrounding vehicles);
- The vehicle ahead does not have or has obscured tail lamps when driving at night or in a tunnel;

- The tail lamps of the vehicle ahead are all LED strip lights or other homemade coloured lamps;
- The street lights are inconsistent or flickering when driving at night;
- The pedestrian is not directly in front of the vehicle, or the pedestrian is not fully visible;
- The pedestrian is not standing upright, or it is a child under a certain height;
- There is a group of pedestrians in front of the vehicle that is over-shadowed or in the dark;
- There are animals in front of the vehicle;
- Objects such as special-shaped ground obstacles (e.g. roadblocks, isolation piles, isolation strips, large stones, other scattered objects etc.) are detected in front of the vehicle;
- Objects such as signs, guardrails, bridges, buildings or other are detected in front of the vehicle;
- The vehicle is being driven on a hillside road, upper and lower bridge section or tight bends;
- The vehicle is in R;
- The vehicle is in a state of braking or rapid acceleration.

Ultrasonic Sensor Parking Aid

The purpose of the parking assist system is only to assist the driver during parking! The ultrasonic sensors may not be able to detect certain types of obstruction, e.g. narrow posts, small objects close to the ground, objects above the tailgate and some objects with nonreflective surfaces.

Keep the ultrasonic sensors free of dirt, ice and snow. If deposits build up on the surface of an ultrasonic sensor, its performance may be impaired. When washing the car, avoid aiming high pressure water jets directly at the ultrasonic sensors from close range.

Rear Parking Aid

The ultrasonic sensors on the rear bumper monitor the area behind the vehicle to search for obstacles. If an obstacle is detected, the system will calculate its distance from the rear of the vehicle and communicates the message to the driver by sounding warning chimes.

Note: The PDC system and rearward driver assistance system are unavailable when the tow mode is enabled.

Parking Aid Operation

Rear Parking Aid

The rear parking aid is enabled automatically when the R gear is selected; and when it is moved out of the R gear, the system will be immediately shut off. A short beep is given by the parking aid after selecting R gear to indicate that the system is operating normally. If an obstacle is detected at the rear, the system will prompt the driver with warning alarms.

Note: If a longer, higher pitched sound is emitted for 3 seconds when the R gear is selected, this indicates a fault in the system. In this case seek assistance from an MG Authorised Repairer.

Rear Parking Aid

With the parking aid function enabled, if an obstacle is detected, the audible sounds in different frequencies are transmitted (there might be blind zones).

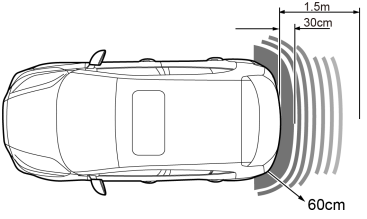

- If an obstacle is located within 1.5 m range of the rear or within 0.6 m range of the corner, the warning sound commences. As the car moves closer to the obstacle, the warning sounds are transmitted more rapidly.
- Once the obstacle is within 0.3 m range of the rear bumper, the warning sounds will merge into a continuous warning.

Parking Camera*

The parking camera system only serves as an auxiliary function when parking the vehicle! The camera's field of view is limited and cannot detect obstacles outside the field of view.

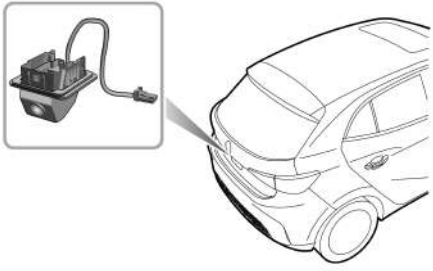

Some models feature a rear parking camera fitted between the rear license plate lamps.

When R gear is selected, the camera will provide an image of what is immediately behind the vehicle. This image will be shown on the entertainment display.

360 Around View Monitor System*

The purpose of the 360 around view system is to assist the driver during parking! The cameras have a limited field of view and cannot detect obstructions outside the field of view.

Although the infotainment display can provide images around the vehicle, please still pay attention to the current actual road conditions for your driving safety.

With the 360 around view system working, the entertainment display interface will show a 360 around view of the vehicle to facilitate the observation of surrounding environment and make the driving environment much safer. You can touch buttons on the display to view images from different perspectives around the vehicle.

You can enter the 360 around view system using the following operations:

- Select R gear.
- Click 360 icon.
- Using the 'Setting' interface to select low speed switching of corner lights/indicators, this will automatically open the 360 around view system when the indicators are used at low speeds and exit when the indicators are cancelled.
- After setting the shortcut button on the steering wheel to 360 function, press this button.

In the 360 around view system display interface, select the settings icon to enable personal settings for system functions.

Note: When the shift control knob is placed in D , the 360 around view system is inhibited at speeds above or equal to 20 mph/ (35 km/h)

Indirect Driver Fatigue Monitoring System

The driver should always ensure that their physical state is suitable for driving, even if the vehicle is equipped with an indirect driver fatigue reminder system. NEVER drive the vehicle when fatigued.

The indirect driver fatigue reminder system cannot always identify the driver's fatigue level accurately. It calculates the fatigue level through the driver's operational control status instead of monitoring the driver's actual physical characteristics such as distraction, it cannot provide an emergency reminder to the driver who has just become fatigued.

The driver attention warning system calculates the driver's fatigue level by comparing information such as vehicle speed and steering wheel angle with basic data obtained based on mass data statistics. The system will constantly compare the calculated fatigue level with the current operational state of the driver. If the system recognizes that the driver is becoming fatigued, a warning will be issued.

When the indirect driver fatigue reminder system is active, the vehicle speed is over 37 mph (60 km/h). When the driver performs any of the following operations, system operation will be suspended and it will stop monitoring the driver's fatigue level:

1 The driver removes the seat belt and opens the driver door;

2 The stop time exceeds 15 minutes;

3 The ignition or power system is turned off.

System Settings

After the vehicle is started, the indirect driver fatigue reminder system is enabled by default, it can be turned off/on and the sensitivity set in the entertainment display screen.

Note: The indirect driver fatigue reminder system is not easily triggered if the vehicle is passing through low-quality road sections, continuous bends, or sections with large amounts of traffic lights.

Emergency Information

Hazard Warning Devices *248*

Emergency Starting *249*

Emergency Call *252*

Vehicle Recovery *254*

Tyre Repair and Tyre Replace *258*

Hazard Warning Devices

Warning Triangle

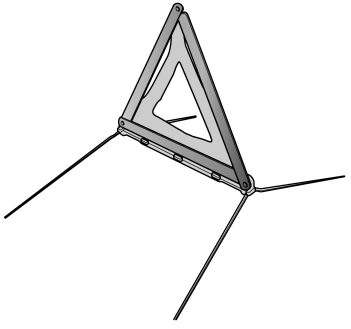

The warning triangle is stowed in the trunk.

If you have to stop your car on the road in an emergency, you must place a warning triangle approximately 50 ~ 150 metres behind the car, if possible, and press the hazard warning lamp button to warn other road users of your position.

Emergency Starting

NEVER attempt to power the vehicle by pushing or towing.

Make sure that both batteries are of the same rated voltage (12 volts), and that the booster cables are approved for use with 12 volt car batteries.

Ensure sparks and open flames are kept well away from the front compartment.

Ensure that booster cables are firmly connected and do not touch each other or other moving parts, otherwise, sparks may be caused, resulting in fire or explosion.

In case of low battery, the vehicle can be started by using a booster cable to connect the battery of another vehicle or to connect the battery externally.

For models with batteries in the loadspace, where it is possible to open the tailgate of the disabled vehicle (B), please always give priority to the positive terminal as the positive connecting point. If the tailgate cannot be opened, please open the front compartment fuse-box. The terminal shown in figure below can be used as the positive connecting point.

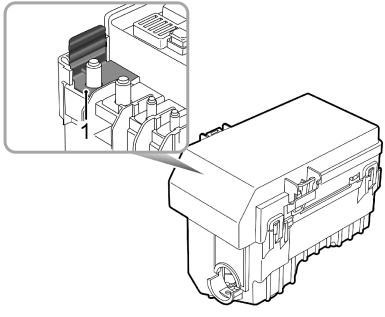

1 Positive Connecting Point

Turn off the vehicle power and all electrical appliances of the vehicle, then follow the instructions below:

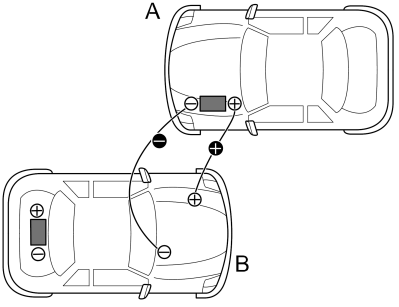

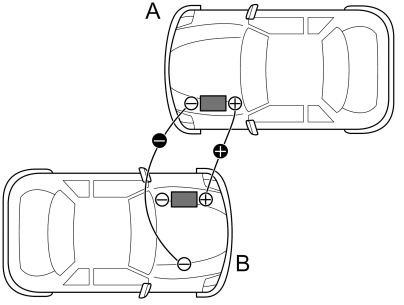

1 Connect the red booster cable from the positive (+) terminal of the donor battery (A) to positive connecting point on the disabled vehicle (B) . Connect the black booster cable from the negative (-) terminal of the donor battery (A) to a good earth point (The following figure) on the disabled vehicle (B), and try to keep it well away from the battery and bypass the fuel and brake lines.

2 Start the donor vehicle and allow it to idle for several minutes.

3 Start the disabled vehicle. If the disabled vehicle will not start after several attempts, it may need to be repaired. Please contact an MG Authorised Repairer for assistance..

4 After both vehicles have started normally, turn off the donor vehicle power.

5 Disconnect the booster cables. Disconnecting the booster cables must be an exact reversal of the procedure used to connect them, i.e. disconnect the BLACK negative cable from the earth point on the disabled vehicle FIRST.

IMPORTANT
DO NOT switch on any electrical appliance in the disabled vehicle until the booster cables have been disconnected.

Note: It is recommended to turn off the lights, air conditioner and other comfort appliances after starting the vehicle with power loss, and keep the vehicle running for 1~2 hours to restore the battery power. If the battery is fully charged, the vehicle still cannot be normally started, please contact an MG Authorised Repairer for service.

Note: If the vehicle still cannot be started by connecting the booster cables, please consult an MG Authorised Repairer for service.

Emergency Call

In an accident, your vehicle's eCall – SOS Emergency Assistance can either be triggered manually or in severe cases automatically upon detection by vehicle's sensors. The eCall service is a public service of general interest and is accessible free of charge. The emergency call centre will establish verbal communication with the vehicle occupants in order to understand the extent of the emergency and the level of assistance required. Attempt to send the following vehicle information message to the emergency call centre. The appropriate emergency services will be deployed to the vehicle's current location if known.

- Current time, location and direction of travel
- Vehicle Type
- Vehicle Identification Number (VIN)
- Whether the call was automatically or manually initiated
- Vehicle Category

This system will ensure that your personal data is securely protected. It is designed to ensure that it is not traceable and other external systems are not able to gain access. When the eCall triggers, the system will only transmit the data information to the relevant public safety answering points designated by the respective public authorities of the country on which territory they are located, which will receive and process your emergency call request. The system will retain data locally for 13 hours after triggering.

You have the right to access the data information stored in this system, and to request the rectification, erasure or blocking of data information that does not meet the requirements of the regulations. If you think your personal data is infringed, you have the right to complain to the competent data protection authority.

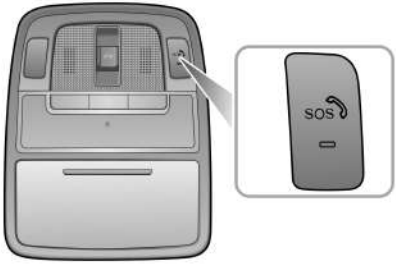

For manual activation, press and release the SOS button in the overhead console for about 1 second to activate an emergency services call. A single beep will be heard when the eCall is triggered and a message will be displayed on the vehicle's message centre and entertainment player. The entertainment player will be muted whilst the emergency services call is active. Manually triggered emergency services calls may be cancelled by pressing and releasing the SOS button again within about 5 seconds of the initial press, and the messages will be removed.

The emergency services call (eCall) system will perform a self-test when the vehicle is powered ON. During a Self-Test the emergency services call (eCall) LED status indicator on the SOS button will flash quickly until completion. The LED status indicator will illuminate permenantly if no system faults are present. The LED status indicator will be extinguished or flash slowly if a fault is detected. Faults detected during the self-test will be displayed on the vehicles message centre.

Note: The operation of eCall - SOS Emergency Assistance relies on cellular coverage and may be affected by signal outages or low signal strength.

Vehicle Recovery

Towing Vehicle

Do not tow the vehicle with any of the driven wheels in contact with the road surface, this will avoid electric drive transmission damage. When it is necessary to temporarily push or tow the vehicle from a dangerous situation or onto the transporter, the speed must remain below 3 mph (5 km/h) and be completed with in 3 minutes.

When pushing or towing the vehicle for temporary situation, the driver's side seat belt should be inserted into the lock and maintained in the inserted state, the transmission placed inNeutral and the parking brake must be OFF, otherwise the vehicle may be damaged.

Towing Hook

Do not use a tow rope that is twisted, the towing eye may become unscrewed.

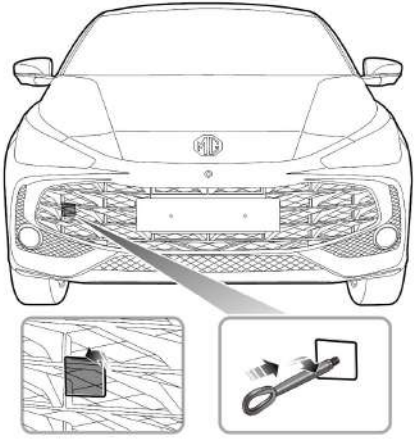

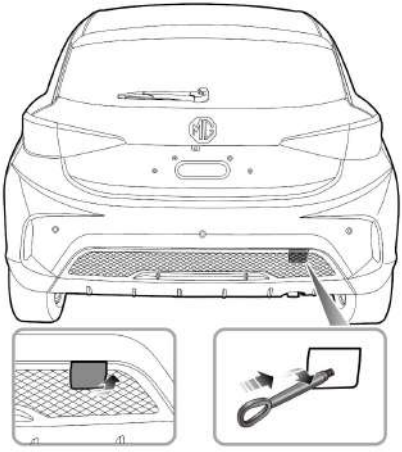

The towing hook is in the tool kit. The tool kit is placed beneath the loadspace carpet. To fit the towing hook, remove the smallcover set into the bumper, first press one end of the small cover plate, then open the small cover plate after the other endis lifted, then screw in the towing hook via the small hole into the threaded hole in the bumper beam (see illustration). Ensure the towing hook is fully tightened!

Note: The removable cover is secured to the bumper by a plastic cord.

Both towing points are intended for use by qualified recovery specialists to assist in the recovery of your vehicle when a breakdown or accident occurs. They are NOT designed for towing other vehicles. The vehicle can be towed using a tow rope but a towing bar is recommended.

Towing for Recovery

When towing, DO NOT accelerate or brake suddenly, this can cause accidents.

Suspended Towing

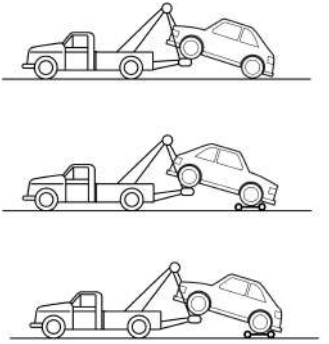

Suspended towing is the best method for recovering a vehicle that needs to be towed. The drive wheels must be suspended above the ground, or the transmission may be damaged. Ensure the hazard lamp is on and no passenger is in the vehicle. Please release the EPB if the vehicle is towed with rear wheels on the ground.

Towing Vehicle

If your vehicle needs to be transported, a special transporter is recommended. Secure the vehicle on the transporter as follows:

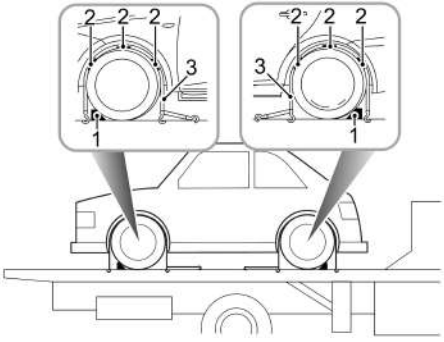

1 Apply the parking brake and engage in P gear.

2 Fit wheel chocks (1) as shown, then position the anti slip rubber blocks (2) around the circumference of the tyre.

3 Fit the lashing straps (3) around the wheels and secure to the trailer. Tighten the straps until the vehicle is securely held.

Tyre Repair and Tyre Replace

Tyre repair tool*

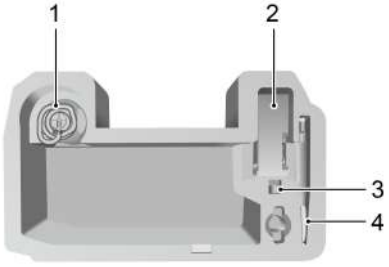

1 Repair Fluid
2 Electric Air Pump
3 Wheel Bolt Cap Removal Tool
4 Towing Hook

Tyre Repair*

1 Remove the label at the bottom of the repair fluid reservoir and attach it to the steering wheel to remind the driver not to exceed 50 mph (80 km/h).

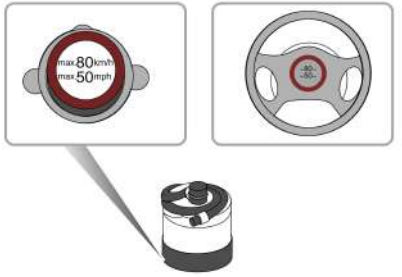

2 Connect the air hose of the electric air pump to the repair fluid reservoir. Invert the repair fluid reservoir into the slot of the electric air pump. Remove the valve dust cap of the damaged tyre, and connect the hose connector of the repair fluid reservoir to the tyre valve. Ensure that the power switch of the electric air

pump is switched off (i.e., press " o "), then connect the electric air pump plug to 12 V power socket, and turn on the vehicle power system.

Note: To avoid battery overdischarge, please start the vehicle.

3 Switch on the power switch of the electric air pump (i.e., press " - "), to start pumping sealant into the tyre. The repair fluid reservoir will become empty after approximately 30 seconds. The tyre should reach the specified pressure within 5 or 10 minutes.

Note: When the pressure gauge of the air pump starts to work, it may briefly indicate up to 600 kPa (i.e. 6 bar), then the pressure returns to normal.

4 When the required pressure is reached, switch off the electric air pump (i.e., press " o ").

Note: If the tire does not reach the specified pressure within 10 minutes, disassemble the tire repair assembly and move the vehicle for a distance equal to one turn of the tire before inflating. If the tire still fails to reach the specified pressure, it indicates that the tire has been seriously damaged and cannot be repaired. Please contact the local authorized after-sales service center for repair.
Note: Consecutive operation of electric air pump for more than 10 minutes may result in damage to the compressor.

5 Remove the tyre sealant bottle from the slot, and disconnect the hose of the tyre sealant bottle from the tyre valve. Then remove the plug of the electric air pump from the centre console power socket, return the tyre repair kit to its stowage tray.

6 After successfully adding sealant to the tyre, drive immediately for a short time (around one minute).This

will allow the sealant to distribute evenly inside the tyre. Continue driving and do not exceed 50 mph (80 km/h).After a further 10 minutes, find a safe place to stop and recheck the tyre pressure.

Please follow different guidelines based on the tyre pressure measured:

If the tyre pressure has dropped to less than 80 kPa (0.8 bar), do not continue driving, seek assistanceinstead.

If the tyre pressure is between 80 kPa (0.8 bar) and the specified pressure, connect the hose of the electricair pump to the tyre value, and inflate the tyre until itreaches the specified pressure. Repeat Step 6 .

If the tyre pressure has not dropped, you may continue driving, but the vehicle speed must not exceed 50 mph (80 km/h), and the driving mileage must not exceed 120 miles (200 km).

Note: DO NOT remove foreign objects (eg. screws, nails etc) from the tyre. The tyre repair system must only be used when the foreign object is in the tread pattern (A), DO NOT attempt a repair when the damage is in the sidewall of the tyre (B).

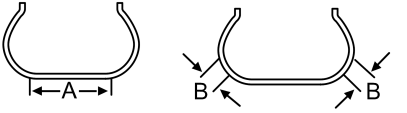

Spare Wheel and Tools*

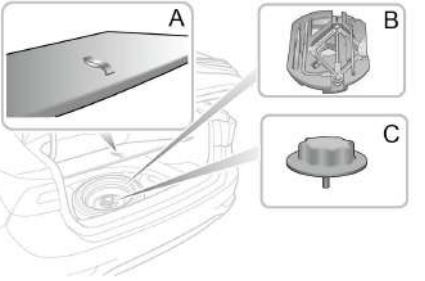

The spare wheel and tools can be removed as follows:

Note: The vehicle is equipped with spacesaver spare wheel.

1 Lift the carpet in the trunk with the lifting strap (A).

2 Take out jack etc. from the carpet support plate.

3 Unscrew the spare wheel retaining bolt (B), and take out the spare wheel from the trunk.

Spare Wheel Replacement Tool*

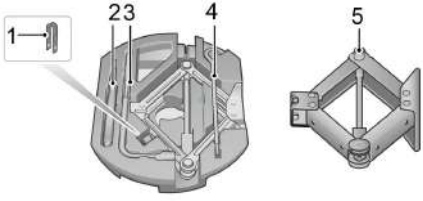

1 Wheel bolt cap removal tool

2 Towing hook

3 Wheel bolt spanner

4 Jack handle

5 Jack

Wheel Replacement*

If you need to change the wheel during the journey, choose a safe place to stop away from the main road if possible. Always ask your passengers to get out of the car and wait in a safe area away from other traffic.

Switch on hazard warning lamps. If available, position a warning triangle about 50 ~ 150 metres behind your vehicle to warn approaching traffic.

Before changing a wheel, ensure the front wheels are in the straight ahead position. Apply the parking brake and place the shift lever in N position (MT) or P position (AT). Place the Start switch in OFF position.

Positioning the Jack

DO NOT work underneath the car with a wheel changing jack as the only means of support. The jack is designed for wheel changing only!

NEVER jack the car using any positions other than the jacking points, otherwise serious damage may be caused.

Position the jack on firm level ground under the jacking point nearest the wheel to be removed. Turning the jack screw handle by hand, adjust the jack until the jack head fits snugly onto the flanging of the body.

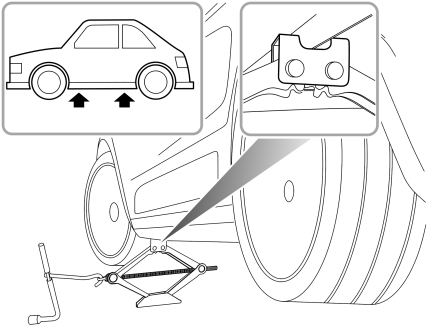

Ensure that the base of the jack is in full contact with the level ground.

IMPORTANT
• Ensure the jack is positioned on firm, level ground. • If the vehicle must be parked on the hill, place chocks in front of and behind other 3 wheels to prevent the vehicle moving.

Fitting the Spare Wheel

Regularly check the spare wheel tyre pressure, it may be under pressure due to being unused for long periods of time. Always check the tyre pressure after changing a wheel.

The wheel bolts must be tightened to the specified torque after changing a wheel (120 ~130 Nm).

1 Before raising the car, use the vehicle tool to remove each wheel bolt cap. Use the wheel bolt spanner to slacken each bolt half a turn anti-clockwise.

2 Turn the handle in a clockwise direction until the tyre is clear of the ground.

Note: For your safety, place the spare tyre under the body flange near the jack, and avoid placing wheels face down on the ground - the surface may be scratched.

3 Remove the wheel bolts and put away to prevent them from being lost. Make sure the vehicle is steady and there is no risk of slip or movement before removing wheel bolts.

4 Pull out the wheel and place it flatwise.

Note: Place the removed wheel under the body flange near the jack, and avoid placing wheels face down on the ground - the surface may be scratched.

5 Fit the spare wheel and tighten the wheel bolts until the wheel is seated firmly against the hub.

6 Lower the vehicle and remove the jack, then FULLY tighten the wheel bolts in a diagonal sequence.

7 Place the tools back, and put the replaced wheel into the trunk in place.

Note: DO NOT stand on the handle of the wheel bolt spanner or use extension tube on the handle of the spanner.

Note: When replacing the wheel, please fully tighten the bolts in the diagonal sequence twice.

Note: Consult an MG Authorised Repairer or tyre specialist for a replacement tyre as soon as possible.

Spacesaver Spare Wheel

Only one spacesaver spare wheel can be used at any one time, otherwise the operational performance and brake performance may be reduced, thereby leading to accident or injury to yourself and others.

When driving on snow covered or icy roads, it is advised to fit the spacesaver wheel to the rear wheels of the vehicle to maintain adequate stability. If the front wheel tyre is damaged, a rear wheel should be moved to the position of a front wheel, and then fit the spacesaver spare wheel in the position of the rear wheel.

Snow chains can not be used on the spacesaver spare wheel, this can cause damage to the car and snow chain.

When the spacesaver spare wheel is fitted, drive the car with care, and the speed should not exceed 80 km/h. Please have the full-scale tyre repaired and replace the

spare wheel as soon as possible. This will extend the life span of the spare wheel for other emergencies.

Note: DO NOT use an automatic car wash when the spacesaver wheel is fitted, the guide rails of the car wash may conflict with the wheel/tyre and cause damage.

Maintenance

Maintenance Instructions 268
*High Voltage Battery Pack** 272
Bonnet 274
Engine Compartment 276
Engine Oil 278
Catalytic Converter 281
Cooling System 283
Brake 285
Fuse Replacement 288
12V Battery 295
Bulb Replacement 298
Washer 308
Wipers 310
Tyre 313
Cleaning and Caring 319

Maintenance Instructions

Regular Maintenance

The safety, reliability and performance of your vehicle will depend partly on how well it is maintained. You must ensure that maintenance is carried out when required and according to the information contained in the Warranty and Maintenance Handbook.

Servicing

For next service information, please refer to "Message Centre" in "Instruments and Controls" section or information related to the entertainment system. After the completion of each service, the next service display will be reset by your MG Authorised Repairer.

Note: If the maintenance is not carried out (or the display is not reset by an MG Authorised Repairer after maintenance), the maintenance display will not be able to provide correct information.

Service History

After each service, always ask your MG Authorised Dealer to register the service.

Fluid

Only use fluids recommended and certified by MG Motor. Refer to "Recommended Fluids and Capacities" in the "Technical Data" section.

IMPORTANT
Using fluids or additives not recommended for this vehicle may damage the components or devices; please consult an MG Authorised Repairer for details.

Emission Control

Your car is fitted with exhaust emission and evaporative control equipment designed to meet specific territorial and legal requirements. Incorrect engine settings may adversely affect exhaust emissions, engine performance and fuel consumption, as well as cause high temperatures, which could result in damage to the catalytic converters and engine.

IMPORTANT
You should be aware that unauthorized replacement,modification or tampering with this equipment by an owner or motor vehicle repairer could result in the manufacturer's warranty being deemed as invalid. In addition, no adjustment should be made to the engine settings. Otherwise, the vehicle emission indexes could be affected.

Owner Maintenance

Any significant or sudden drop in fluid levels, or uneven tyre wear, should be reported without delay to an MG Authorised Repairer.

In addition to the routine servicing referred to previously, some simple checks must be carried out more frequently.

Daily Check

- Operation of lights, horn, wipers, washers and warning lights.
- Operation of seat belts and brakes.
- Look for fluid deposits underneath the car that might indicate a leak.
- Check tyre appearance.

Weekly Check

- Engine oil level.
- Coolant level.
- Brake fluid level.
- Windscreen washer fluid level.
- Tyre pressure.
- Operate air conditioning.

Note: The engine oil level should be checked more frequently if the car is driven for prolonged periods at high speeds.

Special Operating Conditions

If your vehicle is frequently used in dusty conditions, or operated in extreme climates where sub-zero or very high ambient temperatures are normal, more frequent attention may need to be paid to maintenance requirements. You need to carry out special maintenance operations (refer to Warranty and Maintenance Handbook) or contact an MG Authorised Repairer.

Safety in the Garage

Cooling fans may commence operating after the engine is switched off, and continue operating for a number of minutes. Keep clear of all fans while working in the engine compartment.

If you need to carry out maintenance, observe the following safety precautions at all times:

- Keep your hands and clothing away from drive belts and pulleys.
- If the car has been driven recently, DO NOT TOUCH exhaust and cooling system components until the engine has cooled.
- DO NOT TOUCH electrical leads or components while the engine is running, or with the Start switch on.
- NEVER leave the engine running in an unventilated area - poisonous exhaust gases are extremely dangerous.
- DO NOT work underneath the vehicle with a jack as the means of support.
- Ensure that sparks and naked lights are far away from the engine compartment.
- Wear protective clothing and work gloves.
- Remove watches and jewelry before working in the engine compartment.
- DO NOT allow tools or metal parts of the vehicle to make contact with the battery leads or terminals.

Toxic Fluids

Fluids used in motor vehicles are poisonous and should not be consumed or brought into contact with open wounds. These include: battery acid, coolant, brake fluid, fuel, engine oil and windscreen washer fluid.

For your own safety, ALWAYS read and obey all instructions on labels and containers.

Used Engine Oil

Prolonged contact with engine oil may cause serious skin disorders such as dermatitis and cancer of the skin. Wash thoroughly after contact. Used engine oil should be disposed of correctly. Incorrect disposal can cause a threat to the environment.

High Voltage Battery Pack*

Precautions and restricted conditions for use of battery

If the vehicle is not going to be used, parked, or stored for a long time it is necessary to use the vehicle at least once every two months for more than 30 minutes each time (the power of high-voltage battery pack shall be maintained at 50% charge (or 4 gauge blocks) or more). It is strictly prohibited to park or store a vehicle fitted with a high-voltage battery pack for more than 7 days if the power of the high-voltage battery pack is low, failure to follow these guidelines may effect the high voltage battery warranty.

DO NOT attempt to dismantle the battery pack or any High Voltage components - THESE ARE DANGEROUS. Any signs of dismantling or damage caused by attempts to dismantle will invalidate the warranty.

1 DO NOT park the vehicle in conditions where the ambient temperature exceeds 45℃ for more than 15 days. This will effect the performance and service life of the high voltage battery.

2 In order to better extend the service life of the high-voltage battery pack, it is recommended to use the vehicle at least once a month for more than 30 minutes each time to facilitate the vehicle to charge and maintain the high-voltage battery pack.

3 When the vehicle is used for the first time or after a long period of storage, the SOC displayed in the instrument pack may not be accurate. It is recommended to drive at a low speed of 19~30 mph (30~50 km/h) for 20~30 minutes before normal use.

4 The cooling system of high-voltage battery pack is equipped with air filter element, please replace it as per manufacturers maintenance schedule.

5 In the event of an accident, damage to the high voltage battery or any of its related components, or any repairs made to the high voltage system the car must be inspected by qualified personel at an MG Authorised Repairer.

6 In the event of any accident or body repairs being required please consult the qualified personnel at an MG Authorised Repairer. The repair may require high voltage battery isolation or specialist HV component removal.

IMPORTANT
Only fully trained and qualified personel are allowed to work on the high voltage systems and components of this vehicle. Any disassembly of such systems or components is strictly prohibited.

Bonnet

Opening the Bonnet

DO NOT drive when the bonnet is not closed or retained only by the safety catch.

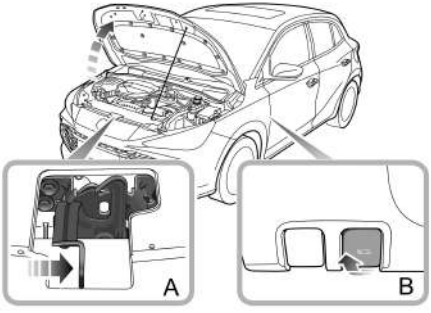

1 Pull the bonnet release handle (B) from the inside of the vehicle.

2 Move the safety catch release handle on the bonnet lock body in the direction of the arrow (A) to release the bonnet safety catch.

3 After unlocking the bonnet, go to the front of the vehicle to lift the bonnet and hold it up with the support rod..

Closing the Bonnet

Support the bonnet using one hand, release the support rod using the other hand, and place it firmly into the support rod base. Hold the bonnet using both hands and lower it. When the bonnet drops for about the last 20 ~ 30 cm, apply a downward force to fully close the bonnet.

By attempting to lift the front edge of the bonnet, check if the lock is fully engaged after closing the bonnet. If it is not fully engaged, you must repeat the operation.

Bonnet Open Alarm

If the bonnet is not fully locked, the corresponding alarm icon will be shown on the message centre display. If it is found that the bonnet is not fully locked while driving, an audible warning will sound.

IMPORTANT
• For safety reasons, the bonnet should always be closed well when driving. Therefore you must check after closing the bonnet that the bonnet is securely latched, e.g. the bonnet edge is flush with the body of the vehicle. • You should stop the vehicle immediately when safety permits and close the bonnet if it is not fully closed when driving. • Beware of hands being pinched while fully closing the bonnet with a downward force.

Engine Compartment

While operating the components in the engine compartment, always observe the safety precautions listed under "Safety in the Garage". Refer to "Maintenance" of this section.

Front cabin - fuel

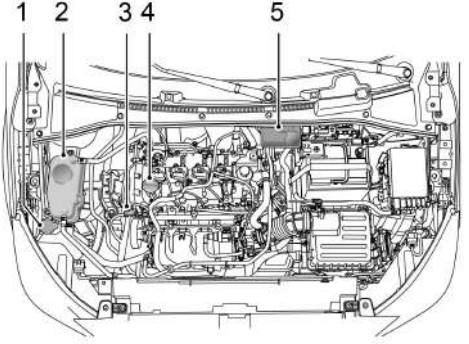

1 Washer Fluid Reservoir (Blue Cap)
2 Engine Coolant Reservoir (Black Cap)
3 Oil Dipstick (Yellow)
4 Oil Filler Cap (Black Cap)
5 Brake Fluid Reservoir (Black Cap)

Front cabin - hybrid

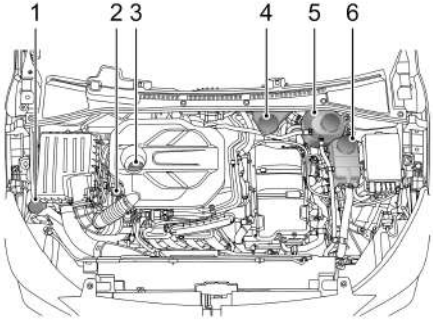

1 Washer Fluid Reservoir (Blue Cap)
2 Oil Dipstick (Yellow)
3 Oil Filler Cap (Black Cap)
4 Brake Fluid Reservoir (Black Cap)
5 Engine Coolant Reservoir (Black Cap)
6 Trasmission Coolant Reservoir (Black Cap)

Engine Oil

Engine Oil

Engine Oil ACEA/API Category

European Automobile Manufacturers' Association (ACEA) and American Petroleum Institute (API) classify the engine oils based on performance and quality. To ensure the best performance of the vehicle, please use 0W-20 engine oil recommended by SAIC Motor that complies with ACEA C5 and API SP specifications. 0W-20 engine oil is suitable for low temperature and normal temperature environments, and is all-purpose engine oil for all seasons.

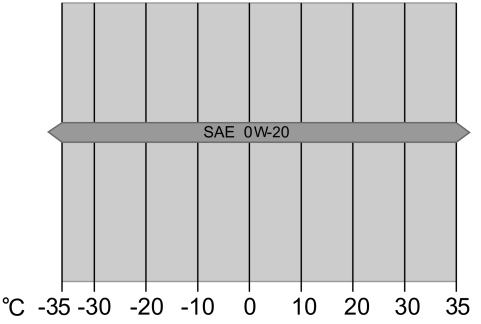

IMPORTANT
Do not allow the engine to run at low coolant temperature for a long time. If you have made several short drives and have not reached normal engine operating temperature each time, please extend the engine running time to bring the engine up to normal operating temperature.

Engine Oil Check and Refill

Driving the vehicle with the engine oil level ABOVE the upper mark, or BELOW the lower mark on the dipstick, will damage the engine.

Do not spill engine oil onto a hot engine, otherwise it may cause fire.

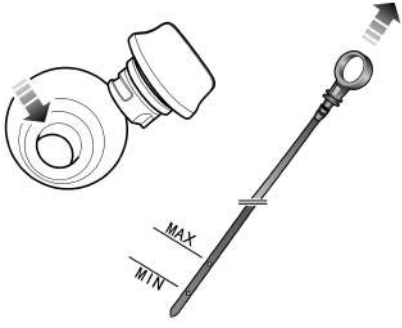

Check the oil level weekly and refill as necessary. Ideally, the oil level should be checked with the engine cold and the car resting on level ground. If the engine is running and already getting warm, wait for at least five minutes after switching off the Start switch before checking the oil level.

1 Withdraw the dipstick and wipe off the oil on it.

2 Slowly insert the oil dipstick and pull it out again to check the oil level; the oil level shall not be lower than the " MIN " mark on the oil dipstick.

3 Unscrew the engine oil filler cap and refill the oil to maintain the oil level between " MAX " mark and " MIN " mark on the oil dipstick.

4 Please wait for 5 minutes and then recheck the oil level; add an appropriate amount of oil if necessary - DO NOT OVERFILL!

5 Finally, ensure the dipstick is inserted and oil filler cap is fully secured.

Engine Oil Specification

Use the engine oil recommended and certified by the SAIC Motor. Refer to "Recommended Fluids and Capacities" in the "Technical Data" section.

Note: Any engine misfire, loss of engine performance or engine run-on, could seriously damage the catalytic converter and particulate filter. Regular maintenance must be carried out in accordance with the maintenance schedule specified by the manufacturer. Any modifications to the engine without manufacturer authorisation is prohibited.

IMPORTANT
Check the engine oil level more frequently if the vehicle is driven at high speeds for prolonged periods.

Catalytic Converter

The temperatures of exhaust systems that contain particulate filters and catalytic converters can be extremely high, DO NOT park on ground where combustible materials such as dry grass or leaves could come into contact with the exhaust system - in dry weather a fire could result.

The exhaust system incorporates a catalytic converter and particulate filter (model dependent), these process possible harmful exhaust emissions from the engine into more environmentally friendly gases. Exhaust system layouts differ between engine derivatives.

Catalytic converters and gasoline particulate filters are easily damaged through improper use, please observe the following precautions to minimise the chance of accidental damage.

Fuel

- Use ONLY fuel recommended for your vehicle.
- Never allow the vehicle to run out of fuel – this could cause engine misfire and serious damage to the catalyst converter.

Engine Oil

- Use ONLY engine oil recommended for your vehicle. If a non-recommended oil is used, the catalyst converter may be damaged.

Note: Carry out scheduled servicing according to the maintenance schedule in the "Warranty & Maintenance Handbook".

Starting

Pay attention to the following when starting the engine:

- Do not continue to operate the starter after a few failed attempts; seek an Authorised Repairer.
- Do not operate the starter if an engine misfire is suspected and do not attempt to clear a misfire by pressing the accelerator pedal.
- Do not attempt to push or tow start the vehicle.

Driving

Please pay attention to the following conditions:

- Do not overload or excessively 'rev' the engine.
- Do not stop the engine when the car is in motion with a gear selected.

- Consult an MG Authorised Repairer immediately if you think your vehicle's engine oil consumption is abnormal, or the engine performance will be reduced.
- If the engine is shaking abnormally, or the vehicle lacks power while driving, consult an Authorised Repairer immediately.
- Do not drive on terrain likely to subject the underside of the car to heavy impacts.

Note: Any engine misfire, loss of engine performance or engine run-on, could seriously damage the catalytic converter and particulate filter. Regular maintenance must be carried out in accordance with the maintenance schedule specified by the manufacturer. Any modifications to the engine without manufacturer authorisation is prohibited.

Cooling System

Coolant Check and Top Up

DO NOT remove the coolant pressure cap when the cooling system is hot - escaping steam or hot coolant could cause serious injury.

Coolant expansion reservoir - Gasoline Only

Coolant expansion reservoir - HEV

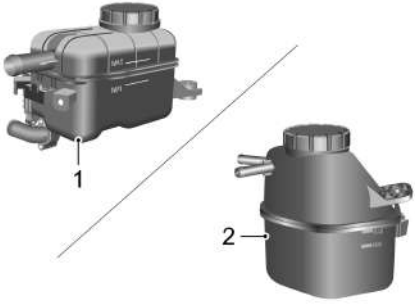

1 Hybrid drive expansion reservoir

2 Engine expansion reservoir

It is recommended that the cooling system should be checked weekly when the cooling system is cold and with the vehicle resting on level ground. If the coolant level is below " MIN " mark, remove the coolant expansion tank

cap and add coolant, but the level shall not be higher than " MAX " mark.

Prevent coolant from coming into contact with the vehicle body when topping up. Coolant will damage paint.

If the coolant level falls appreciably during a short period, suspect leakage and arrange for an MG Authorised Repairer to examine the vehicle.

Coolant Specification

Coolant is poisonous and can be fatal if swallowed - keep coolant containers sealed and out of the reach of children. If accidental contact of coolant by children is suspected, seek medical assistance immediately.

Prevent the coolant from coming into contact with the skin or eyes. If this occurs, rinse immediately with plenty of water. If eyes are still red, painful or uncomfortable, seek medical attention immediately.

Please use the coolant recommended and certified by the manufacturer. Refer to "Recommended Fluids and Capacities" in "Technical Data" section.

Note: The addition of corrosion inhibitors or other additives to the cooling system of this car may severely disrupt the efficiency of the system and cause parts damage. For cooling system issues please consult an MG Authorised Repairer.

Brake

DO NOT rest your foot on the brake pedal while driving; this may overheat the brakes, reduce their efficiency and cause excessive wear to the brake components.

The free stroke of brake pedal is in the range of 0 ~ 30 mm.

Reasonable usage scope of brake friction pair: not less than 2 mm for thickness of brake pads, 20 ~ 22 mm for front brake disc, and 8 ~ 10 mm for rear brake disc*.

For the first 900 miles (1500 km), you should avoid situations where heavy braking is required.

Note that regular maintenance is vital to ensure that all the brake components are examined for wear at the correct intervals, and replaced when necessary to ensure long-term safety during the interval prescribed in Warranty and Maintenance Handbook.

The vehicle needs to run in for 500 miles (800 km) after brake disc or pad replacement.

Brake Fluid Check and Top Up

Brake fluid is highly toxic, keep the brake fluid sealed and stored out of reach of children. If accidental contact of brake fluid is suspected, seek medical attention immediately.

Prevent brake fluid coming into contact with the skin or eyes. If this occurs, rinse immediately with plenty of water. If eyes are still red, painful or uncomfortable, seek medical attention immediately.

The brake fluid level should be checked weekly when the system is cold and with the car on level ground. Clean the cover first before opening the brake fluid reservoir.

The brake fluid level can be seen through the reservoir and should be maintained between the " MAX " and " MIN " marks.

Note: Do not allow the brake fluid level to drop below the "MIN" mark or rise above the " MAX " mark.

Note: Brake fluid will damage painted surfaces. If you accidentally spill the brake fluid on the painted surface, soak up any spillage with an absorbent cloth immediately and wash the area with water or car shampoo.

Brake Fluid Specification

Use the brake fluid recommended and approved by the manufacturer. Refer to "Recommended Fluids and Capacities" in the "Technical Data" section.

IMPORTANT
Replace brake fluid regularly according to service schedule.

Fuse Replacement

Fuse

Fuses are simple circuit breakers which protect the car's electrical equipment by preventing the electrical circuits from being overloaded. A blown fuse may indicate that there is an issue with the circuit under its protection and it is likely that the system will stop working.

If you suspect a fuse is faulty, you can take it out of the fuse box and inspect it to see if the wire in the fuse is blown.

IMPORTANT
• NEVER attempt to repair a blown fuse. ALWAYS replace a fuse with one of the same rating, otherwise the fire may be caused due to electrical system damage or circuit overload. • If a replaced fuse fails immediately, please contact a local MG Authorised Repairer for service as soon as possible.

It is recommended to have spare fuses in the vehicle, which can be obtained from an MG Authorised Repairer.

Fuse Box

The vehicle is equipped with 2 fuse boxes:

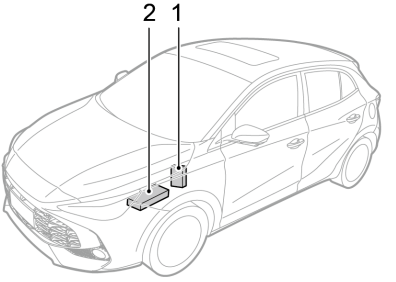

1 Passenger compartment fuse box (behind the driver side knee trim panel)

2 Front compartment fuse box (the left side of the front compartment)

Passenger Compartment Fuse Box

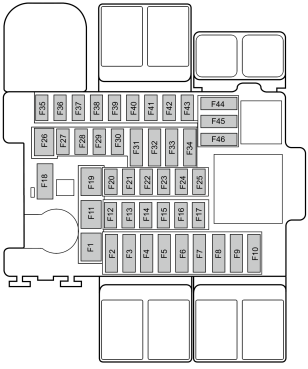

Fuse Check or Replacement

1 Power off the vehicle , turn off all electrical appliances, and disconnect the negative battery cable.

2 Remove the driver side knee trim panel to access the fuse box.

3 Clamp the fuse head with a fuse extraction tool located in the front compartment fusebox cover,, pull and remove the fuse, and check whether the fuse is blown.

4 If a fuse is blown, replace it with another fuse of the same type and same ampere value.

Fuse Specification

Code	Specs	Function
F1	40A	Front Blower
F2	5A	Data Link Connector and Instrument Pack
F3	10A	Gateway
F4	5A	Rain/light Sensor, Front View Camera Module, Rear Corner Radar and Start Switch

Code	Specs	Function
F5	5A	Driver Door Combination Switch, Exterior Rearview Mirrors and Headlamp Leveling Switch, Electronic Parking Switch and Gear Display
F6	5A	Rotary Coupling, Entertainment Control Panel and Instrument Desk Display
F7	5A	Alcohol Interlocking Interface Device
F8-F9	-	-
F10	10A	Seat Heating
F11-F12	-	-
F13	5A	Shifter Control Unit
F14	10A	Sensing and Diagnostic Module
F15-F17	-	-

Code	Specs	Function
F18	15A	Steering Wheel Heating
F19	-	-
F20	20A	Sunroof
F21	20A	Entertainment System Control Module
F22	-	-
F23	5A	Automatic Temperature Control
F24	-	-
F25	5A	Communication Module
F26-F28	-	-
F29	10A	Electronic Steering Column Lock
F30-F34	-	-
F35	5A	Instrument Pack

Code	Specs	Function
F36	20A	Entertainment System Control Module
F37	5A	Entertainment Control Panel
F38	5A	Air-conditioning
F39	20A	Transmission Control Module
F40	15A	Start Stop Electric Oil Pump
F41-F43	-	-
F44	15A	Front Console Power Socket
F45	5A	Headlamp Switch, Headlamp, Blower Relay and Pedestrian Alert Control Module
F46	5A	Interior Rearview Mirror USB Ports, Rear USB Ports, Mobile Phone Wireless Charging

Front Compartment Fuse Box

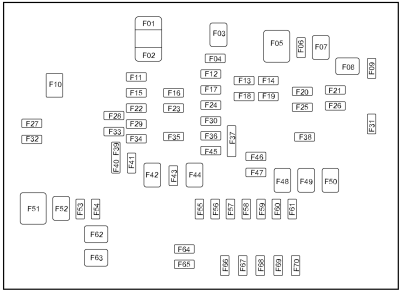

Fuse Check or Replacement

1 Power off the vehicle and turn off all electrical appliances, and disconnect the negative battery cable.

2 Press the lock catch to open the upper cover of front compartment fuse box.

3 Clamp the fuse head with a fuse extraction tool in the upper cover, pull and remove the fuse, and check whether the fuse is blown.

4 If a fuse is blown, replace it with another fuse of the same type and same ampere value.

Fuse Specification

Code	Specs	Function
F1	-	-
F2	30A	DC to DC Converter
F3	40A	Heated Rear Window Relay
F4	10A	Heated Exterior Rearview Mirrors
F5	40A/60A	Stability Control System/Integrated Braking System
F6	30A	Body Control Module
F7	40A/60A	Stability Control System/Integrated Braking System
F8	30A	Electric Vacuum Pump
F9	-	-
F10	30A	Starter Motor Relay
F11	30A	Body Control Module
F12	30A	Body Control Module
F13	5A	Instrument Pack, Gateway, Body Control Module
F14	10A	Alcohol Interlocking Interface Switch
F15	20A	Engine Control Module
F16	20A	Transmission Control Module
F17	5A	Battery Sensor
F18	5A	Sensing and Diagnostic Module and Parking Assist Sensor

Code	Specs	Function
F19	10A	Stability Control System, Integrated Braking System, Transmission Control Module, Engine Control Module , Battery Management System and Automatic Gearshift Mechanism
F20-F21	-	-
F22	15A	Clutch Master Cylinder Stroke Sensor and Three-state A/C Pressure Switch
F23-F24	-	-
F25	10A	Battery Management System
F26-F27	-	-
F28	15A	Ignition Coil

Code	Specs	Function
F29	15A	Transmission Control Module
F30	10A	Engine Control Module
F31	15A	Rear Wiper Motor
F32	10A	A/C Compressor
F33	15A	Fuel Injector
F34	5A	Brake Switch
F35	-	-
F36	30A	Body Control Module
F37	15A	Horn Relay and Washer Relay
F38	5A	Heated Rear Window Relay
F39	-	-
F40	20A	Constant Pressure fuel Supply Pump

Code	Specs	Function
F41	5A	Starter Motor Relay
	15A	PEU Coolant Pump
F42	30A	Front Left Window Regulator, Driver Door Combination Switch, and Rear Left Window Regulator Switch
F43	30A	Body Control Module
F44	30A	Front Passenger Window Regulator Switch,and Rear Right Window Regulator Switch
F45	30A	Body Control Module
F46	20A	Towing Device Module
F47	15A	Towing Device Module
F48	30A	Power Electric Unit

Code	Specs	Function
F49	30A	Belt Actuation Electric Oil Pump
F50	25A	Front Wiper Motor

12V Battery

Battery Maintenance

DO NOT use on-board electrical appliances for an extended period of time when the vehicle is not started, otherwise the battery may become flat, resulting in the failure tostart the vehicle and the reduction of battery life.

Always store batteries upright, and never attempt to dismantle a battery.

The battery is designed to be maintenance free, so topping-up is unnecessary.

According to the current load condition and the status of the battery, the system may limit the power of some electrical appliances, please start the vehicle as soon as possible to charge the battery.

Note:

When the vehicle will not be used for an extended period, it is recommended that the battery negative terminal clamping pile head should be disconnected.

Make sure that the vehicle is powered off before connecting or disconnecting the negative battery cable.

When reconnecting the negative battery cable, ensure that the clamping pile head and the negative battery cable are securely secured.

When the vehicle will not be used for a long period of time without disconnecting the negative battery cable, it is recommended that the vehicle be driven or idled for more than half an hour per week to help prolong the life of the battery.

Battery Replacement

The battery contains sulphuric acid, which is corrosive.

Please contact an MG Authorised Repairer to remove and install the battery. Only fit a replacement battery of the

same type and specification as the original to maintain the correct vehicle functionality.

Used batteries can be harmful to the environment, so they must be disposed of using an approved method and be recycled by a professional company. Please consult a local Authorised Repairer for more details.

Bulb Replacement

Bulb Specification

Bulb	Specification
Front Reading Lamp	W5W 5W
Rear Interior Lighting*	C10W 10W
High and low beams*	HB3 55/60W 55/60W
Front Turn Signal Bulb	PY21W 21W
Rear position light/Brake Light Bulb	W21W/5W 21W/5W
Rear Turn Signal Bulb	WY16W 16W
Reverse Lamp	W16W 16W
Rear Fog Lamp	W21W 21W
License Plate Lamp	W5W 5W

Note: Other light sources not listed are LED , which cannot be replaced separately.

Bulb Replacement

Before replacing any bulb, turn off the vehicle's power supply to avoid any possibility of a short circuit.

Note: The replacement bulb must be identical to the original one in type and specification.

If the bulb glass is scratched or contaminated, it may cause the bulb to not concentrate the light. Take care NOT to touch the glass with your fingers; If necessary, clean the glass with methylated spirits to remove fingerprints.

For other bulbs not listed and to be replaced, ask an MG Authorised Repairer for guidance.

Front Reading Lamp

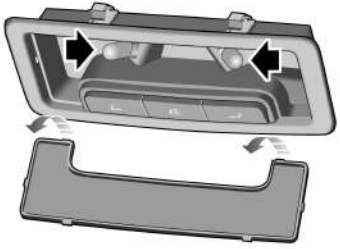

1 Disconnect the negative terminal of the battery.

2 Use a small flat-bladed screwdriver to gently prise the lens from the light unit.

3 Pull the bulb from its mounting to remove.

4 Install the new bulb to the lamp holder.

5 Install the lens, locate the two prongs at the front of the lens and then carefully flex the lens to locate the two prongs at the rear of the lens into the lamp assembly. Push the lens upwards until it 'clicks' into position

6 Connect the negative terminal of the battery.

7 Check front reading lamp operation.

Rear Interior Lighting*

1 Disconnect the negative terminal of the battery.

2 Gently pry the lampshade off the lamp assembly using a "one" screwdriver and remove the damaged bulb.

3 Install the new bulb into the lamp holder.

4 Install the lens, locate the two prongs at the front of the lens and then carefully flex the lens to locate the two prongs at the rear of the lens into the lamp assembly. Push the lens upwards until it 'clicks' into position.

5 Connect the negative terminal of the battery.

6 Check if the rear reading light is working properly.

High and Low Beam*

1 Open the bonnet, refer to "Bonnet" in the "Maintenance" section.

2 Disconnect the negative terminal of the battery.

3 Rotate the high and low beam bulb cover counterclockwise to the appropriate position and remove the bulb cover.

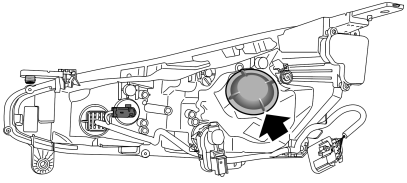

4 Rotate the bulb assembly counterclockwise, disconnect the wiring harness connector, and remove the damaged high and low beam bulb.

5 Connect the wiring harness connector, position the new bulb assembly at the installation location, and rotate clockwise until it is fully secured.

6 Install the high and low beam bulb cover and rotate it clockwise to install it in place.

7 Connect the negative terminal of the battery and check if the high and low beam lights are working properly.

8 Close the bonnet, refer to "Bonnet" in the "Maintenance" section.

Front Indicator Bulb

1 Open the bonnet, refer to "Bonnet" in the "Maintenance" section.

2 Disconnect the negative terminal of the battery.

3 Rotate the bulb holder counterclockwise to remove the front indicator bulb holder.

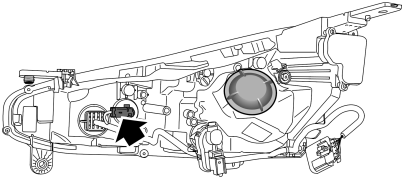

4 Press down and rotate counterclockwise to the appropriate position to remove the damaged front indicator bulb.

5 Install the new bulb into the socket, press the bulb down and rotate clockwise until it is fully secured.

6 Position the front indicator lamp socket at the installation position and rotate it clockwise until it is fully secured.

7 Connect the negative terminal of the battery and check if the front indicator lights are working properly.

8 Close the bonnet, refer to "Bonnet" in the "Maintenance" section.

Rear Position Light & Rear Indicator Stop/Tail Light Bulb

1 Open the tailgate.

2 Disconnect the negative terminal of the battery.

3 Remove the two plugs on the side tail light trim panel.

4 Remove the bolts that secure the tail lamp assembly to the vehicle body.

5 Disconnect the wiring harness connector and remove the tail lamp assembly.

6 Rotate the rear indicator lamp socket counterclockwise 1 or position/brake light 2 , remove the lamp holder and remove the rear indicator bulb or position/brake light bulb.

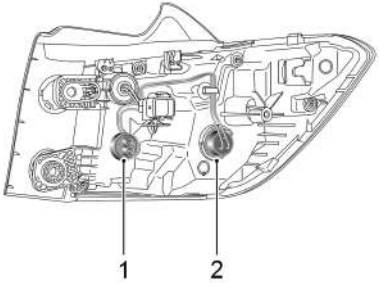

7 Install the new rear indicator bulb or position/brake light bulb onto the lamp holder.

8 Rotate the rear indicator lamp holder or position/brake lamp holder clockwise and install it onto the lamp assembly.

9 Ensure that the tail lamp assembly sealing gasket is installed in place.

10 Connect the wiring harness connector and secure the tail lamp assembly to the body, then install 2 Bolts , tighten to 3 - 5 Nm。

11 Install the two plugs on the tail lamp trim panel.

12 Connect the negative terminal of the battery.

13 Check if the rear indicator or position/brake light is working correctly.

14 Close the tailgate.

Rear Fog Lamp

1 Open the tailgate, refer to "Tailgate" in the "Preparations for trip" section.

2 Disconnect the negative terminal of the battery and keep the vehicle stationary for at least 1 minute.

3 Using a "one" screwdriver, pry open the left maintenance access cover of the tailgate interior panel to expose the rear fog lamp socket.

4 Rotate the rear fog lamp socket counterclockwise, remove the socket, and remove the damaged rear fog lamp bulb.

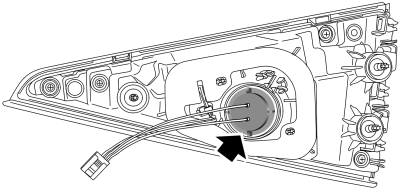

5 Install the new rear fog lamp bulb onto the socket and position the rear fog lamp socket onto the rear combination lamp. Tighten clockwise to ensure proper installation.

6 Install the left maintenance access cover of the tailgate interior panel.

7 Connect the negative terminal of the battery.

8 Check if the rear fog lamp are working correctly.

9 Close the tailgate.

Reverse Lamp

1 Open the tailgate, refer to "Tailgate" in the "Preparations for trip" section.

2 Disconnect the negative terminal of the battery and keep the vehicle stationary for at least 1 minute.

3 Using a "one" screwdriver, pry open the right maintenance access cover of the tailgate interior panel to expose the reverse lamp socket.

4 Rotate the reverse lamp socket counterclockwise, remove the socket, and remove the damaged reverse lamp bulb.

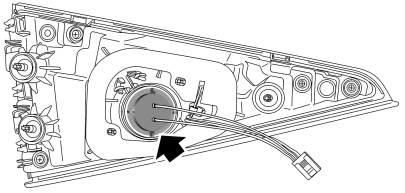

5 Install the new reverse lamp bulb onto the bulb holder and position the reverse lamp holder onto the rear combination lamp. Tighten clockwise to ensure proper installation.

6 Install the right maintenance access cover of the tailgate interior panel.

7 Connect the negative terminal of the battery.

8 Check if the reverse lamp is working correctly.

9 Close the tailgate.

License Plate Lamp

1 Disconnect the negative terminal of the battery.

2 Gently push the license plate light from the left to the right using a pry tool.

3 Carefully pry down the license plate light using the pry tool.

4 Remove the damaged bulb and install a new one to the bulb holder.

5 When installing the license plate light, first fit the left side of the license plate light into the groove.

6 Push the right side of the license plate lamp upwards with your fingers and hear a "click" sound.

7 Connect the negative terminal of the battery.

8 Check if the rear license plate light is working correctly.

IMPORTANT
Take extra care so as not to damage the paint surface and clips around the license plate light.

Washer

Washer Fluid Check and Top Up

Windscreen washer fluid is flammable. DO NOT allow windscreen washer fluid to come into contact with naked flames or sources of ignition.

When filling the washer fluid, do not let the washer fluid spill around the powertrain or on the paint surface of vehicle body. In case the washer fluid is spilled on hands or other parts of the body, please immediately wash with clean water.

Check the washer fluid level regularly. When the level of washer fluid is low, please top up the washer fluid as instructed. Use the washer fluid recommended and certified by the manufacturer. Refer to "Recommended Fluids and Capacities" in the "Technical Data" section.

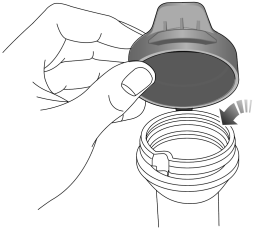

Note: DO NOT use an anti-freeze or vinegar/water solution in the washer reservoir-anti-freeze will damage paintwork while vinegar will damage the washer pump.

IMPORTANT

- Use the washer fluid recommended and certified by the manufacturer. Misuse of washer fluid in winter may cause damage to the washer motor due to freezing.
- Operating on the washer switch when there is no washer fluid may cause damage to the washer motor.
- Operating the wipers when the windscreen is dry and there is no washer fluid may cause damage to the windscreen and wiper blades. Please spray the washer fluid and start the wipers when there is adequate washer fluid.

Washer Nozzles

The windscreen washer nozzles are located on the A/C air intake grille panel in the front compartment, and is configured during the factory settings, so generally there are no need for adjustments. To adjust a washer nozzle, you can insert a small flat-bladed screwdriver in the gap (the black area indicated by the arrow) between the housing (1) and the nozzle (2) and turn the nozzle downward or upward slightly to obtain an appropriate ejection angle.

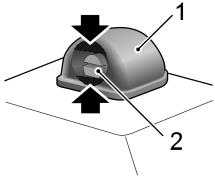

Operate the washer to spray water periodically to check if the washer nozzles are clean and in the correct direction. If the nozzle is obstructed, insert a needle or thin metal wire into the hole to remove the obstruction.

Wipers

Wiper Blades

IMPORTANT
• Grease, silicon and petroleum products impair the blade's wiping capability. Clean the wiper blades in warm soap water, and check their status periodically. • Clean the windscreen frequently. DO NOT use wiper blades to remove stubborn or ingrained dirt, it will reduce their effect and their life span. • If signs of hardness or cracking in the rubber are found, or if the wipers leave streaks or unwiped areas on the windscreen, then the wiper blades should be replaced. • Clean the windscreen regularly with an approved glass cleaner and ensure the windscreen is thoroughly cleaned before the replacement of wiper blades. • Only fit the wiper blades that are identical to the original specification. • Clean ice and snow from the wipers and ensure they are not frozen or otherwise, sticking to the windscreen before attempting to operate them.

Windscreen Wiper Blade Replacement

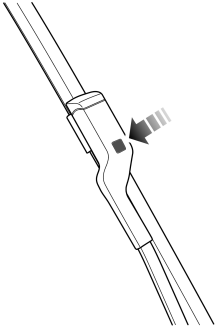

1 With the bonnet closed, and within 20 seconds of switching the ignition/vehicle power system to the OFF position, operate the wiper stalk switch by pressing down and releasing, the wipers will sweep and stop in the 'service position' on the windscreen.

2 Lift the wiper arm away from the windscreen.

3 Press the button on the wiper arm (as illustrated), and pull the upper end of the wiper blade outward to disengage from the wiper arm.

4 Unhook the blade from the wiper arm and discard.

5 Locate the new wiper into the slot of the wiper arm.

6 Push the wiper blade towards the wiper arm until the wiper blade is fully embedded.

7 Put the wiper assembly back onto the windscreen, and check whether the wiper blade is fixed correctly onto the wiper arm.

8 To exit the service mode and return the wipers to the park position, operate the wiper stalk switch again by pressing down and releasing, alternatively, switch thevehicle power system to the ON position.

Rear Window Wiper Blade Replacement

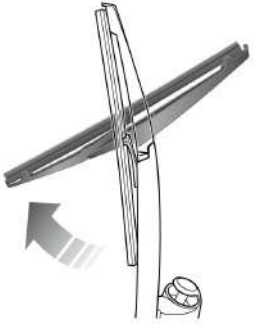

1 Lift the wiper arm away from the rear window.

2 Rotate the wiper blade as shown in the figure, to remove it from the wiper arm and discard.

3 Put the fitting of the new wiper blade into the slot of the wiper arm. Ensure the wiper blade is properly secured on the wiper arm.

4 Place the wiper assembly back on the rear window.

Tyre

Overview

- Take extra care when using new tyres for the first 300 300 miles (500 km)
- Avoid excessive cornering at speed.
- Where possible, do not allow wheels to bump on/off kerbs, always take extra care when crossing kerbs/driveways.
- Regularly check tyres for damage (cuts, scratches, cracks and pits) and remove any foreign objects from the tread.
- Prevent the tyre from contacting oil, grease and fuel.
- Ensure valve caps are always fitted.
- If the tyre is to be removed always mark the tyre/wheel orientation to ensure correct re-installation.
- Wheels or tyres that have been disassembled should be kept in a cool, dry and light-free place.

Directional Tyres

Directional tyres are marked with "direction of rotation" (DOR). To maintain handling characteristics, tyre performance, low road noise and extend tyre life, tyres/wheels must always be fitted with indication arrow showing the correct "DOR".

Service Life of Tyres

Correct tyre pressure and moderate driving styles can extend tyre life.. Recommendations:

- Check the tyre pressures at least once a month when the tyre is cold;
- Avoid cornering at excessive speeds;
- Regularly check tyres for abnormal wear patterns.
- When the vehicle is to be parked for a long time, the vehicle should be moved at least once every two weeks to prevent permanent deformation of the tyres due to long-term stress.

The following factors affect the tyre life:

Tyre Pressure

Over or under-inflated tyres will cause the abnormal wear of the tyre, greatly shorten the service life, and have an adverse effect on the driving characteristics of the vehicle.

Driving Style

Excessively harsh acceleration and braking whilst cornering will reduce tyre life.

Wheel Balance

The wheels of a new vehicle are subject to dynamic balance testing, but out-of-balance wheels may still be caused due to the effects of various factors in operation.

If wheels are out of balance, shaking or vibration of the steering mechanism may occur and the tyres may start to wear excessively. It is important to restore wheel balance as quick as possible. Each wheel should be rebalanced after installing a new tyre or having a tyre repair.

Wheel Alignment Defect

Incorrect wheel alignment can cause excessive tyre wear and affect vehicle safety. If the tyres show signs of abnormal wear, check the wheel alignment and seek advice from an MG Authorised repairer.

Caring for Your Tyres

USE OF DEFECTIVE TYRES ARE DANGEROUS! DO NOT drive if any tyre is damaged, excessively worn, or inflated to an incorrect pressure.

When replacing tyres it is strongly recommended that the new tyres are of the same specification as the original tyres. DO NOT replace the tyres with tyres of any other type. Alternative tyres, of a different specification, may adversely affect the vehicle's driving characteristics and safety. In order to maintain driving characteristics and safety , it is suggested that you consult an MG Authorised Repairer.

Always drive with consideration for the condition of the tyres, and regularly inspect the tread and side walls for any sign of distortion (bulges), cuts or wear.

Note: Prevent tyres from coming into contact with oil, grease and fuel.

Tyre Pressure

Before a long distance journey, the tyre pressure must be checked.

Check the pressures at least every month, when the tyres are cold.

If it is necessary to check the tyres when they are warm, you should expect the pressures to have increased by 30 ~ 40 kPa (i.e. 0.3 ~ 0.4 bar). In this circumstance, NEVER let air out of the tyres in order to match the recommended pressures (cold) in the technical data.

Valves

Keep the valve caps firmly secured to prevent dirt from entering the valve. Check the valve for leaks (listen for a tell-tale hissing) when you check the tyre pressure.

Punctured Tyres

If a tire is punctured by a sharp object and left on the tire, the tire may not necessarily leak. If you encounter this situation, please drive carefully at low speed and repair it as soon as possible.

Note: If the sidewall of the tyre is damaged or distorted, replace the tyre immediately, do not attempt to repair it.

Tyre Wear Indicators

The tyres fitted as original equipment have about 2.0 mm-high wear indicators at their tread pattern bottom, vertical with the wheel rolling direction and evenly distributed around the circumference. The mark on the tyre side such as capital letters TWI or triangular symbol shows the location of wear indicator.

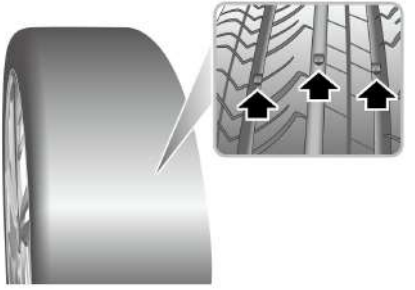

When the tread has worn down to 2.0 mm or below, the indicators will come to the surface of the tread pattern, producing the effect of a continuous band of rubber across the width of the tyre.

IMPORTANT
A tyre MUST be replaced as soon as a wear mark becomes visible. Otherwise there may be a risk of accidents.

Wheel Fitment Rotation

It is recommended that you swap wheels at irregular intervals in order to equalise tyre wear.

When the tyres are worn seriously, it is recommended to swap the front and rear wheels as shown in illustration. This can prevent tyres from uneven wear, prolong the life span and balance tyre fatigue.

It is favorable to swap the driving wheels from front to rear and exchange non-driving wheels across.

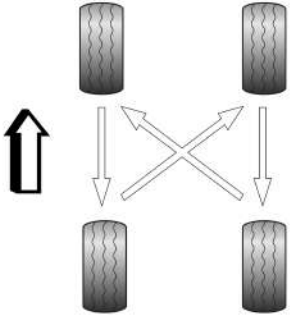

Note: Directional tyres (identified from the arrow on the tyre side) CANNOT be swapped from side to side.

Note: TPMS self-learning is required after the wheel fitment rotation. Please consult an MG Authorised Repairer for details.

Tyre/Snow Chains

Unsuitable tyre/snow chains may damage the tyres, wheels, suspension, brakes or bodywork of your vehicle.

Please pay attention to the following requirements in the usage:

- The tyre/snow chains can only be fitted on the front wheels;
- The thickness of tyre/snow chains must not exceed 15 mm;
- Please always observe the installation and tension instructions for the tyre/snow chains, as well as the speed limitations of different roads;
- Please avoid driving styles where heavy braking, sharp turns, etc are required with tyre/snow chains installed.
- If there are abnormal sounds during the use of tyre/snow chains, please park the vehicle in a safe area as soon as possible to check the chassis.
- Do not drive faster than 25 mph (40 km/h);
- To avoid the tyre damage and excessive wear of the tyre/snow chains, the tyre/snow chains must be removed while driving on the road without snow.

Size and Specifications of Wheels and Tyres Supporting Tyre/Snow Chains for This Vehicle	
Wheel Rim Size	5.5J×15
Tyre Size	185/65 R15 88H

Note: Please ensure the specifications of tyres and rims of the vehicle are the same as those listed in the above table prior to purchasing tyre/snow chains, otherwise tyre/snow chains cannot be fitted.

Note: If you often drive on snow covered and icy roads, it is recommended to use winter tyres. Please consult an MG Authorised Repairer for details.

Cleaning and Caring

Observe all safety precautions on cleaning products; Do Not drink fluids and keep them away from the eyes.

Exterior

Washing Your Car

In order to prevent accidents you should only clean your car when the power system is OFF.

Do not clean the front compartment with high pressure water since it may damage the electrical system of the vehicle.

Some high pressure cleaning systems will penetrate door, window and sunroof seals, and damage lock mechanisms. DO NOT aim water jets directly at components that might be easily damaged.

Water or moisture on parts of the braking system will reduce braking performance, this may increase the risk of accidents.

In order to preserve the paint finish on your car, please observe the following care points:

- DO NOT use hot water to wash the car.
- DO NOT use detergents or washing up liquid.
- In hot weather, DO NOT wash the car in direct sunlight.
- When using a hose, DO NOT aim the water directly at window, door or sunroof seals, or through wheel apertures onto the brake components.

If the car is particularly dirty, use a hose to flush grime and grit from the bodywork, prior to washing. Then, wash the car using cold or lukewarm water containing a good quality wash and wax shampoo. Always use plenty of water to ensure that grit is flushed from the surface and not ground into the paintwork. After washing, rinse the bodywork with clean water and dry off with a chamois leather.

Cleaning the underside

Do not clean the front compartment with high pressure water since it may damage the electrical system of the vehicle.

From time to time, but particularly during winter months when salt has been used on the roads, use a hose to wash the underside of the car. Flush away accumulations of mud

and thoroughly clean those areas where debris can easily collect (wheel arches and panel seams, for example).

IMPORTANT
• Avoid cleaning the vehicle in direct sunlight. • When cleaning the vehicle in winter avoid spraying water directly onto door locks and panel gaps due to risk of icing. • Do not use rough sponges or cloth to clean the car, this will damage the paintwork finish. • When cleaning the headlamps do not use a dry cloth or sponge, use only warm soapy water.

Cleaning with High Pressure Cleaner

Always read the manufacturers operating instructions.

When using high pressure washers, always ensure there is adequate distance between the spray nozzle and any soft materials, decals or rubber seals.

Note: DO NOT direct the pressure washer nozzle directly toward the high voltage components or high voltage connections.

IMPORTANT
• Please pay attention to the operating instructions of high pressure cleaner. • Soft parts on the vehicle should be kept in a large enough distance from the high pressure cleaner.

Polishing the Paintwork

Occasionally treat the paint surface with an approved polish containing the following properties:

- Very mild abrasives to remove surface contamination without removing or damaging the paint.
- Filling compounds that will fill scratches and reduce their visibility.
- Wax to provide a protective coating between the paint and the elements.

Note: If possible, avoid applying polish or wax products to window glass and rubber seals.

Matte paint

Matte paint is a special kind of coating, and special care should be taken when washing cars and caring for them.

It is recommended to wash the car by hand and do not use a rough sponge or car wash cloth. When cleaning and wiping, do not use excessive force. Avoid washing your car in direct sunlight.

- Do not use a high pressure water jet or steam to clean the vehicle. If the vehicle is quite dirty, it is necessary to pre-clean the car before washing it. Use a hose to flush off any grime, grit and other particles that may damage the paint surface first.
- Spray the body with plenty of clean water and dry the body after washing it from the roof downwards using a soft sponge and neutral wax-free car wash solution.

During the daily care of your car, attention shall also be paid to:

- If the paint film comes into contact with resin or grease, as well as insect residue or bird excrement, remove it immediately to avoid irreversible damage to the matte paint surface.
- If there are oil stains or fingerprints on the matte paint surface, remove them immediately with a clean cloth, do not use excessive force to avoid irreversible damage to the matte paint surface.
- In order to maintain the matte effect of the paint surface, abrasives, polishes and polishing waxes cannot be used, and the body cannot be polished.
- Do not use any stickers, patches, magnets or similar to prevent damage to the paint surface.
- Be sure to repair the paint film in a qualified professional repair workshop.

Wiper Blades

Wash in warm soapy water. DO NOT use spirit or solvent based cleaners.

Windows and Mirrors

Regularly clean all windows, inside and out, using an approved glass cleaner.

Windscreen: In particular, clean the outside of the screen with glass cleaner after washing the car with wash and wax products, and before fitting new wiper blades.

Rear screen: Clean the inside with a soft cloth, using a side to side motion to avoid damaging the heating elements.

Mirrors: Wash with soapy water. Use a plastic scraper to remove ice. DO NOT use abrasive cleaning compounds or metal scraper.

Plastic Components

Any plastic components should be cleaned using conventional cleaning methods and not be treated with abrasive materials.

Paint Damage

Any paint damage or stonechips should be treated with suitable paint/lacquer materials immediately to avoid invalidating the Anti Corrosion Warranty.

Weather Strips

Any weather strips or rubber aperture seals should be treated with suitable materials (silica gel) if they are cleaned using strong detergents, this should avoid any sticking and maintain the service life of the seal.

Wheels

When cleaning the wheels any materials or water that contact the brake disc directly may effect braking efficiency.

In order to ensure the wheels are kept in optimum condition they should be cleaned regularly.

Only use a recommended non-acidic propriety wheel cleaner. Always read the instructions on the product.

Cleaning the Interior

Plastic materials

Clean plastic-faced materials with diluted upholstery cleaner, then wipe with a damp cloth.

Note: DO NOT polish dashboard components – these should remain non-reflective.

Carpet and fabrics

Clean with diluted upholstery cleaner - test a concealed area first.

Leather

Clean leather trim with warm water and a non-detergent soap. Dry and polish the leather with a dry, clean, lint-free cloth.

Note: DO NOT use petrol, detergents, furniture creams or polishes as cleaning agents.

Instrument Pack, Infotainment Display

Clean with a dry cloth only. DO NOT use cleaning fluids or sprays.

Airbag Module Covers

DO NOT allow these areas to be flooded with liquid and DO NOT use petrol, detergent, furniture cream or polishes.

To protect damage to the airbag SRS, the following areas should be cleaned sparingly with a damp cloth and upholstery cleaner ONLY:

- Steering wheel centre pad.
- Area of dashboard containing the passenger airbag.
- Area of roof lining and front pillar finishers which enclose the side head impact protection modules.

Seat Belts

DO NOT use bleaches, dyes or cleaning solvents on seat belts.

Extend the belts, then use warm water and a non-detergent soap to clean. Allow the belts to dry naturally; DO NOT retract them or use the car until they are completely dry.

Technical Data

Technical Data Dimensions	*326*
Vehicle Weights	*328*
Towing Weights	*329*
Major Parameters of Engine	*331*
Dynamic Performance Parameters	*332*
Parameters of Drive Motor	*333*
Recommended Fluids and Capacities	*334*
Wheel Alignment (Unladen Condition)	*335*
Wheels and Tyres	*336*
Tyre Pressures (Cold)	*337*

Technical Data Dimensions

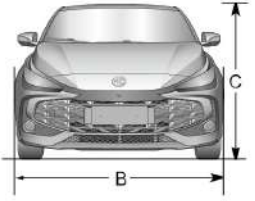

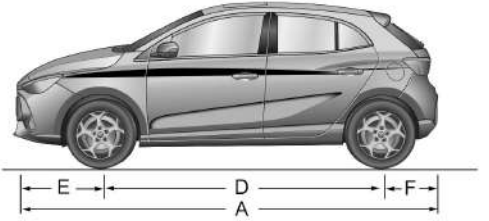

Item, unit	Parameter		
	GS62H 1.5L HT11	GS62 1.5L CVT	GS62 1.5L MT
Overall length A ,mm	4113		
Overall width B ,mm	1797		
Overall height C (unladen) ,mm	1502		
Wheelbase D ,mm	2570		

Item, unit	Parameter		
	GS62H 1.5L HT11	GS62 1.5L CVT	GS62 1.5L MT
Front overhang E ,mm	892		
Rear overhang F ,mm	651		
Front wheel track, mm	1514		
Rear wheel tarck, mm	1535		
Minmum turning circle diameter, m	10.5		
Fuel tank capacity, L	36	45	45

Note: Vehicle length not including the license plate.

Note: Rearview mirrors and the deformed portion of tyre wall directly above the touchdown point are not included in the total width.

Vehicle Weights

Item, unit	Parameter					
	GS62H 1.5L HT11 TL1	GS62H 1.5L HT11 TL2	GS62H 1.5L HT11 TL3	GS62 1.5L MT TL1	GS62 1.5L MT TL2	GS62 1.5L CVT TL2
Person in cab, person	5					
Unladen vehicle weight(kerb),kg	1285	1298	1308	1162	1162	1219
Gross vehicle weight, kg	1733	1746	1766	1610	1610	1677
Unladen front axle weight, kg	816	824	831	727	727	774
Unladen rear axle weight, kg	469	474	477	435	435	445
Laden front axle weight, kg	926	935	946	838	838	889
Laden rear axle weight, kg	807	811	820	772	772	788

Towing Weights

Towing parameters

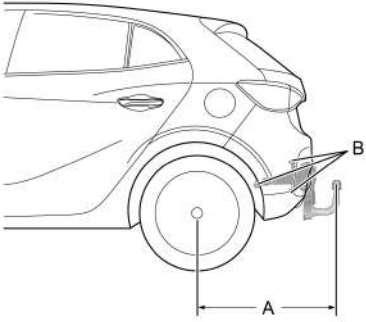

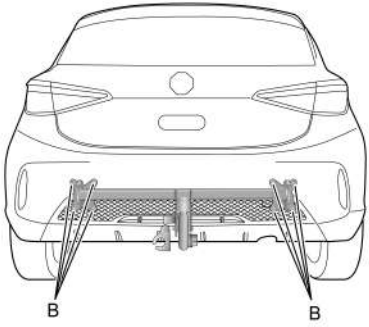

Item, Units	Parameters
Towing limit unbraked, kg	500
Towing limit braked, kg	500

Item, Units	Parameters
Towing hitch load, kg	75
Wheel centre to centre of tow ball A , mm	738
Towing device mounting points	B

Note: When towing a trailer, the vehicle speed MUST not exceed 62 mph (100km/h).

Note: Prior to towing a trailer, please check the rear tyre pressures, inflate to at least 20 kPa (0.2 bar) above the recommended pressure - DO NOT allow the tyre pressure to exceed 300 kPa (3.0 bar), this can be dangerous.

Major Parameters of Engine

Item, unit	Parameter	
	GS62	GS62H
Bore × Stroke, mm × mm	73.5x88.1	72x92
Total displacement, L	1.495	1.498
Compression ratio	12.2±0.4	16.0±0.5
Maximum net power, kw	85	75
Engine speed at maximum power, rev/min	6000	6000
Maximum torque, Nm	148 (EU , Turkey)	128 (EU , Turkey,Israel)
Engine speed at maximum torque, rev/min	4500	4500
Fuel grade RON	Unleaded gasoline RON 95 or gasohol E5-E10	Unleaded gasoline RON 95 or gasohol E5-E10

Dynamic Performance Parameters

Item, unit	Parameter		
	GS62H 1.5L HT11	GS62 1.5L CVT	GS62 1.5L MT
Maximum speed, km/h	170	185	185
Gradeability, %	30	30	30

Note: The dynamic performance parameters are test data under specific conditions.

Note: Gradeability is affected by different road surfaces, tyre pressures, tyre tread depth and vehicle load.

Parameters of Drive Motor

Item	Front drive motor
Motor type	Permanent magnet synchronous motor
Rated Power/Peak Power, kW	TM:72/150 GM:78/170
Rated Torque/Peak Torque, Nm	TM:250 GM:140
Rated Speed/Maximum Speed, rpm	4456.7/13000 5570.4/13000
Protection Grade	IP67

Recommended Fluids and Capacities

Name	Grade	Capacity
Engine oil (after-sales replacement), L	C5&SP 0W-20	4
Engine coolant, L	Glycol (OAT)	6.4
Drive motor coolant, L		3.4
Transmission oil, L	Castrol BOT794 (Hybrid transmission oil HT11) , Castrol BOT503 (MT MS35) , Shell SL2100(CVT TS12)	1.5 (Hybrid transmission oil HT11) , 1.8(MT MS35), 6.86(CVT TS12)
Brake fluid, L	DOT 4	0.75
Washer fluid, L	Original MG Motor windscreen washer fluid	1.5
Air conditioning refrigerant, g	R-1234yf	520±20

Wheel Alignment (Unladen Condition)

Item, unit		Parameters
Front Wheels	Camber Angle	-27¢±45¢
	Castor Angle	5°52¢±45¢
	Toe-in Angle (total toe-in)	6¢±12¢
	King Pin Inclination	13°21¢±45¢
Rear Wheels	Camber Angle	-1°25¢±45¢
	Toe-in Angle (total toe-in)	12¢±15¢

Wheels and Tyres

Wheel Rim Size	5.5J×15	6.0J×16
Tyre Size	185/65 R15 88H	195/55 R16 87H

Spare Wheel*	Wheel Rim Size	4Bx16
	Tyre Size	T115/70R16 92M

Tyre Pressures (Cold)

Wheels	All Conditions
Front Wheels	250kPa/2.5bar/37psi
Rear Wheels	250kPa/2.5bar/37psi
Spare Wheel*	420kPa/4.2bar/60psi