Foreword

Introduction to User's Handbook

Instructions for Use

Please read this handbook carefully since the information contained within the manual will assist you in the correct and safe operation of your vehicle, allowing you to get maximum enjoyment and pleasure.

The manufacturer operates a policy of constant product improvement and therefore reserves the right to change specifications without notice at any time.

Announcement

The User's and Owner's Handbooks are designed to introduce you to your vehicle, they provide information on how to correctly and safely use your vehicle.

Information on correct service and maintenance is contained within the document.

They are intended to identify agreements between the owner and the manufacturer in respect of the creation and termination of related product quality assurance liabilities, as well as any aftersales service rights and duties.

Please read the content of the manual carefully before use.

Only ever use parts, accessories, oils and fluids that are approved by the manufacturer and conform to the correct technical specifications and quality standards published by the manufacturer.

Your vehicle must be serviced and maintained in accordance with guidelines and operations issued by the manufacturer.

For optimum service and maintenance of your vehicle we recommend you consult an Authorised Repairer.

Please respect any intellectual property rights.

Always use approved accessories and parts.

Failure to adhere to these rules may cause infringement which may bear legal risks and consequences.

Any damage resulting from misuse, negligence, incorrect use or unauthorised modification may invalidate your warranty and therefore your right to claim.

If a vehicle is damaged or suffers an accident due to the use of any accessories, parts or oils & fluids that do not conform to the published technical specifications and quality standards it may result in the invalidation of the vehicle warranty or the right to claim.

If the vehicle is subject to misuse, or has been subject to improper service and maintenance, the user will lose their right to claim for damage compensation, at this time the company will not bear any corresponding liabilities.

Various countries and regions impose strict restrictions on vehicle modification and fitment of non approved accessories.

It is strictly forbidden to change the vehicle structure, framework or features without manufacturer approval, failure to conform will affect traffic safety, vehicle operation, vehicle registration or public security management.

It will not only cause malfunction or reduce performance of the related components, but could also endanger the environment and even increase the risk of harm or even death to the driver, occupants and public if parts of the vehicle are modified or altered without permission.

To access a detailed parts and warranty statement please see thee appropriate countries' MG website. For Europe, please see HYPERLINK "http://www.mgmotor.eu"www.mgmotor.eu

No part of this publication may be reproduced, stored in a retrieval system or transmitted in the form of electronic, mechanical recording or other means without prior written permission from the company.

Privacy Notice

According to the configuration, your vehicle may be equipped with an onboard audio, visual & navigation system and an intelligent connectivity system that allows you to connect to your vehicle via our app on your mobile phone.

Due to the nature of the intelligent connectivity system and the app, we process personal data.

We highly respect your privacy and personal information, and we will inform you of the following important information through the Privacy Notice. The latest version of the Privacy Notice can be found in your vehicle infotainment system. If the Privacy Notice is not available to you in your infotainment system, please read the privacy notice in your mobile app.

The contents of this notice may change from time to time, so you should review it periodically. Where possible, we will also contact you directly to notify you of any substantial changes.

Symbols Used

Warning

Warning: This warning symbol identifies procedures that must be followed precisely, or information that must be considered with great care, in order to reduce the risk of personal injury or serious damage to the vehicle.

IMPORTANT

IMPORTANT
The statements stated here must be followed strictly, otherwise your vehicle could be damaged.

Note

Note: This describes helpful information.

REMINDER

REMINDER: Items that must be observed to facilitate vehicle maintenance and use.

 This symbol indicates parts described must be disposed of by authorised bodies to protect the environment from unnecessary damage.

Asterisk

An asterisk (*) appearing after the title or the text identifies features or items of equipment that are only fitted to some models, and may not be fitted on the vehicle you purchased.

Illustrations

The illustrations in this Handbook are for reference only.

The information contained may vary slightly depending on the vehicle configuration, software version and sales regions.

 Identifies components being explained.

 Identifies movement of components being explained.

Get the Latest Multilingual Manual

The manufacturer operates a policy of constant product improvement and therefore reserves the right to change specifications and information within this manual after publication without notice at any time. Users can scan the QR code below to get the latest multilingual user manuals.



Open source software information

Software in the use of open source software on the local information, please refer to the https://www.immotors.com/global/en/handbook website.

Battery Safety Information

Batteries pose potential risks, and appropriate protective measures must be taken during operation and maintenance!

Only the correct tools and suitable protective equipment must be used when handling batteries!

Maintenance of batteries must only be performed by individuals with approved certification, specialized battery knowledge and the correct safety training!

Failure to adhere to any of the above warnings may result in severe accidents or even death!

WARNING

The keys supplied with your vehicle contains coin / button batteries. These batteries are Hazardous and must be kept away from children (whether the battery is new or used).

WARNING

A lithium coin / button battery can cause SEVERE or FATAL injuries within 2 hours or less if it is swallowed or placed inside any part of the body.

WARNING

If you think batteries may have been swallowed or placed inside any part of the body, please seek medical attention immediately.

High Voltage Battery Pack *

The high voltage battery pack contains several lithium-based battery cells and high voltage wiring harness.

Please refer to the following information and requirements.

1. High Voltage Safety:

- ONLY qualified personnel are allowed to work with the high voltage system - there is danger of DEATH.
- DO NOT attempt to dismantle any area of the high voltage or battery system, suitably trained professional staff must use insulated personal protective equipment and follow specific safety guidelines before working on or near the high voltage system.
- Arbitrary disposal may cause pollution, hazard and damage to the environment.
- Short circuit of the positive and negative terminals of the battery is strictly prohibited, it will lead to strong current and high temperatures, this may cause personal injury or even fire. Since the positive and negative terminals of the battery are exposed within a plastic protective casing, sufficient safety measures must be taken during the assembly and connection of the battery system to prevent short circuits.
- Incorrect electrical connections may cause overheating during battery usage.

2. Transportation:

The high voltage battery pack is classed as a Category 9 hazardous material and must be transported by vehicles qualified in transporting Category 9 hazardous materials.

3. Storage:

Batteries should be stored at room temperature and in a dry environment. They must be kept away from dangerous areas and objects, such as flammable materials and sources of heat and water.

4. Recycling:

The high voltage battery pack MUST be recycled by a manufacturers Authorised Repairer or a professional approved dismantling agent.

12V Lead-acid Battery / Low voltage lithium-ion battery

- DO NOT attempt to disassemble or modify without authorization.
- DO NOT short-circuit or reverse the positive and negative terminals.
- Keep away from children.
- Never use a battery that shows signs of damage, leakage or is swollen
- DO NOT tilt or invert the battery.

Portable Batteries (Including button type lithium manganese batteries, cylindrical lithium batteries, built-in nickel hydrogen batteries, etc)

All batteries contain volatile substances, such as lithium metal, organic electrolytes and other chemical substances. Improper use and operation may cause the battery to heat up, catch fire or even explode, and there is a risk of personal injury or damage. Therefore, to prevent accidents when handling batteries, the following precautions must be followed.

Please refer to the following information and requirements.

- Keep batteries away from children, if a battery is swallowed please seek medical attention immediately.
- DO NOT short circuit and never connect a battery using reverse polarity.
- DO NOT forcibly discharge, squeeze, puncture or burn the battery
- DO NOT dismantle the battery.
- A failed or discharged battery should be removed from the vehicle or appliance and disposed of according to local laws or handed to professional recycling institutions.
- DO NOT mix different types of batteries.
- DO NOT expose the battery to high temperature environment. Always keep away from fire.
- DO NOT attempt to solder directly onto a battery post or terminal.
- Store and install the battery in it's original packaging or position to avoid any possibility of external short circuit.
- DO NOT store the battery in an Electrostatic Discharge (ESD) bag or foam.

- DO NOT store batteries on metal surfaces, always ensure there is adequate insulation.
- DO NOT stack batteries or mix battery types when storing.

Precautions for Using Electric Vehicles

High-voltage System

Danger

- There are two kinds of high voltage power supplies (AC and DC) in the high voltage system. High voltage components are fitted with warning labels, always read and observe any instructions printed on these labels.
- To avoid personal injury, non-professional maintenance personnel are prohibited from contacting, dismantling or fitting any component of the high-voltage system without permission.

High-voltage system components layout - 2WD

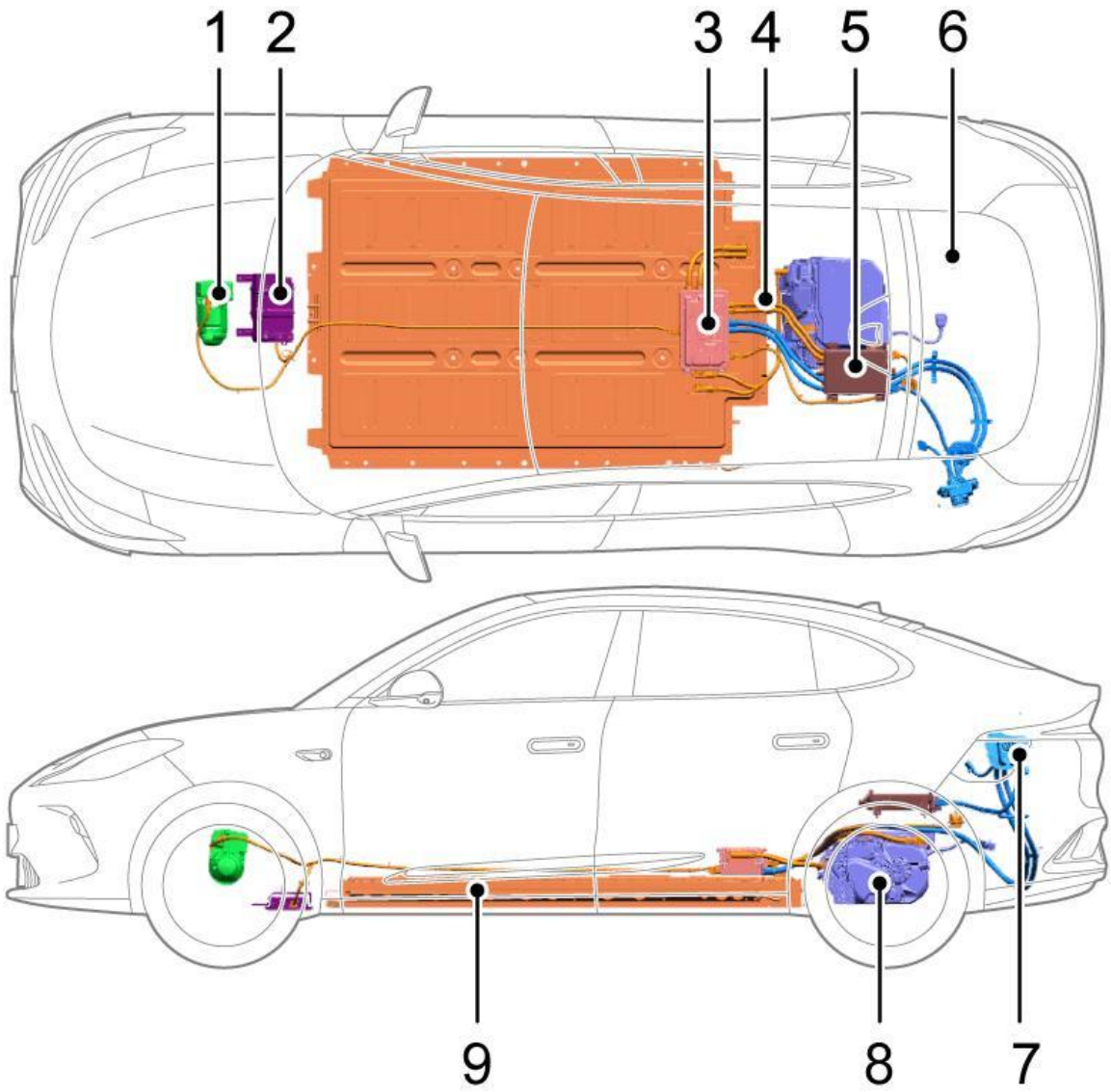

1. Electric A/C compressor
2. Battery heater
3. High-voltage power distribution unit
4. High-voltage harness

5. Combined charging unit

6. Manual service disconnect device

7. Charging port

8. Rear electric drive unit

9. High-voltage battery pack

High-voltage system components layout - 4WD

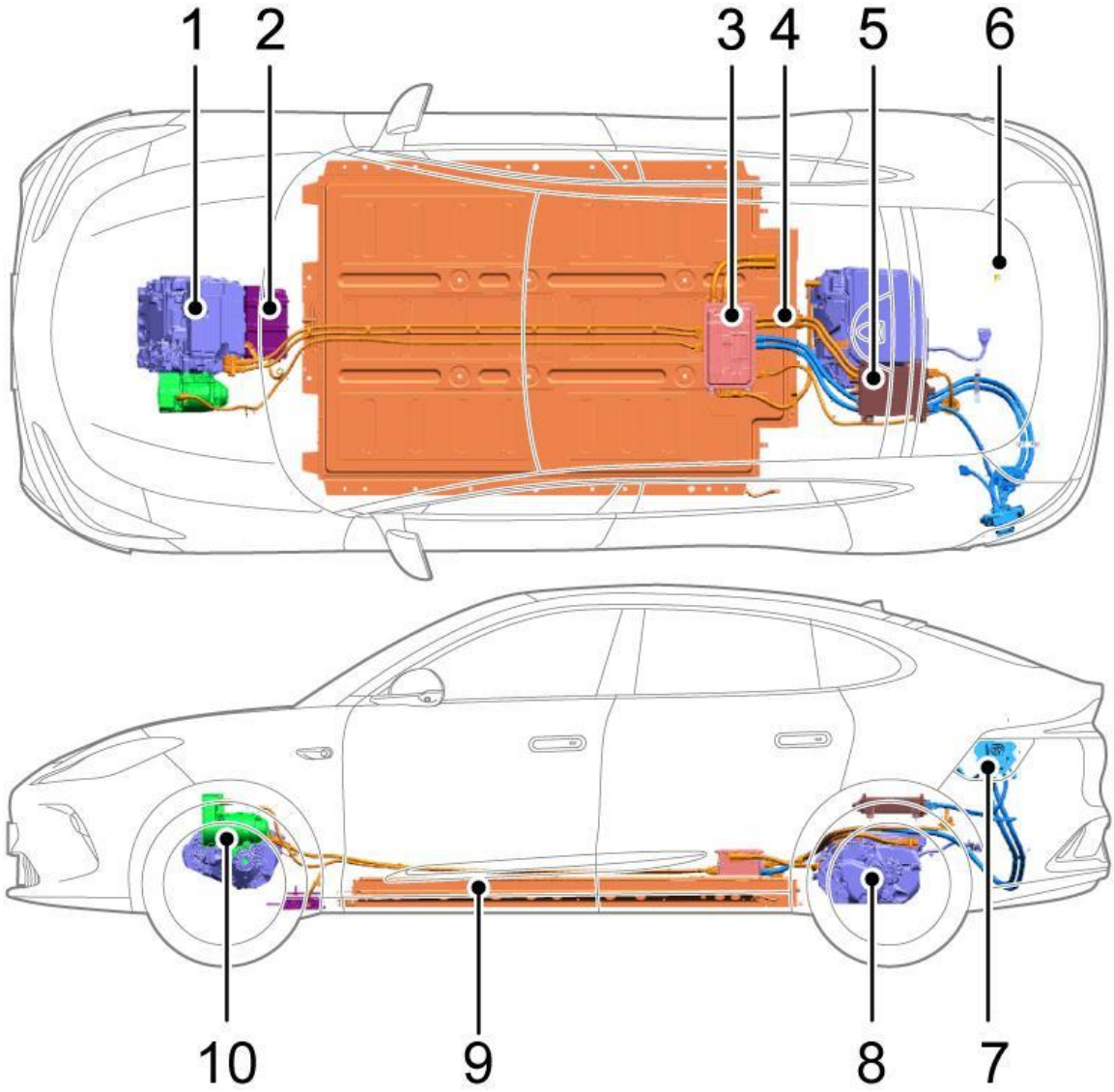

1. Front electric drive unit

2. Battery heater

3. High-voltage power distribution unit

4. High-voltage harness

5. Combined charging unit

6. Manual service disconnect device

7. Charging port

8. Rear electric drive unit

9. High-voltage battery pack

10. Electric A/C compressor

Precautions in the Event of an Accident

- Ensure Park (P) is selected and turn off the vehicle power supply.
- To avoid electric shock DO NOT touch any exposed wiring or high voltage components.
- If the vehicle is on fire and the fire is small and slow, a carbon dioxide extinguisher can be used to put out the fire, contact the fire department as soon as possible. In cases of larger fires, the user should immediately evacuate and stay a safe distance away from the vehicle and contact the fire department.
- In accidents involving collisions, the vehicle must not be re-started, and the 12V low-voltage battery negative terminal and the manual service disconnect should be disconnected before rescue.
- When the vehicle is completely or partially submerged in water, the user should switch off the power supply and evacuate the vehicle immediately.. The 12V low-voltage battery negative terminal and the manual service disconnect should be disconnected before transporting the damaged vehicle. If there is no hissing or foaming from the high-voltage battery pack of the water-logged vehicle, it can be salvaged by a professional agency. Any rescue attempts must be suspended until the hissing and foaming has ceased in order to reduce the risk of electric shock.
- After rescue, the damaged vehicle and high-voltage battery pack must be handled correctly and by qualified personnel, contact an Authorised Repairer for advice on process and disposal.
- The vehicle is provided with a rescue information card. Please present this card to the rescue personnel when they arrive.
- If the accident causes severe damage to the vehicle body, and it is necessary to conduct cutting, welding and paint spraying of body panels, in order to avoid damage to the high-voltage battery pack, please contact an Authorised Repairer for advice on any related operations after the removal of the high-voltage battery pack.

Driving Range

The driving range of your vehicle depends on many factors, these include the available power, vehicle age (current remaining battery life), weather, temperature, road conditions and driving habit etc.

Caution:

- The driving range is related to the depth of discharge (DOD). When the low battery warning lamp of high-voltage battery pack on the instrument pack illuminates, please recharge the battery as soon as possible to avoid high DOD affecting the performance of the high voltage battery pack.
- The actual driving range of the vehicle will reduce with the increase of vehicle age.
- The use of air conditioning will reduce the driving range.
- The driving range varies with the speed.
- When the vehicle is used at low temperatures, the driving range will decrease due to temperature characteristics of the battery.
- In cases of extreme temperature and low battery, weak acceleration or lack of power may occur due to battery characteristics.

The driving range can be increased by:

- Having the vehicle maintained regularly;
- Maintaining the correct tyre pressures;
- Using the vehicle as little as possible in extreme high or cold temperatures.
- Recharging the vehicle after use, without parking for a long period of time in winter.
- Reducing the vehicle load by removing unnecessary items;
- Turning off high-power electrical appliances such as the air conditioning, or adjusting the heating or cooling base temperature as necessary to minimise the energy consumption and increase the driving range.
- Closing the windows when the vehicle is traveling at a high speed, so as to reduce air resistance as well as power consumption.
- Keeping a steady speed.
- Depressing the accelerator pedal as lightly as possible while accelerating.
- Releasing the accelerator pedal while decelerating; under certain conditions when not applying the brake or gently applying the brake, the kinetic energy recovery system (KERS) will extend the driving range.

Use of High-voltage Battery Pack

Ambient Temperature for Using Vehicle

Since the performance of the high-voltage battery pack in the power system is related to the ambient temperature, the vehicle should be used within the temperature range of -15℃~ 45℃, so as to ensure the vehicle is in the optimum working state and to extend the service life of the high-voltage battery pack. Extremely high or low temperatures will affect the performance of the high-voltage battery pack and vehicle.

Equalisation Charging

In order to assist in extending the service life of the high-voltage battery pack, it is recommended that AC charging should be used to reach full state of charge at regular intervals to allow the equalisation of battery pack.

After an equalising charge, the voltage of each battery cell is basically the same, so as to ensure the overall performance of high-voltage battery pack.

Crash Outage Control

If a crash occurs, a signal from the SDM will disconnect the relays within the high-voltage battery back to cut off the high-voltage output of the high-voltage battery pack.

Instructions for Recycling High-Voltage Battery Packs

The high-voltage battery pack is installed in the chassis of the car and contains many lithium battery cells. Improper disposal may cause environmental pollution and harm. Please be sure to refer to the following information or requirements for recycling and disposal by the manufacturer.

- Personnel Requirements: Any dismantling or recycling of batteries must only be carried out by qualified professionals.
- High Voltage Safety: The high-voltage battery pack installed in the vehicle contains high-voltage components such as lithium battery modules and high-voltage wiring harnesses. Do not attempt to dismantle any part of this system. Repair work must be carried out by trained professionals with proper insulation safety protection in place.
- Transportation: The high-voltage battery pack is classified as Class 9 dangerous goods and must be transported by transportation companies with relevant qualification in each country.
- Storage: Removed high-voltage components (including the high-voltage battery pack) should be stored in a normal temperature, dry environment, away from flammable materials, heat sources, water sources, and other hazards.
- Internal Composition: The high-voltage battery pack consists of a series of components such as lithium batteries (modules), circuit boards, high and low voltage wiring harnesses, and a metal casing.

It is strongly recommended that the used high-voltage battery pack generated from vehicle scrappage or any other reasons should be disposed of by an Authorised Repairer.

Note: Instructions: If you decide not to use the recommended Authorised Repairer to dispose of your high voltage battery, the responsibility of the consequences of environmental pollution or accidents must be borne by the owner.

12V Battery Automatic Charging Function

When the vehicle is powered off and the system detects that the 12V battery is running low, the vehicle will automatically charge the 12V battery under certain safety conditions to prevent the vehicle from failing to start due to low battery. This function will be automatically turned off upon completion of charging.

Note: When the system detects a fault/vehicle starting/charging with an external device, it will automatically exit the 12V battery automatic charging function.

Note: When the system automatically charges the 12V battery, the driving range of the vehicle will be reduced.

Note: This function will be temporarily disabled when the high-voltage battery pack is running low.

Before Using the Vehicle

Vehicle Overview

Appearance Introduction

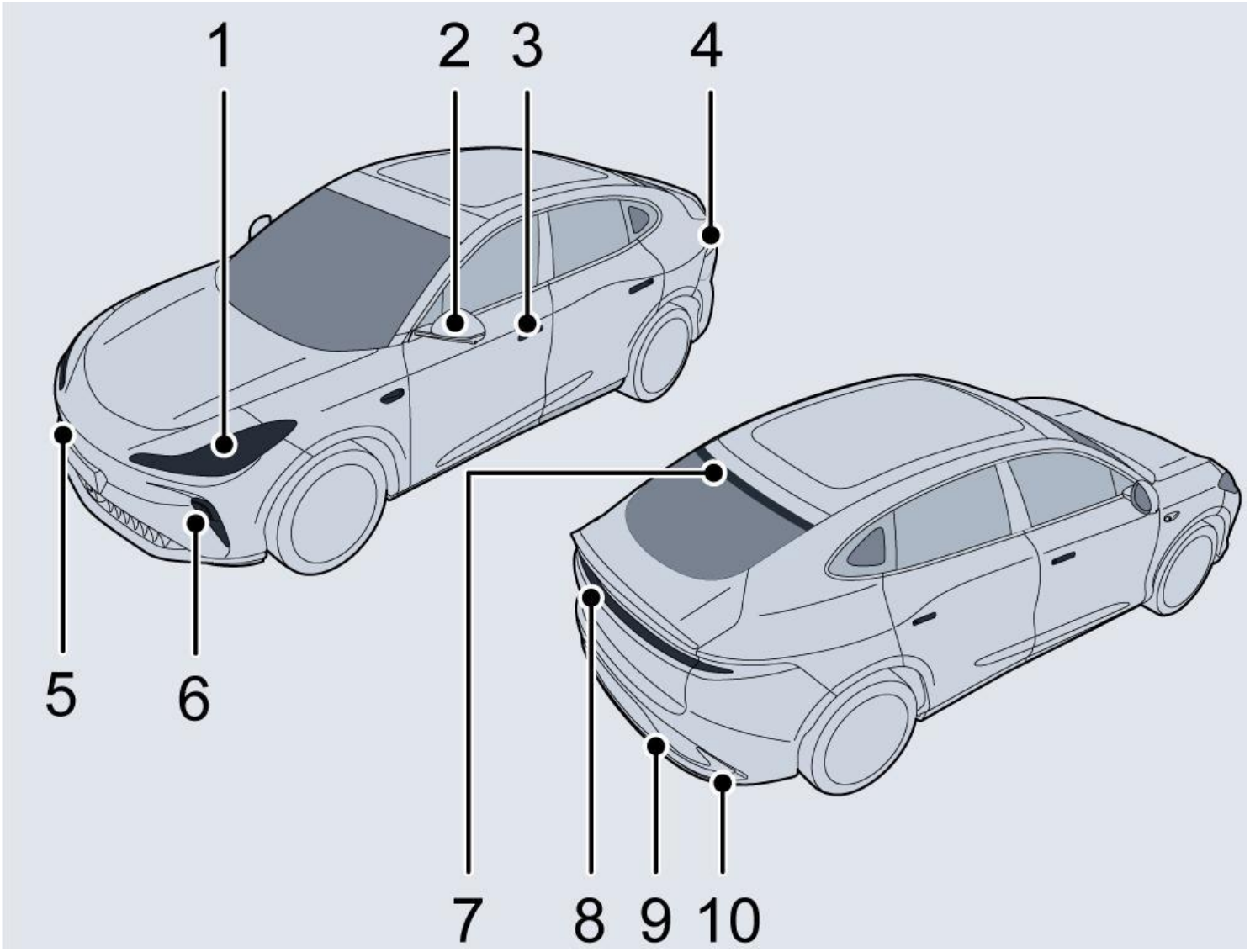

1. Front combination lamp
2. Exterior rearview mirror
3. Outer door handle
4. Charging port
5. Front towing eye access point
6. Front fog lamp
7. High-mounted stop lamp

8. Rear combination lamp

9. Reverse lamp

10. Rear fog lamp

Interior Introduction

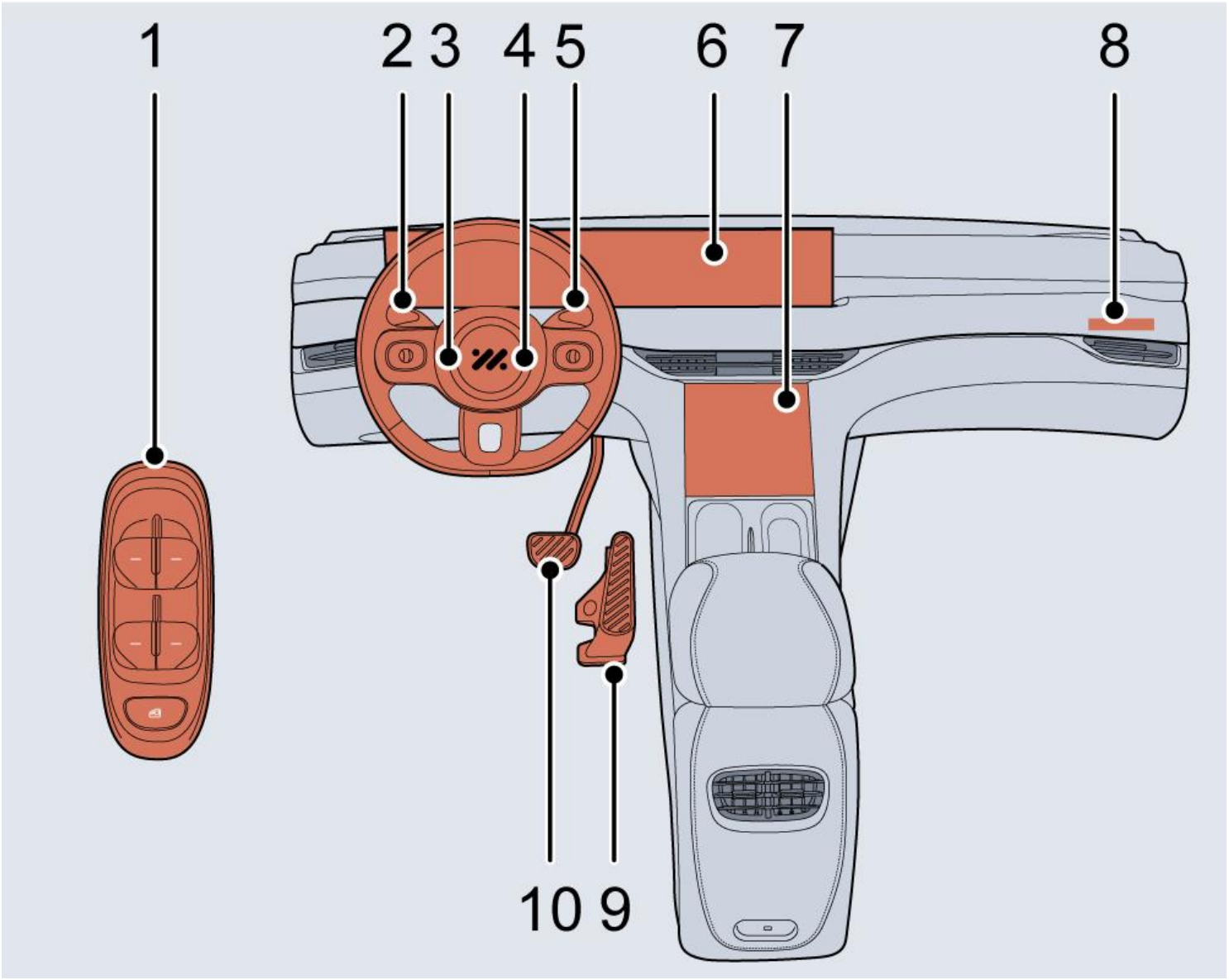

1. Power operated window switch
2. Light and wiper stalk switch
3. Horn button
4. Driver airbag
5. Gear shift lever switch
6. Driver display screen
7. Central touch screen
8. Front passenger airbag
9. Accelerator pedal

10. Brake pedal

Switch Identification

Switch Identification	Name	Switch Identification	Name
	High beam		Direction indicator switch
	Low beam		Fast speed wipe
	Single wipe of front wiper		Slow speed wipe
	Front screen wash		Wipers off
	Hazard warning lamp		Automatic wipe
	Door lock switch		Rear window disabled
	Door open switch		E-Call

Keys

Smart Key

A smart key and an NFC card are provided that can operate all locks of the vehicle. A mechanical key blade is also provided, which can be used to unlock the door mechanically in emergency.

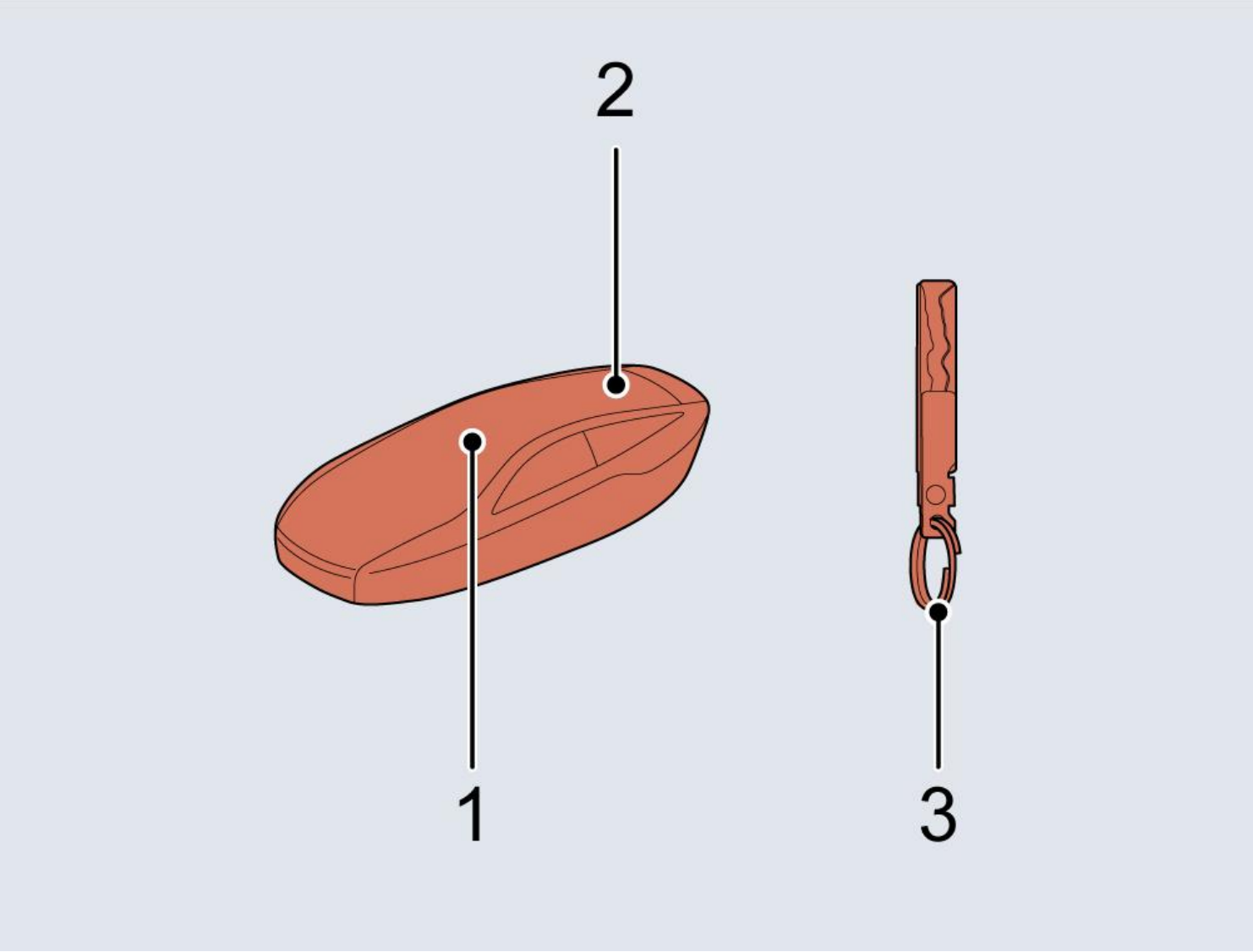

1. Door lock/unlock button

2. Tailgate button

3. Spare key

The smart key will only work within a certain range. Its working range is sometimes influenced by the key battery condition, and physical and geographical factors. For safety consideration, after locking the doors using the smart key, please recheck that the vehicle is locked.

Note: When operating your vehicle with the smart key, avoid placing it near the devices with strong radio interference (such as notebook computers and other electronic products), or the normal function may be affected.

Note: If your car is equipped with induction-type wireless charging function, always keep the key more than 20 cm away from the

mobile phone which is being charged to prevent the key from being subject to any interference from the wireless charging device.

IMPORTANT
The smart key contains delicate circuits and must be prevented from impact, high temperature, humidity, direct sunlight and liquids.

Replacing smart key

The keys supplied to you have been programmed to the security system on your vehicle. Any key that is not programmed to your vehicle can not start the vehicle.

If your key is lost/stolen or broken, a replacement can be obtained from an Authorised Repairer. The lost/stolen key will lose the function of starting the power system. If the lost key is found, the After-sales Repairer can reactivate it.

Note: Any key made independently outside of the Authorised Repairer Network may not start the power system, and may affect the safety of your car. To obtain a suitable key replacement, it is recommended that you can consult an Authorised Repairer.

Note: The new key cannot be offered to you immediately because it requires programming to the vehicle by the Authorised Repairer.

Replacing the Smart Key Battery

Please replace the smart key battery if you experience any of the following conditions:

- The effective locking/unlocking function range of the smart key is obviously reduced.
- The anti-theft system warning lamp flashes.

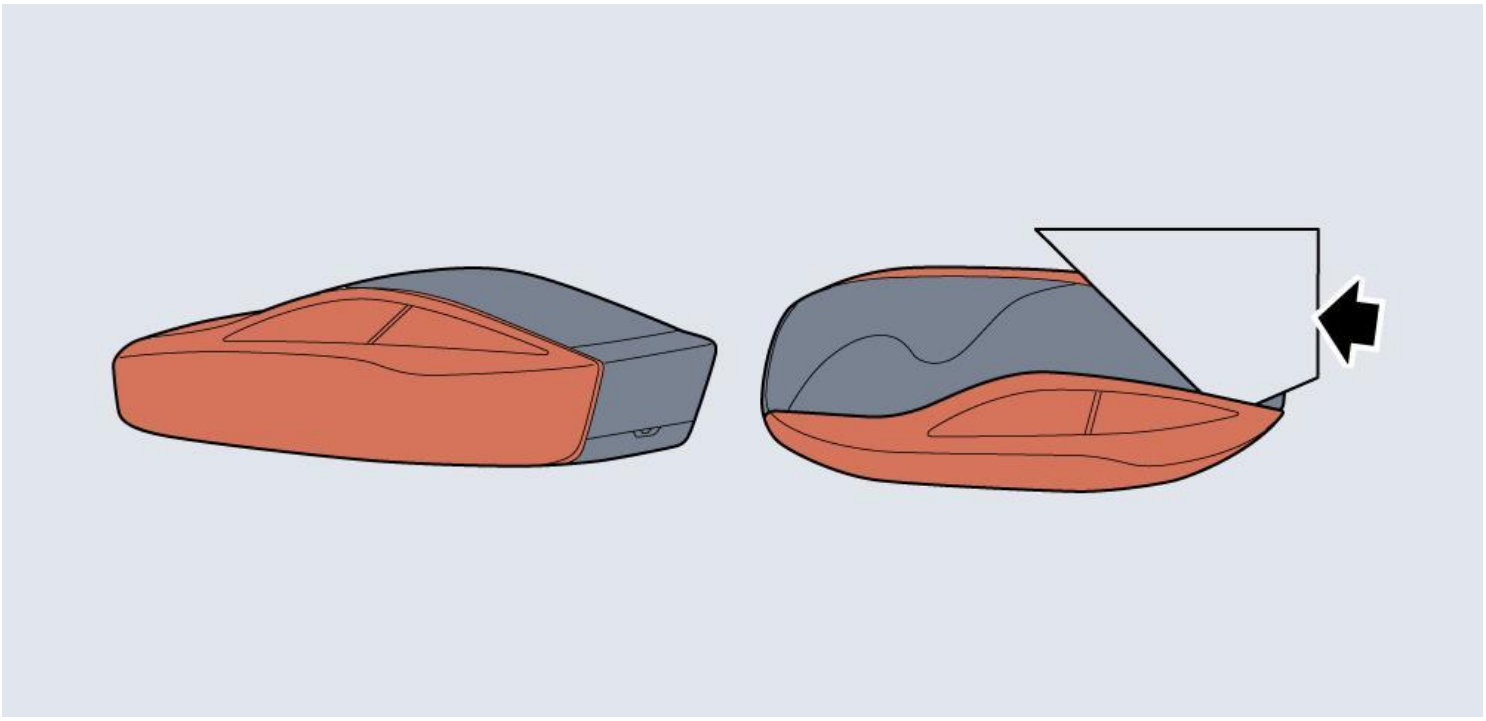

1. Side cover removal: Using a hard card, such as a bank card, insert the corner of the card into the gap between the side cover and key body (as indicated by the arrow). Twist or tilt the card to release the side covers.

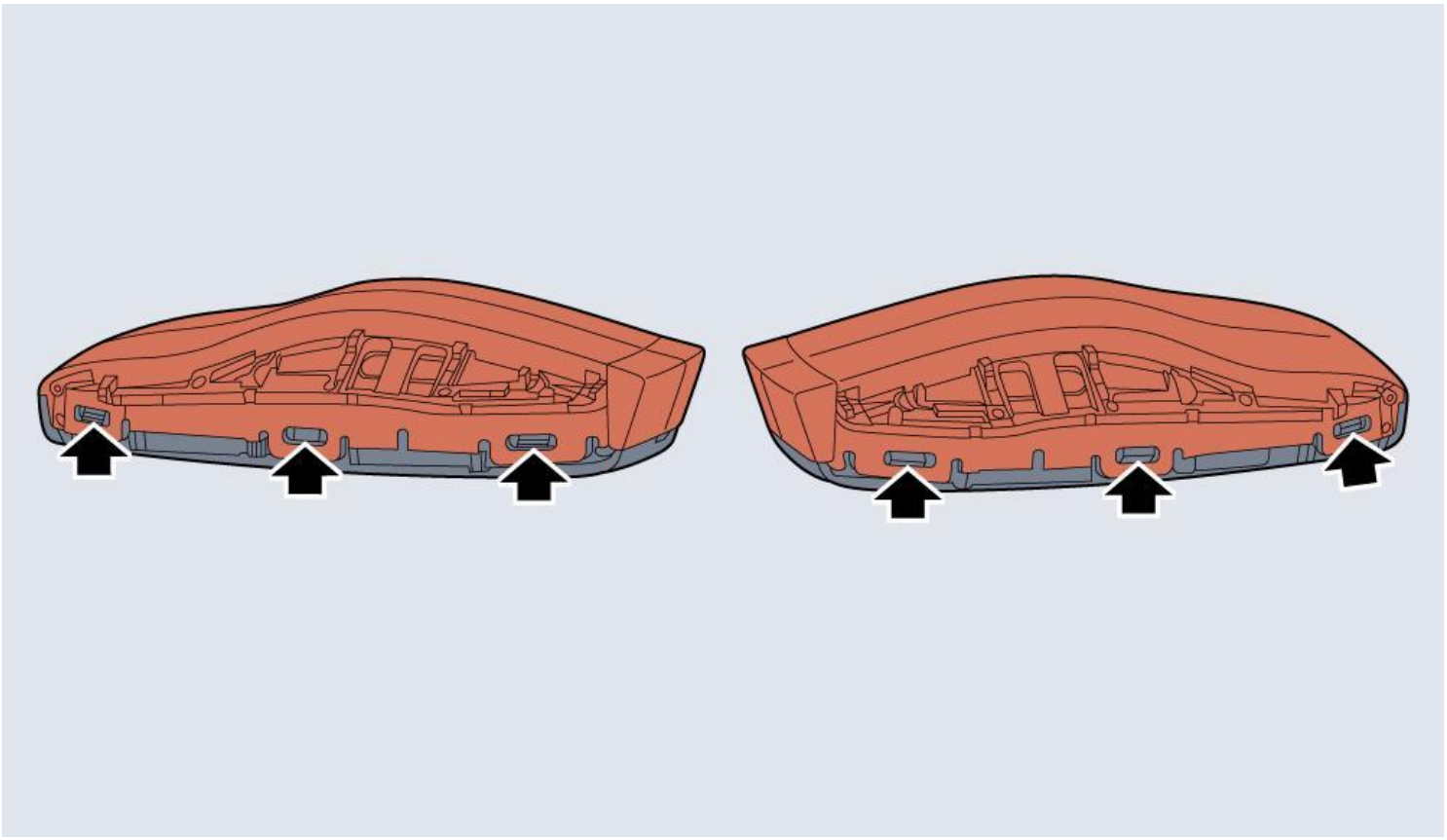

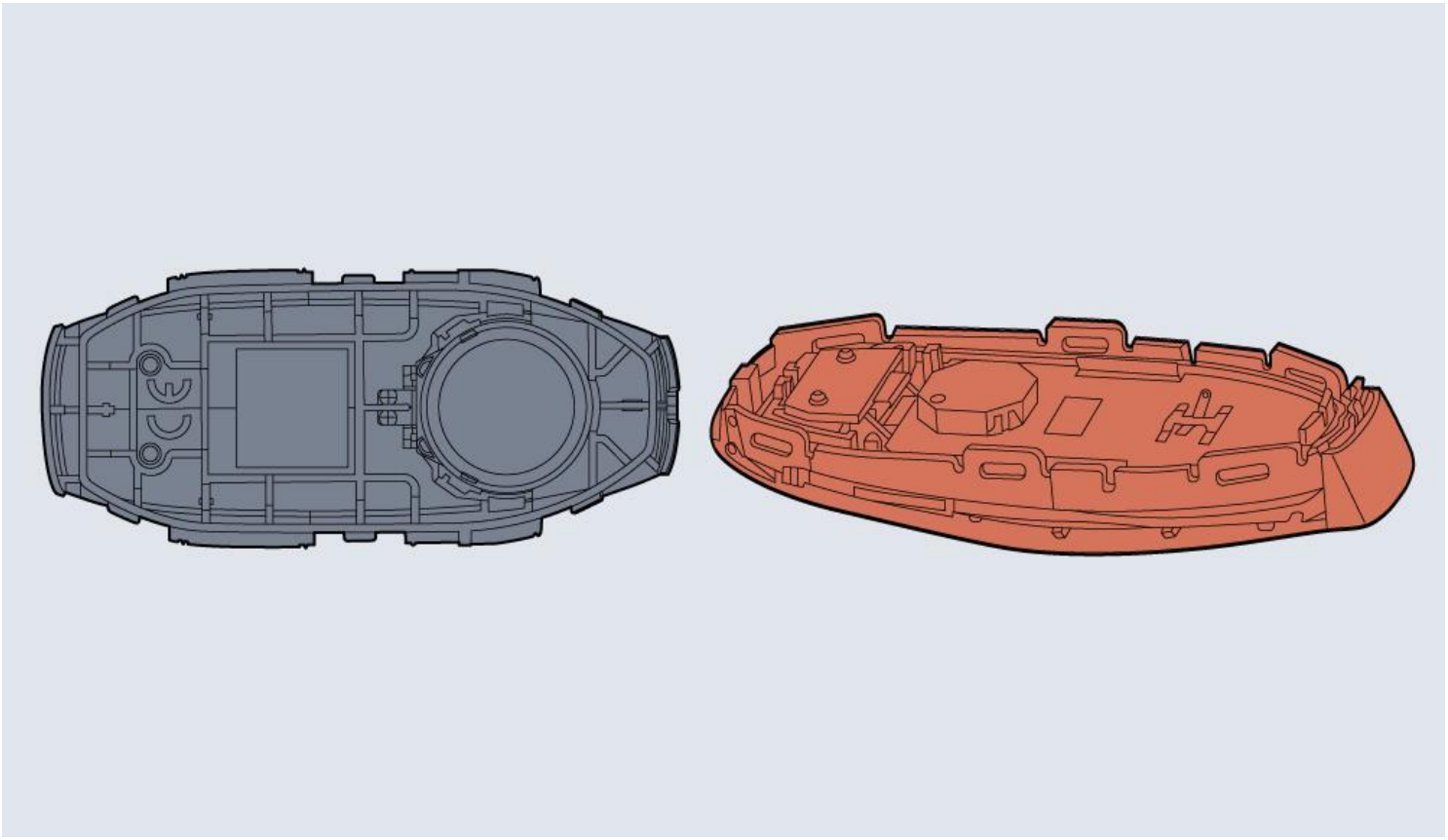

2. Use a small flat-head screwdriver or a similar tool to gently pry up the 6 clips (as shown by the arrow) fixing the surface cover to the bottom cover, and remove the bottom cover.

3. Remove the battery(as shown by the arrow) from the battery cover slot.

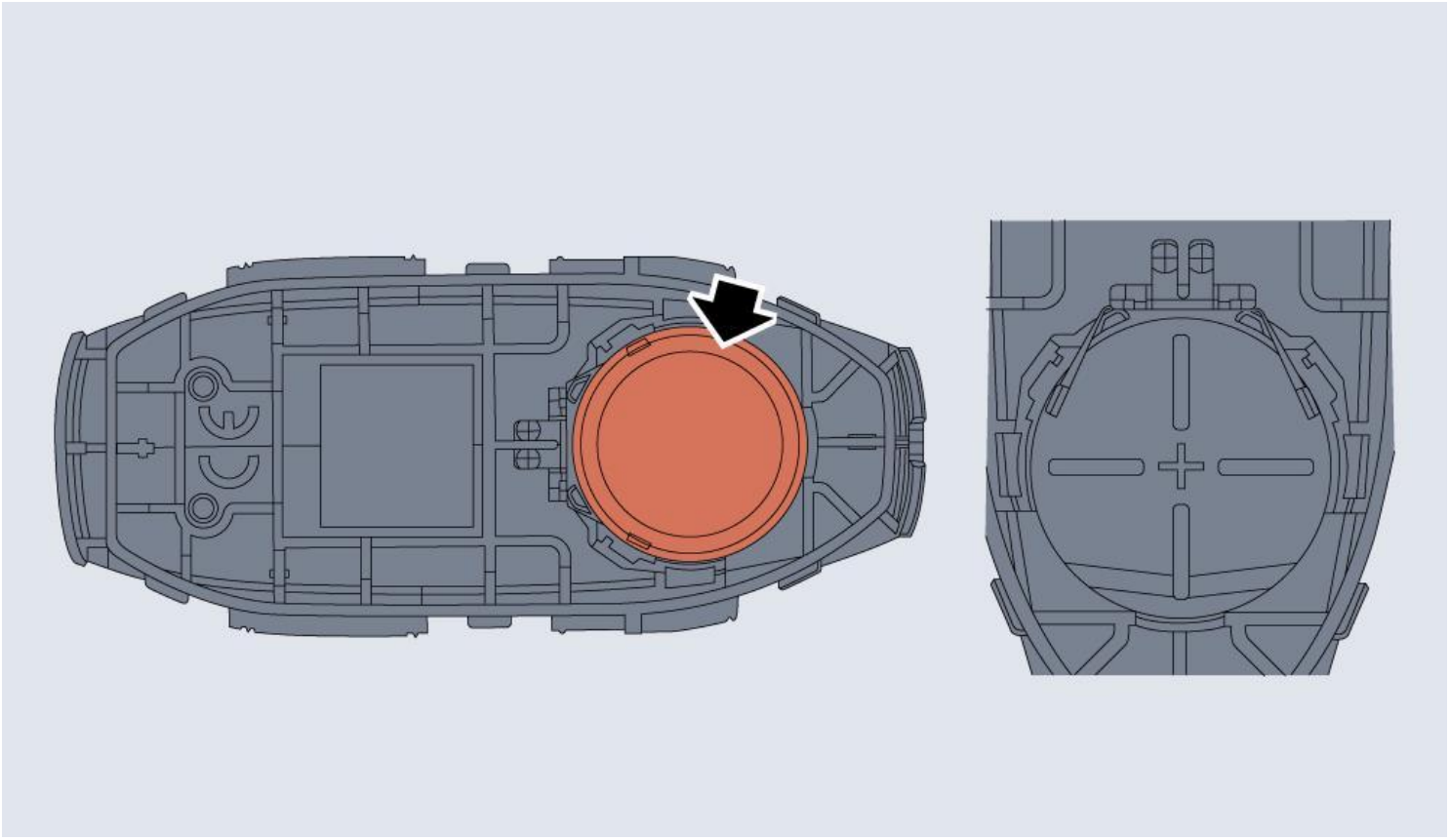

4. Place a new battery in the slot and make sure it is in correct and full contact with the battery cover.

Note: Make sure that the polarity of battery is correct ('+' side facing down).

Note: It is recommended to use a CR2032 battery.

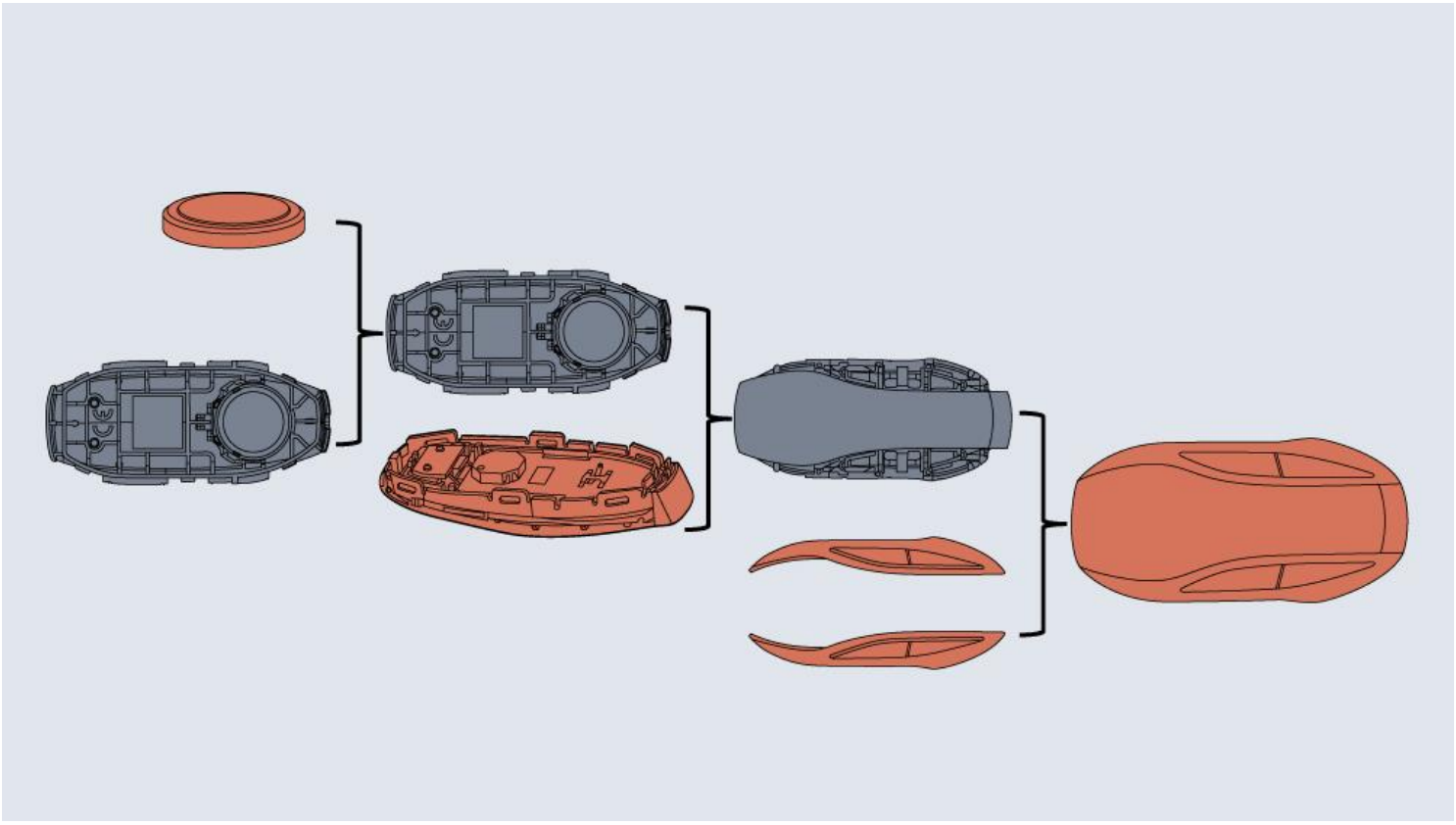

5. Position the surface cover on the bottom cover, align the corresponding 6 clips with the holes and gently press together,, install the left and right side plates, press firmly, and check whether the surrounding clearance is uniform.

6. Start the vehicle to resynchronize the key with the vehicle.

IMPORTANT

- Use of an incorrect or inappropriate battery may damage the smart key. The replacement battery's rated voltage, sizes and specifications must be the same as those of the old one.
- Incorrect fitting of the battery may damage the key.
- Disposal of the used battery must be strictly in accordance with relevant environmental protection acts.

Starting the Power System

Power Immobilisation

The power immobilisation system is designed to safeguard the vehicle from theft. The vehicle cannot be started until the immobiliser is deactivated.

If the immobiliser has been activated, before it is turned off, the vehicle horn will sound continuously. Short press the Lock/Unlock button on the smart key or use the NFC card to unlock the vehicle,, the anti-theft alarm will be deactivated.

If the instrument pack displays "No Smart Key Found" or "Please Put the Key in Standby Starting Position" or the anti-theft system warning lamp is on, please put the smart key in the standby starting position (refer to "Standby Starting Procedure" in "Powering On/Off the Vehicle" of "Before Using the Vehicle" section), or try to use the spare key. If the vehicle is still unable to start, please contact an Authorised Repairer.

Locking and Unlocking from Outside

When the vehicle is locked, the indicator lamps illuminate three times; when it is unlocked, the indicator lamps illuminate once.

Operation of Door Lock System (Keyless)

The keyless entry system can lock and unlock the doors or open the tailgate as long as you have the smart key in your possession and are within a certain distance of the vehicle.

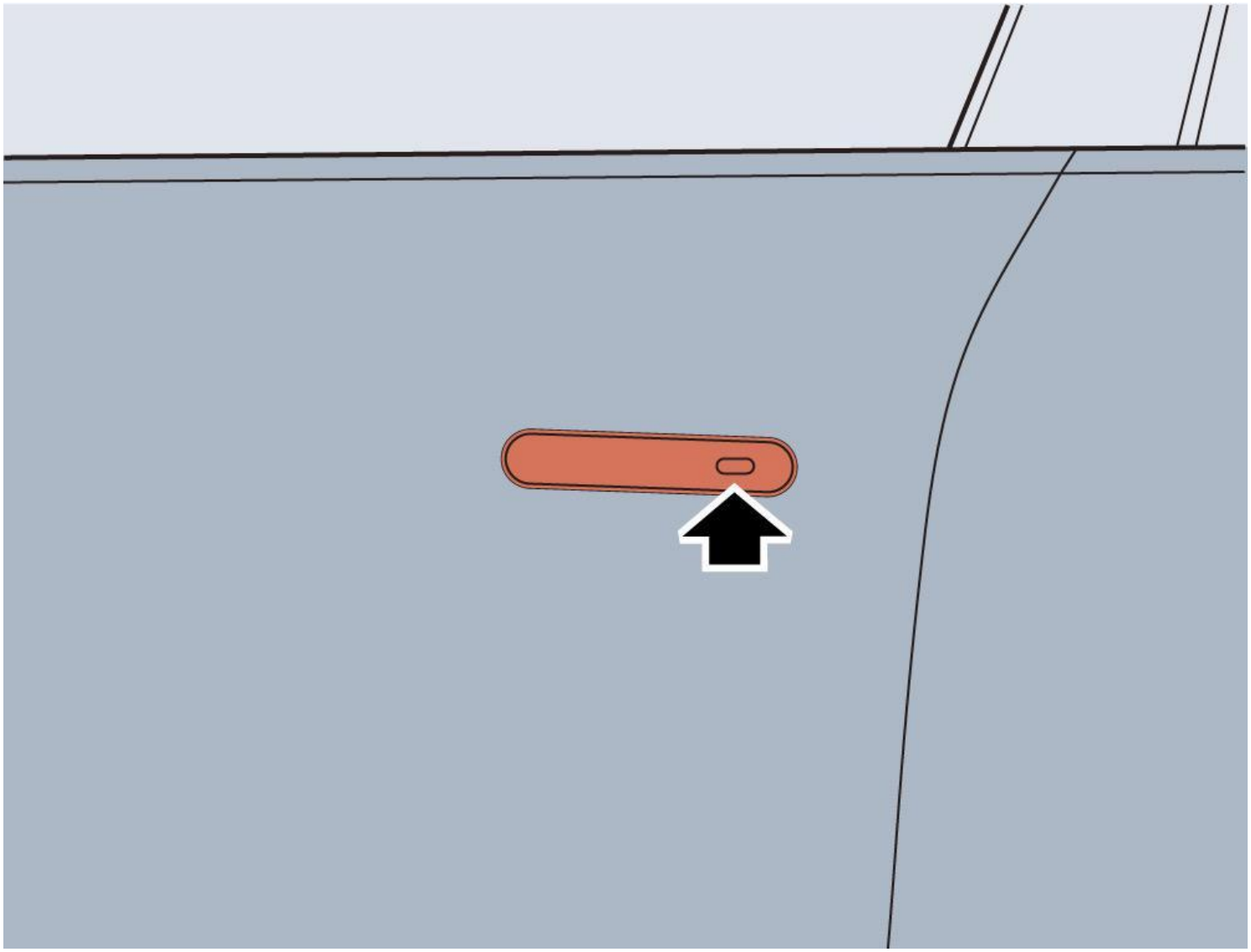

IMPORTANT
Ensure the distance between the smart key and the door handle is within the 1.5 metre range in order to lock and unlock the doors using the keyless function.

Keyless locking

Touch the sensing area on the front door handle once (no need to lock with the smart key) to lock all doors before leaving the vehicle, the vehicle will then enter the anti-theft alarm state.

Keyless unlocking

Touch the sensing area on the front door handle once to unlock the vehicle, and then pull the door handle to open the door.

Note: With the vehicle in locked state, after touching the sensing area on the front door handle, and performing no other operations within a period of time, the vehicle will automatically lock.

IMPORTANT
After the door is locked by using the key, touching the sensing area on the door handle will unlock the vehicle. If the vehicle cannot be unlocked or locked normally, contact an Authorised Repairer.

Operation of Door Lock System (Key)

Smart Key

Using the remote key to lock/unlock: short press the lock/unlock button to lock the vehicle after closing the doors, bonnet and tailgate; short press the lock/unlock button again to unlock the vehicle.

Note: When the vehicle is locked, use the remote key to unlock; if no other operations are carried out within a period of time, the vehicle will automatically lock.

Mechanical Key

Using the mechanical key to lock/unlock: pull open the driver side door handle, and insert the key into the lockhole. Rotate clockwise to lock the vehicle; rotate anti-clockwise to unlock the vehicle.

Note: After unlocking the vehicle with the mechanical key if you do not sit in the driver seat (place power on) or operate the locking system with the smart key or NFC card, then the alarm will sound after a short time.

NFC Card

Lock: With the vehicle unlocked, after exiting the vehicle and closing all doors, bonnet and tailgate, use a valid NFC card to touch the NFC card swiping area on the B Pillar exterior trim panel on the driver side, hold in place for several seconds and the vehicle will lock.

Unlock: With the vehicle in a fully locked and armed state, use a valid NFC card to touch the NFC card swiping area on on the B Pillar exterior trim panel on the driver side, hold in place for several seconds, the vehicle will unlock.

Mislock

If a locking operation is performed when the driver's door is not fully closed, the vehicle will not be locked, and the horn will sound once to indicate a mislock. In this case, the body anti-theft system is inoperative.

If a locking operation is performed when the driver's door is closed but the passenger's door, bonnet or tailgate is not fully closed, the vehicle horn will sound once, indicating a mislock. In this case, the body anti-theft system will be partially enabled (all fully closed doors, bonnet or tailgate will be protected, but an open aperture will not!). As soon as the open door, bonnet or tailgate is closed, the system will automatically revert to an armed state.

Interior Lock

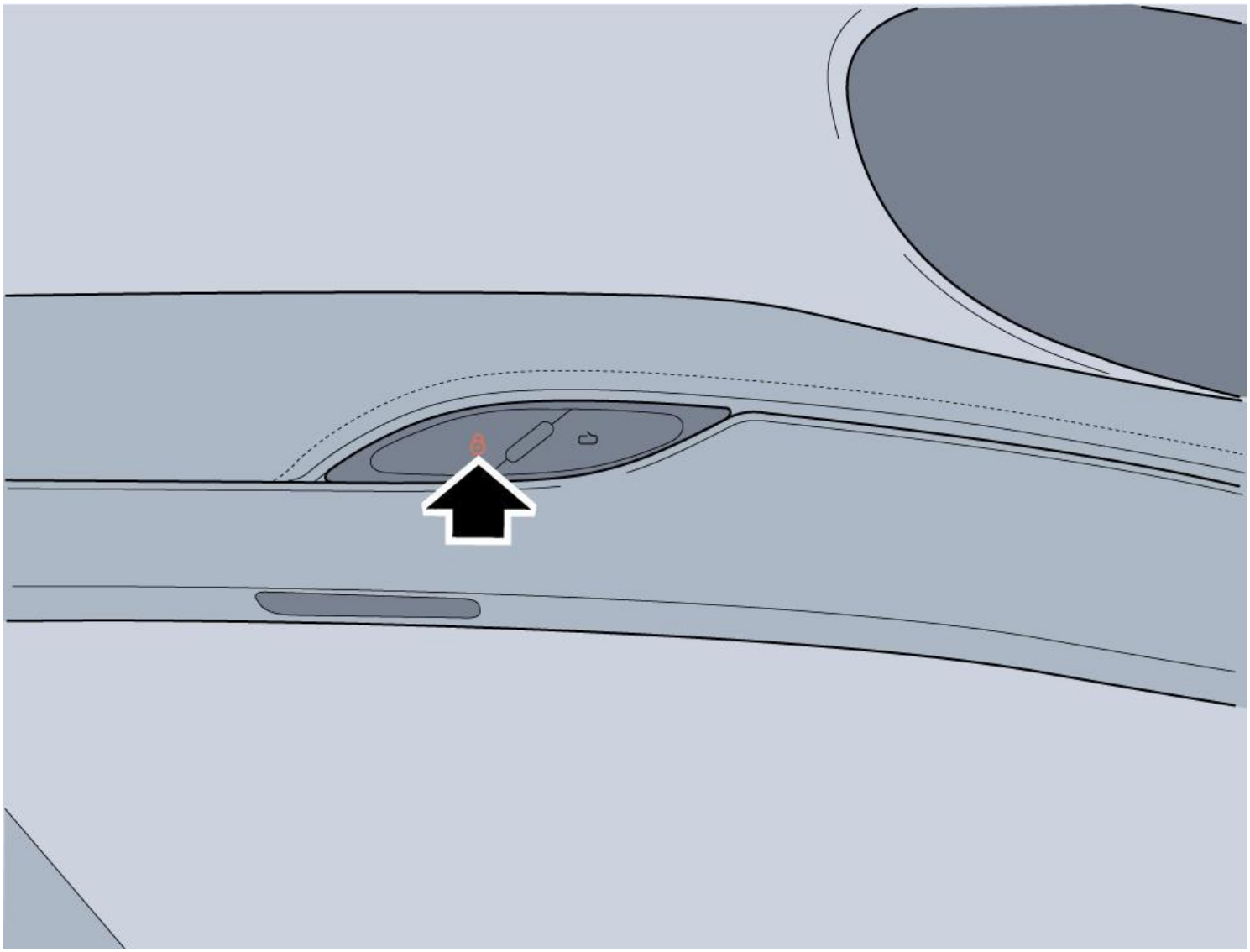

- Door lock

When the anti-theft system is not armed, short press the interior lock switch after closing doors to lock all doors.

- Door unlock

Press the Lock switch again to unlock all doors.

Note: If the anti-theft system is armed, pressing the interior button switch will not lock/unlock the doors, it will trigger the anti-theft system.

Manual Door Opening

When the vehicle is unlocked, pulling the outer door handle will open the door.

When you enter the vehicle and close the door, press the door open button on the inside of the door to open the door.

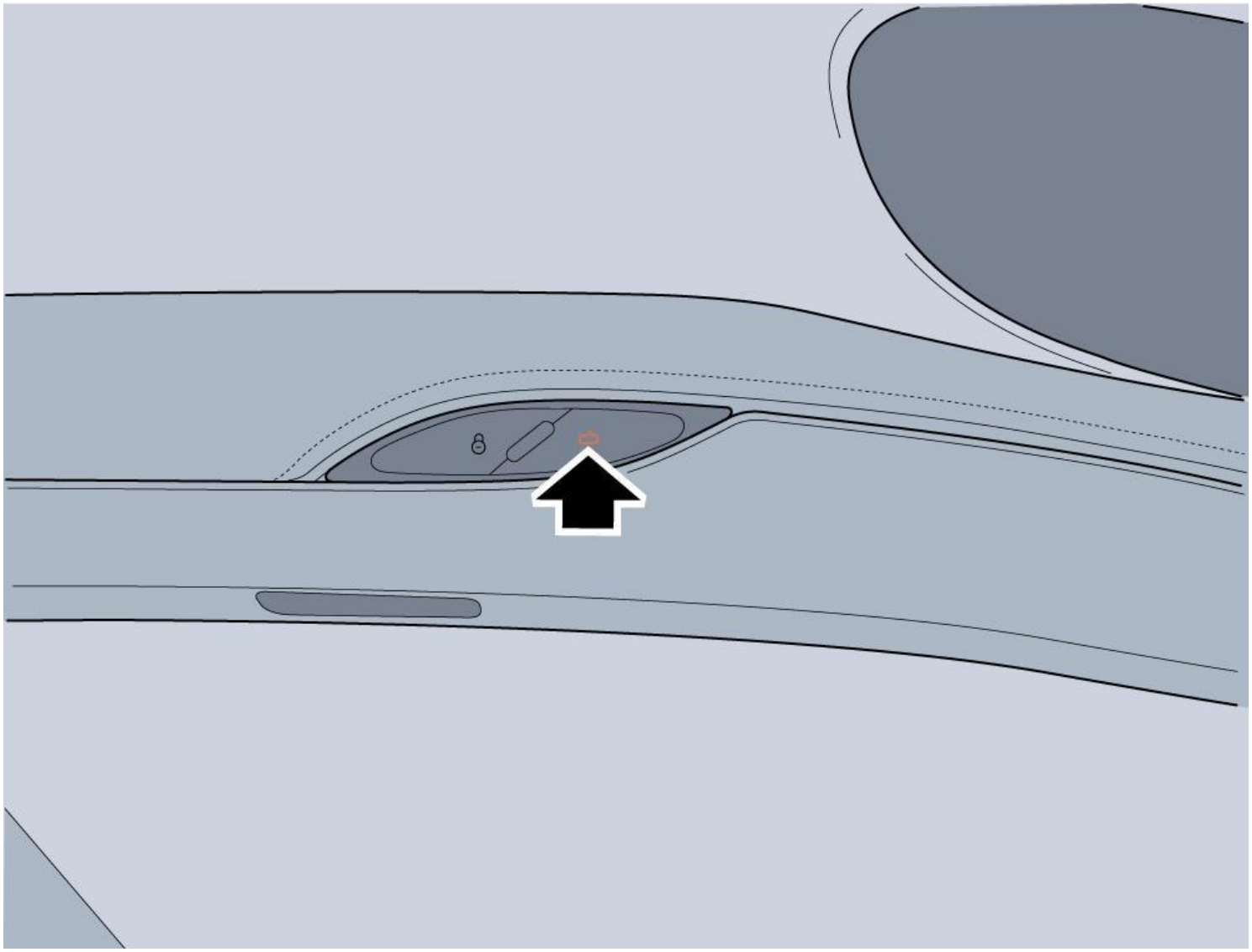

Note: When the door cannot be opened by pressing the door button or cannot be opened by any other method,, you can pull the inner emergency handle to open the door, and contact the Authorised Repairer as soon as possible.

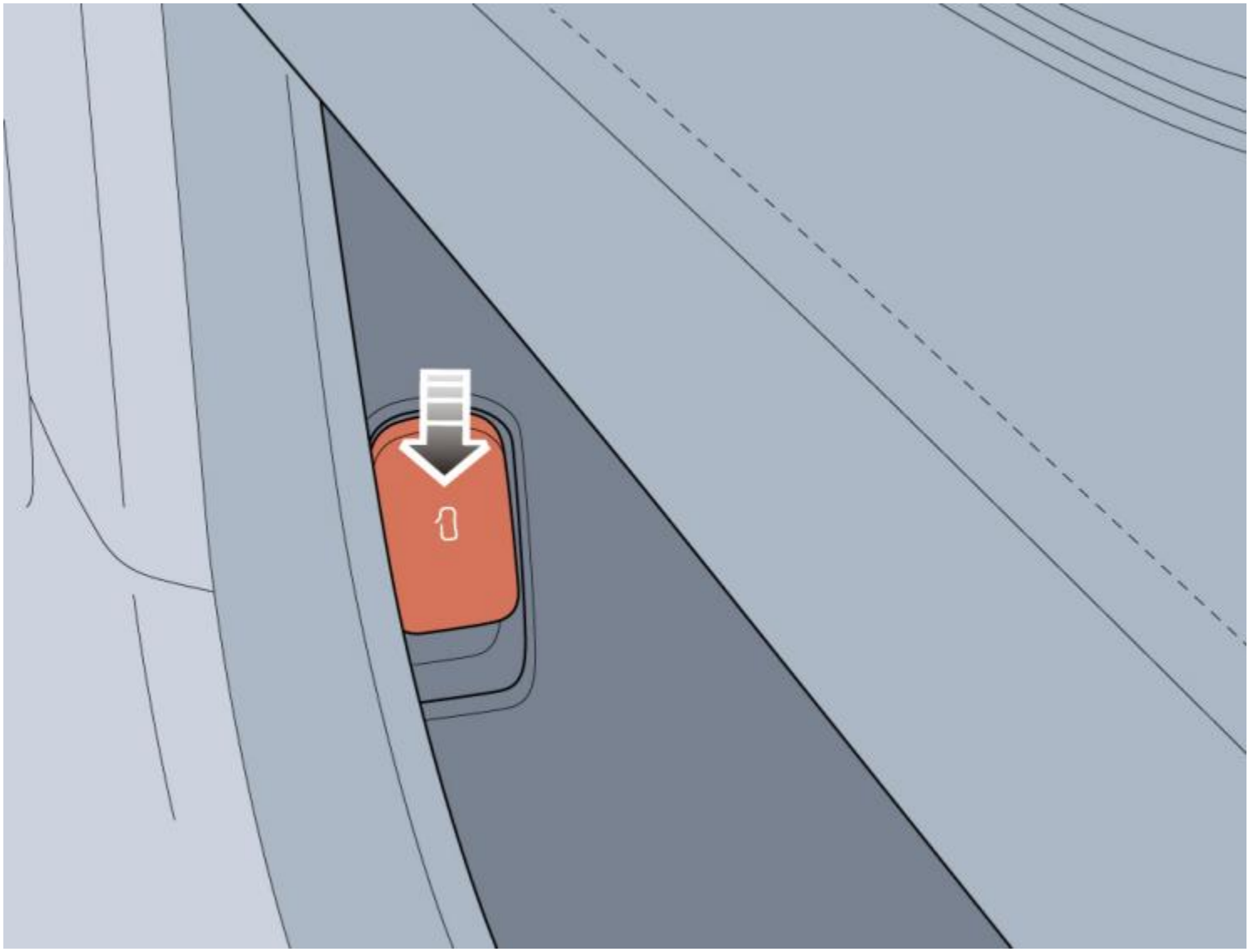

Auto Lock When Driving

All the doors will be locked automatically when the running speed exceeds a certain preset speed.

Child Lock

Warning: NEVER leave children unsupervised in the car.

Enable or disable the child lock as follows:

In the operation interface on the central screen, open "Door Lock - Child Lock" page, and select to enable or disable the child lock on the corresponding side.

With the child lock enabled, the rear door on the affected side cannot be opened from inside the vehicle, but can be opened from the outside.

Alcohol Interlocks *

Warning: The alcohol lock is a detection device used to assist in prohibiting drivers from driving when their blood alcohol concentration exceeds a preset limit. You are responsible for the safety of your passengers and other road users. Drink driving is an offence and is strictly prohibited.

To operate the alcohol lock device, hold the handheld device and blow into the mouthpiece/orifice, by providing a breath sample the blood alcohol concentration will be analised. If the levels are below the preset limit you will then be able to start the vehicle.

Note: The handheld device should be placed in a position that is easy to access and does not affect driving. Please contact an Authorised Repairer for device installation and set up.

IMPORTANT
If the alcohol test fails, for safety reasons, do not attempt to forcefully start the vehicle. If you suspect a malfunction with the alcohol lock device, please contact an Authorised Repairer for device installation and set up.

Powering On/Off the Vehicle

Starting the Power System

When you open the driver's door with valid key, and sit in the driver seat, the instrument panel and touch screen are powered on. The central screen displays the door state and state of charge, and all electric appliances are ready for operation.

Check that the doors are fully closed before driving, and then:

- Press the brake pedal to set the vehicle into Ready mode.
- Select Drive gear (or shift to Reverse gear for reversing);
- Release the brake.

Turning off the Power System

In case of an emergency, the power system can be turned off as follows when the vehicle is able to pull over safely:

1. After the vehicle is stopped, press the P gear button on the end of the gear selector stalk, the red indicator lamp in the driver screen is illuminated and the electronic parking brake is applied.

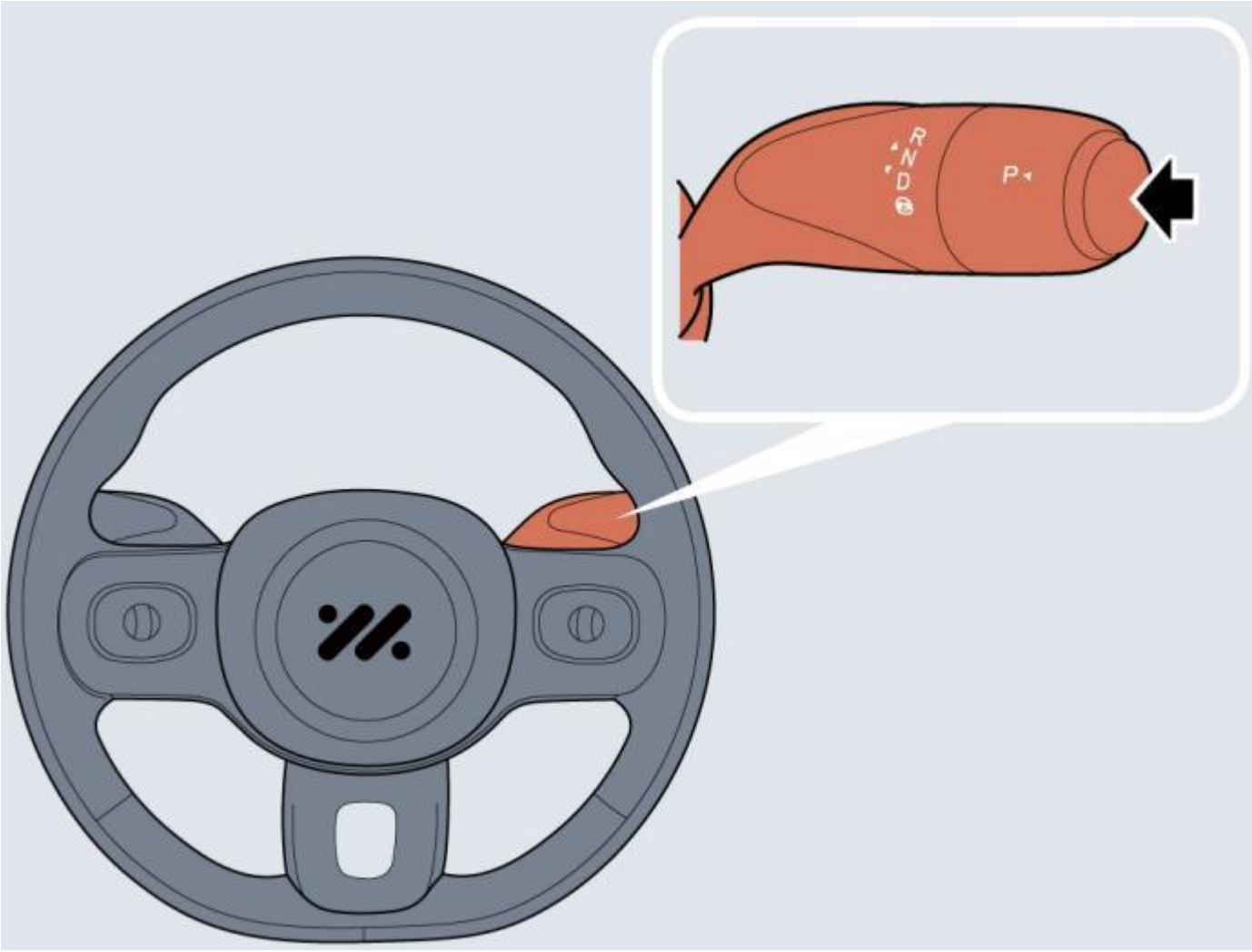

2. Tap "Settings - General - Vehicle Power Supply- Power Off" or place the NFC card on the B Pillar or use remote key to turn off the vehicle power supply.

Standby Starting Procedure

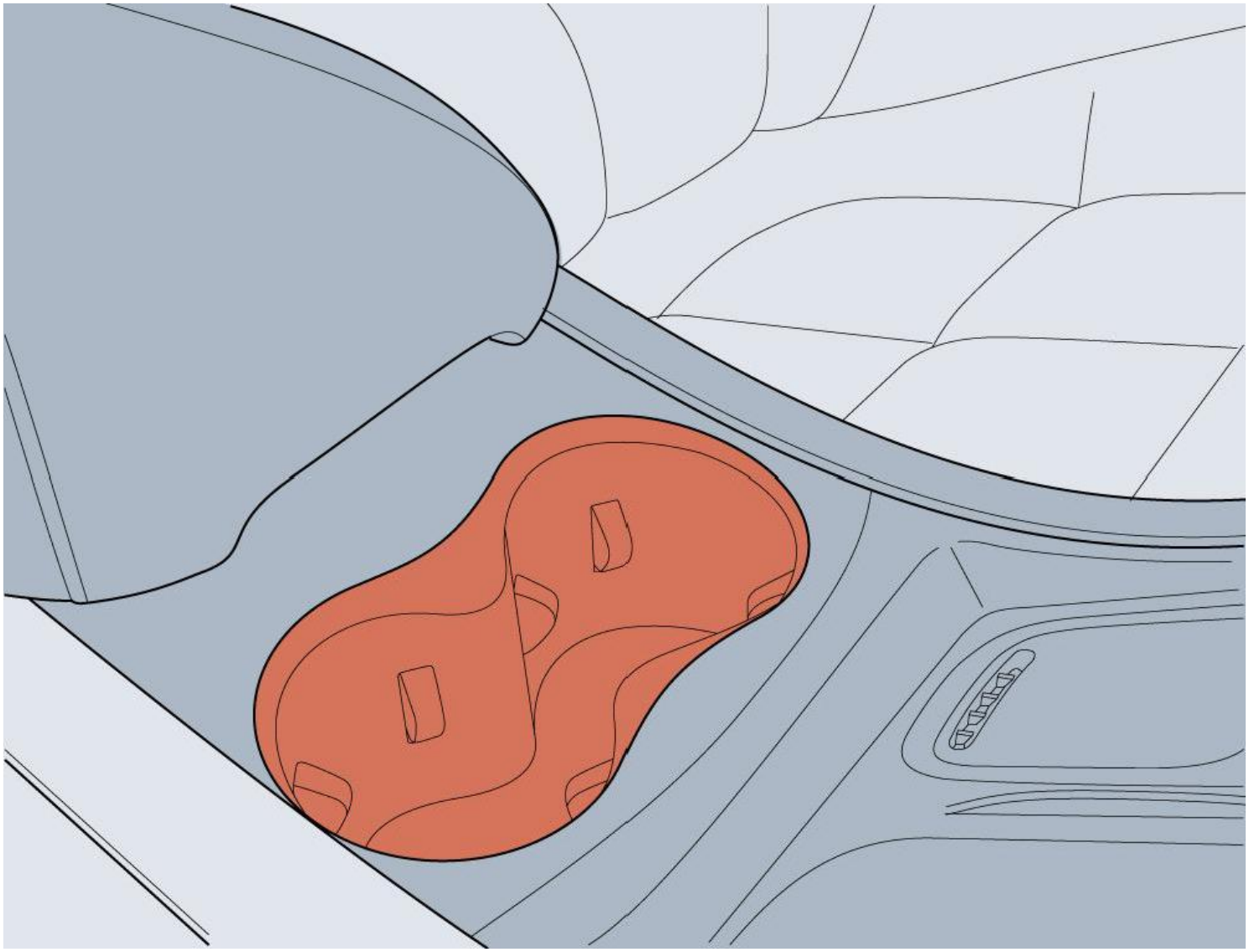

If the vehicle is subject to strong radio signal interference, or the smart key battery is low, please start the vehicle using the standby starting procedure by using the following steps:

1. Place the smart key in the position as illustrated.

2. Press the brake, and start the power system.

After the smart key battery is replaced or the vehicle leaves the interference area, if the keyless starting procedure is still inoperative, contact an Authorised Repairer.

Exterior Lighting

Exterior Light Control Interface

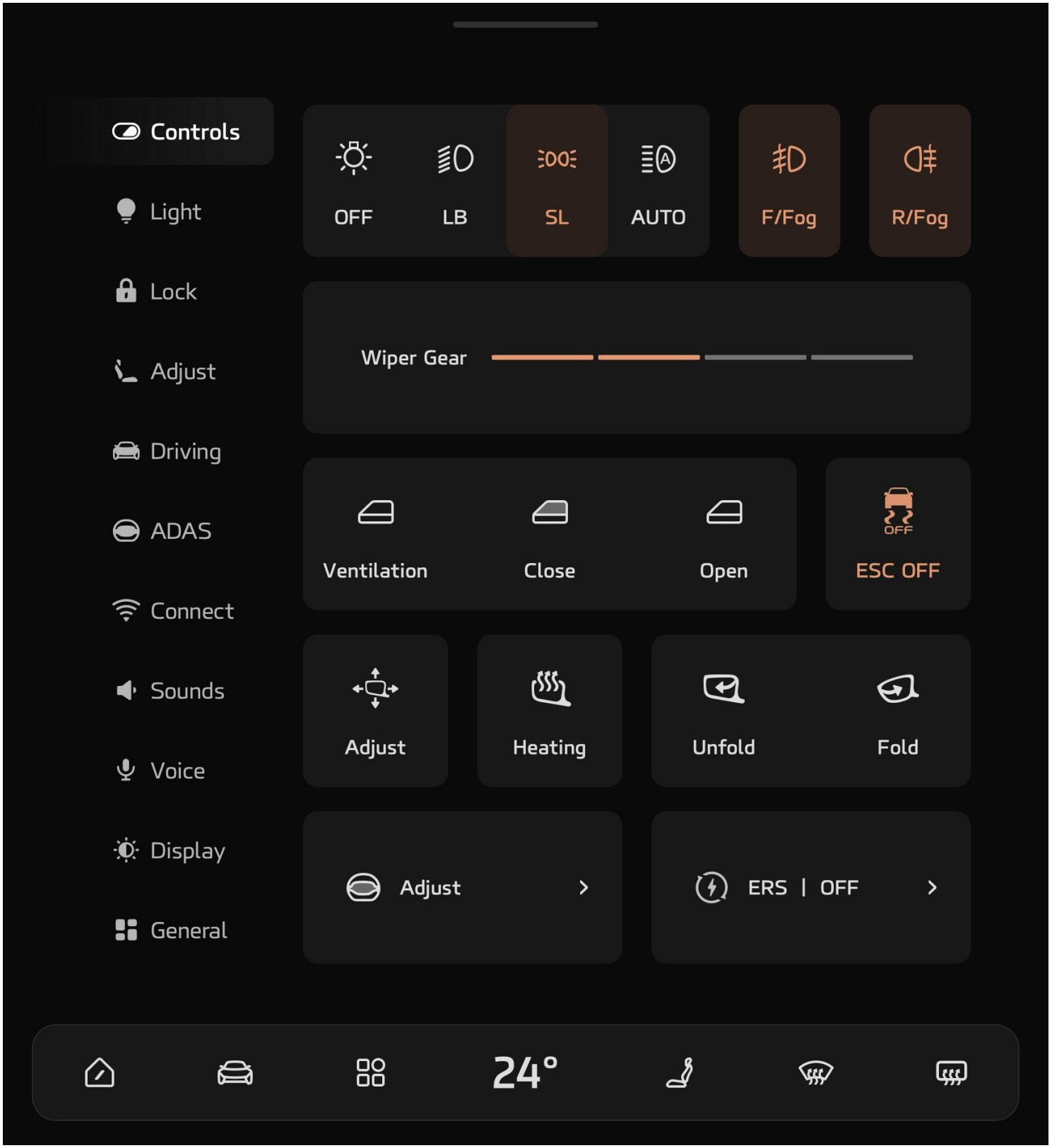

Enter the "Settings - Controls" interface on the central screen, here you can operate the exterior lights.

Exterior Light Control

- AUTO Lamp

After the vehicle is powered on, when you touch the headlamp "AUTO" button, the icon illuminates, and the AUTO lighting system will automatically illuminate the position lamps, switch backlights and low beam headlamps will switch on or off according to the intensity of current ambient light.

- Position Lamp

When you touch the "SL" button, the icon illuminates, and the daytime running lamps, rear position lamps and switch backlights illuminate.

When the driver powers off the vehicle on the centre display, and leaves the vehicle by opening the door, if the position lamps are left on, an audible alarm will sound.

- Headlamp

When you touch the "LB" button, the icon illuminates, and the low beam headlamps, width lights and switch backlights illuminate.

- Exterior Lights OFF

When you touch the "OFF" button, the icon illuminates, and the exterior lights extinguish.

- Front Fog Lamp

With headlamps on, when you touch the "F/Fog" button, the icon illuminates, and the front fog lamps illuminate. With front fog lamps on, the indicator on the instrument panel illuminates.

- Rear Fog Lamp

With headlamps on, when you touch the "R/Fog " button, the icon illuminates, and the rear fog lamps illuminate. With rear fog lamps on, the indicator on the instrument panel illuminates.

- Daytime Running Lamp

When the vehicle is powered on, the daytime running lamps illuminate automatically. When the low beam headlampsare on, the daytime running lamps extinguish automatically.

- Welcome Mode

When the vehicle is unlocked, the system will automatically illuminate the corresponding exterior lights to provide a welcome effect. The welcome light can be set in the "Settings - Light" interface on the central screen.

Switching between High Beam and Low Beam

Manual switching

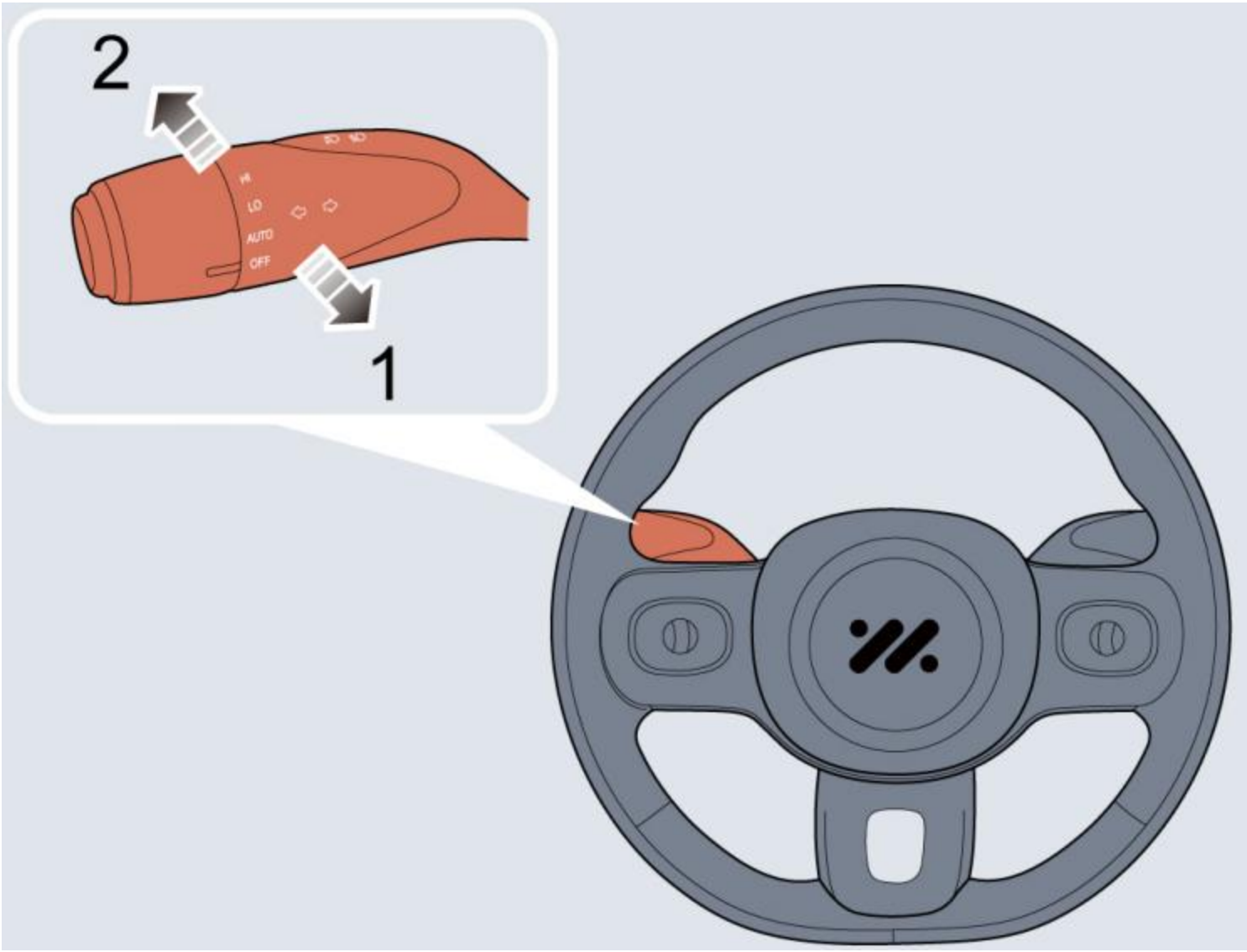

Manual switching

With the low beams illuminated, push the lever (2) towards the driver instrument screen to switch to high beam. The indicator of high beams on the driver instrument screen illuminates.

Push or pull the lever (2 or 1) once again to switch to low beams. Repeatedly pull the lever to flash the main beam lamps.

Warning: When switching between the high beam and low beam headlamps, please pay attention so as not to dazzle the driver of oncoming vehicles.

Indicator lamp

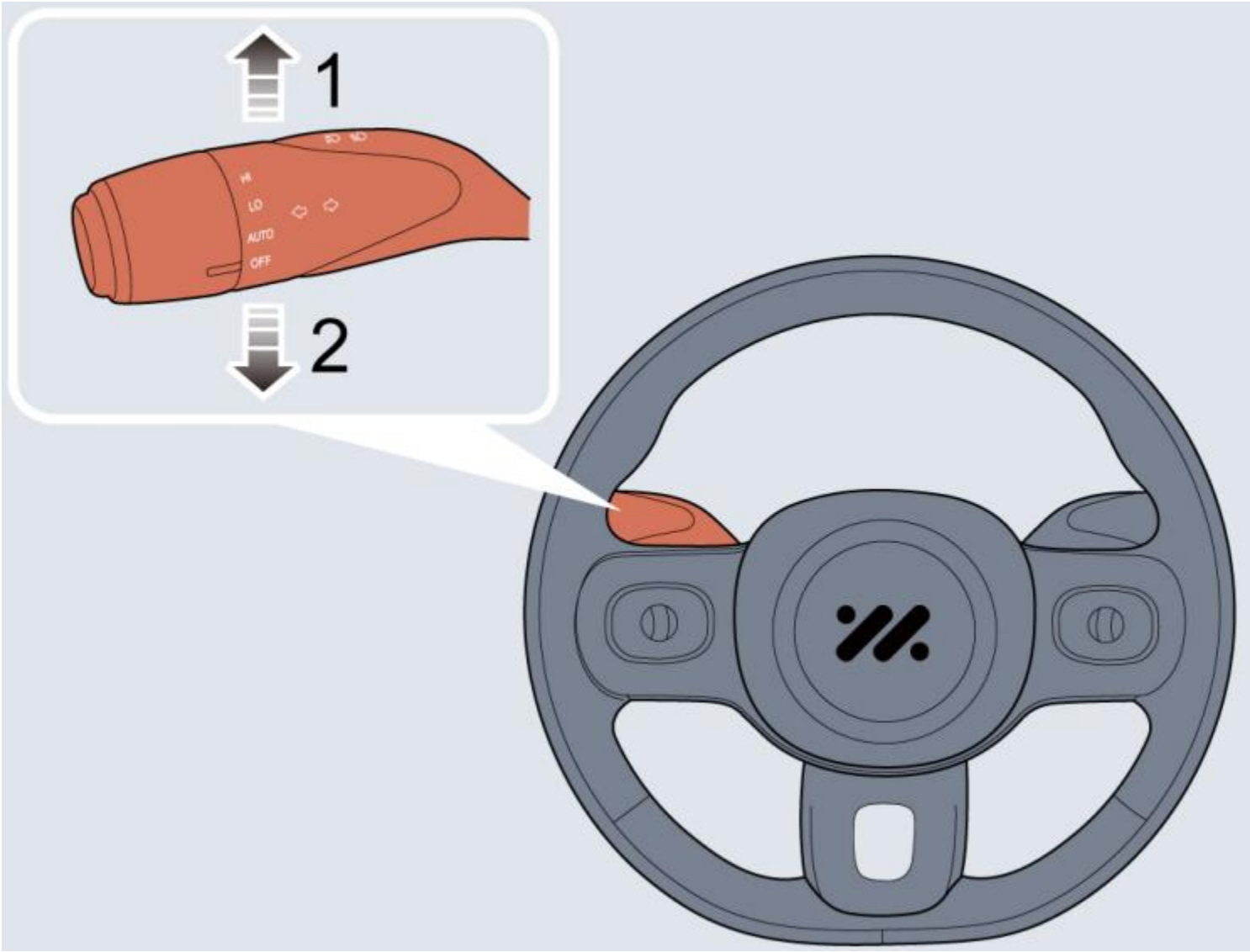

When the vehicle is powered on:

- Move the lever (2) down to operate the left indicator.
- Move the lever (1) up to operate the right indicator.

The corresponding direction indicator lamp in the instrument will flash when the indicator lamps are working.

Rotating the steering wheel will cancel the indicator operation (small movements of the steering wheel may not operate the self cancelling). To indicate a lane change, move the lever briefly and release, the indicators will flash a preset number of times and then cancel.

BSD note: When the user selects a left turn, and the speed is lower than 20 km/h, the road conditions in the front left blind spot vision are displayed on the driver instrument screen; when the speed is higher than 20 km/h, the road conditions in the rear left blind spot vision are displayed on the driver instrument screen. When the user selects a right turn, the road conditions in the rear blind spot vision are displayed on the driver entertainment screen.

Hazard Warning Lamps

The Hazard Warning Lamp button  is located on the overhead console. Short press this button to operate the hazard warning lamp. All the direction indicator and warning lamps will flash together. Press the button again to switch off the hazard warning lamps, the lamps will stop flashing.

Headlamp Leveling

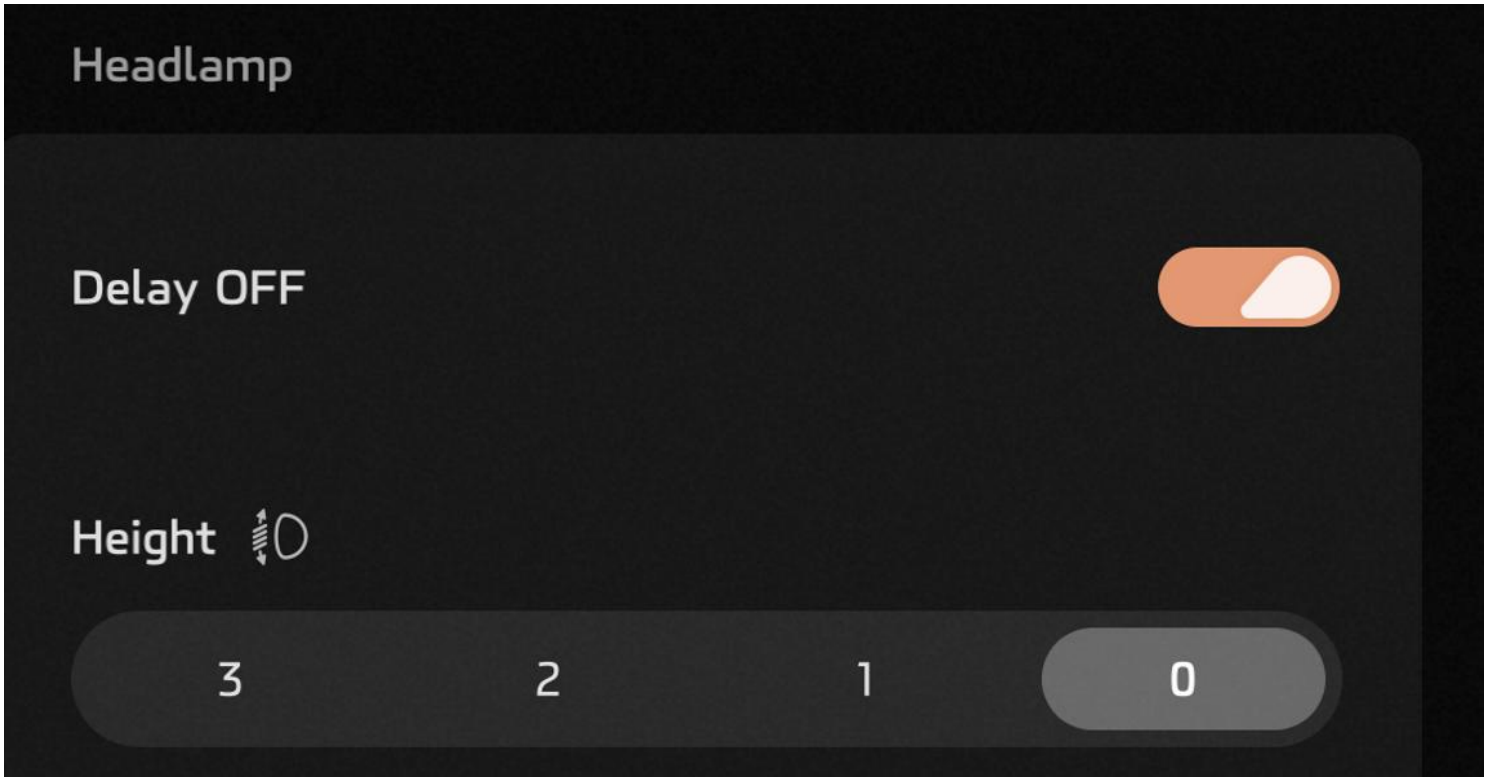

The headlamp levelling can be adjusted as per the following table according to the vehicle load.

Location	Load
0	Driver only, plus an evenly distributed load in the loadspace.
1	All the seats occupied plus an evenly distributed load in the loadspace.
2	All the seats occupied with no load in the loadspace.
3	Driver only, or driver & front passenger.

Headlamp Delay OFF

When the lighting control is in the AUTO position, the low beams and width lights will illuminate for a period of time after the vehicle is locked. The headlamp delay off function can be enabled and disabled through the "Settings" - "Light" path on the central screen.

Interior Lighting

Interior Light Control Interface

Use the central screen operation interface to access the "Light" page, this will allow access to interior light adjustments and operation.

Reading Light

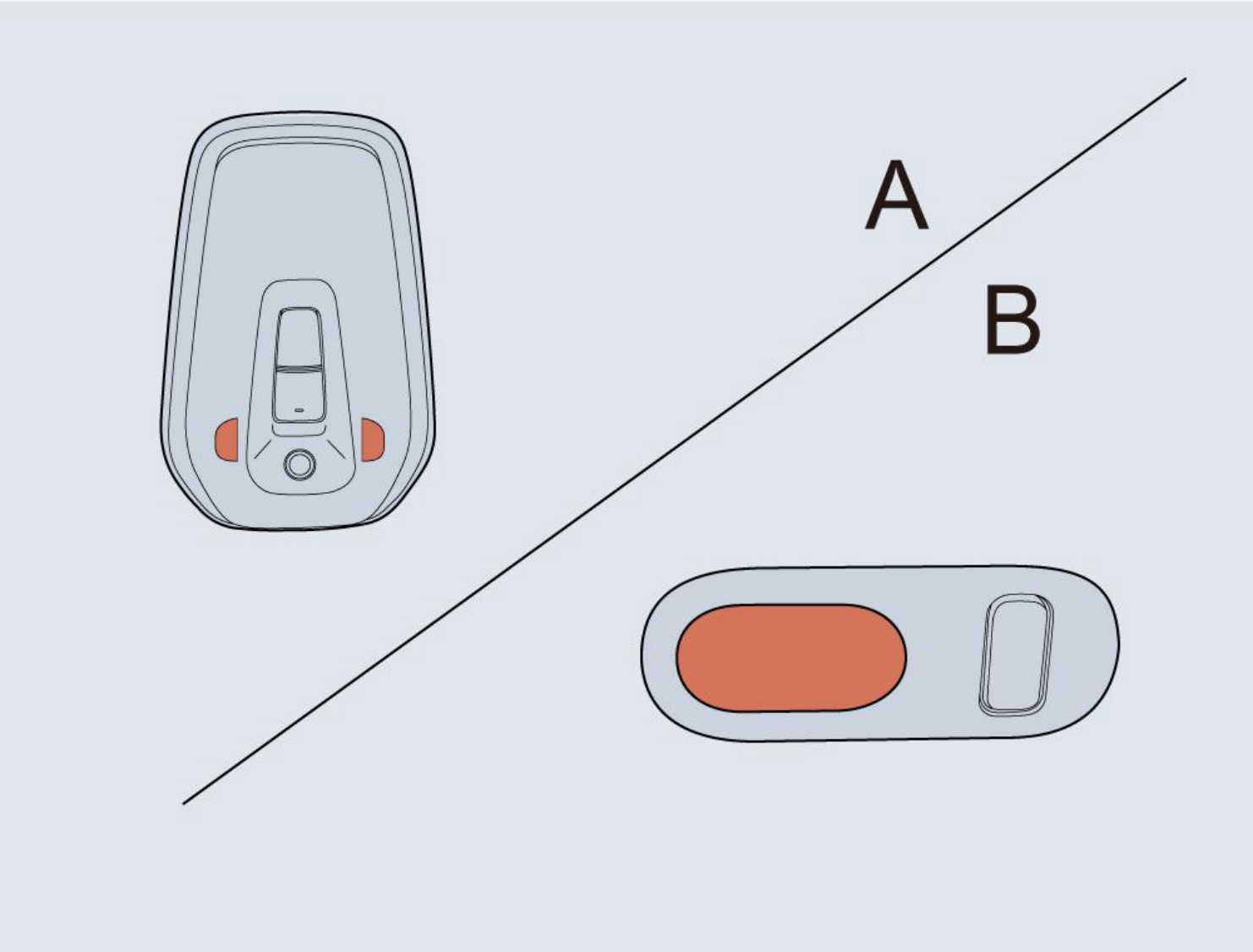

The front reading light (A) is located on the overhead console above the windscreen. Rear reading lights (B) are located on both sides of the roof headlining..

Touch switch control

Briefly touch the touch switch on either side of the front reading light, as shown in figure A, to operate the front reading light on the corresponding side. Briefly touch the touch switch again to switch the front reading light off on the corresponding side.

Briefly touch the touch switch on the rear reading light, as shown in figure B, to operate the corresponding light. Briefly touch the touch switch again to switch the light off.

Central screen control

All on/off

Click the "Full" button of the reading light in the Interior Light Control interface of the central screen, and all the front and rear reading lights will illuminate. Click the button again, and all the front and rear reading lights will extinguish.

Brightness adjustment

The brightness settings of the reading light includes Gentle, standard and Bright. Click the reading light brightness level in the Interior Light Control interface of the central screen to adjust the brightness of the reading light.

Automatic control

Click the "Door Open Illumination" button in the Interior Light Control interface of the central screen to enable or disable the automatic control function. With the function enabled, when any door is opened, the front and rear interior lights will come on automatically.

Note: Under normal circumstances, if the doors are left open beyond a preset time the front and rear reading lights will extinguish automatically.

Note: When the vehicle is locked, the reading lights will extinguish.

Ambient Lighting

Ambient lighting is a type of decorative lighting that is used to create a comfortable atmosphere inside the vehicle.

Colored ambient lights are provided on the upper part of front/rear door interior trim panel. The method of illuminating the ambient light can be set on the central screen.

Turning On/Off

Turn on the master switch of the ambient light on the central screen to operate the ambient light, adjust the color and brightness and select the mode.

Color selection

You can choose the theme color directly according to your personal preference or click the color palette to change the color of the ambient lighting. The last memorized color will be set by default after each restart of the vehicle.

Brightness adjustment

The brightness of ambient lighting can be adjusted by dragging the brightness bar, and will be stored and memorized. The last memorized brightness level will be set by default after each restart of the vehicle.

Intelligent following

After the Intelligent Following button is pressed, the ambient light will enter a mode to work in sympathy with the music rhythm, driving mode switch settings and other functions.

Door open risk warning

With the switch on, when the vehicle stops and the door is open, if a vehicle approaching from behind the door is detected, the ambient light on the door trim panel will turn red and flash as a reminder.

Wash Wipe System

Windscreen Wiper

When the vehicle is powered on, operate the lever to select different wipe modes.

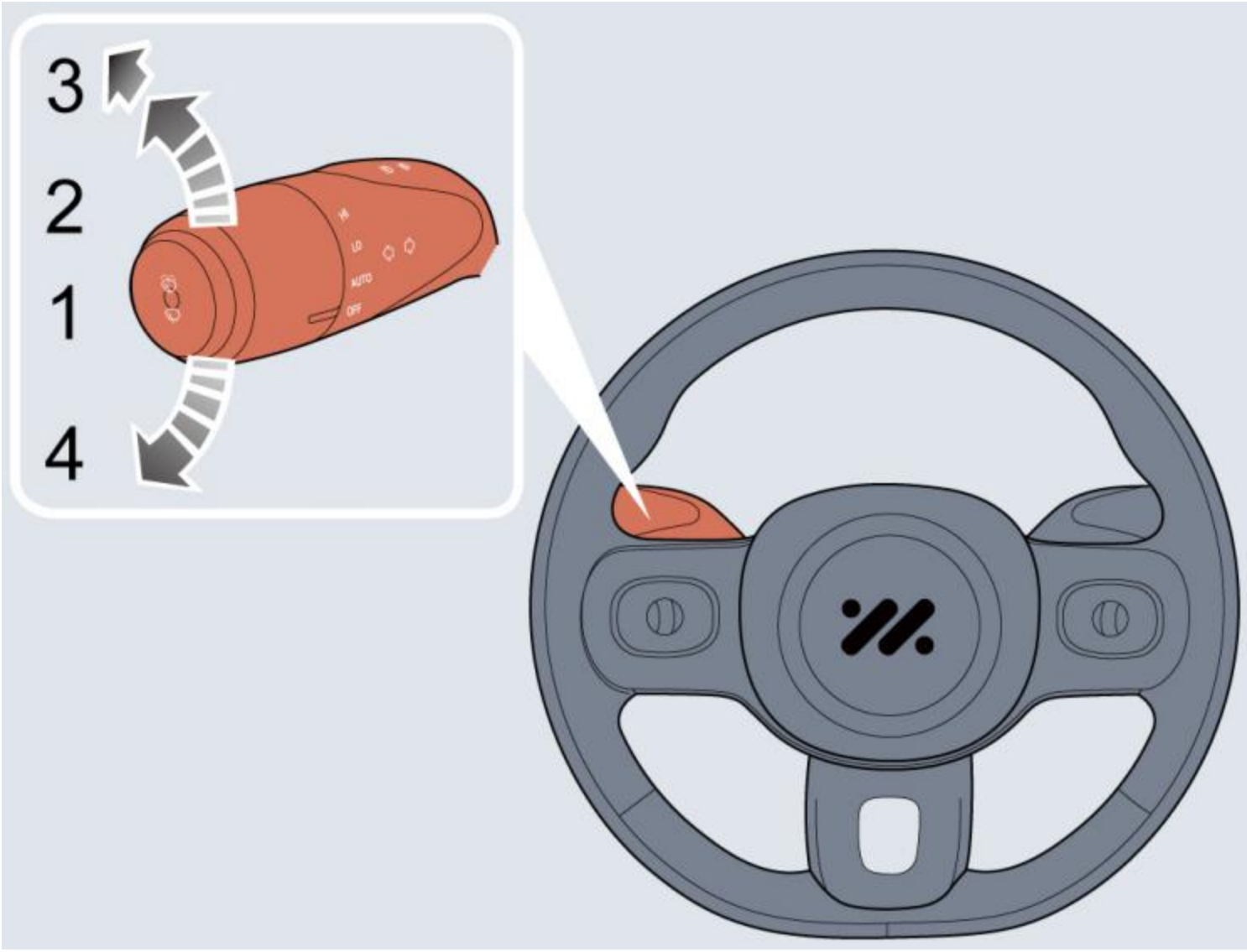

Indication of displayed position

- AUTO: Automatic wipe
- LO: Slow speed wipe
- HI: Fast speed wipe
- OFF: Wipe off (default position)

Automatic wipe

By turning the lever to automatic wipe (1), the wipers will operate automatically. Select the sensitivity adjustment level on the central screen to adjust the wiper delay interval.

A rain sensor is fitted in the interior rearview mirror base to detect varying amounts of water outside of the windscreen. With automatic wipe, the vehicle will adjust the wiping delay interval according to the signals provided by rain sensor.

Note: If the sensitivity level of the rain sensor is increased, the wiper will automatically wipe once; If the rain sensor detects continual rain, the wiper will keep working. In conditions where there is no rain, it is recommended to switch off automatic wipe.

Slow speed wipe

By turning the lever to the slow speed wipe (2), the wipers will operate slowly.

Fast speed wipe

By turning the lever to the fast speed wipe (3), the wipers will operate at a fast speed.

Note: If the wipers are set to fast speed, some intelligent driving functions (ACC/ Pilot) cannot be activated, or some intelligent driving functions may be suspended.

Wipe off

By turning the lever to OFF (4) to turn off the wipe switch, the wipers will stop wiping and return to the park position.

Note: When the vehicle is stationary, if the bonnet is opened, the front wiper will stop working immediately.

IMPORTANT

- Avoid operating the wipers on a dry windscreen.
- In freezing or extremely hot conditions, make sure that the wiper blades are not frozen or adhered to the windscreen.
- If the wiper or windscreen are covered with snow or other debris, please clear the wiper blades and operational area before use.

Windscreen Wipe and Wash

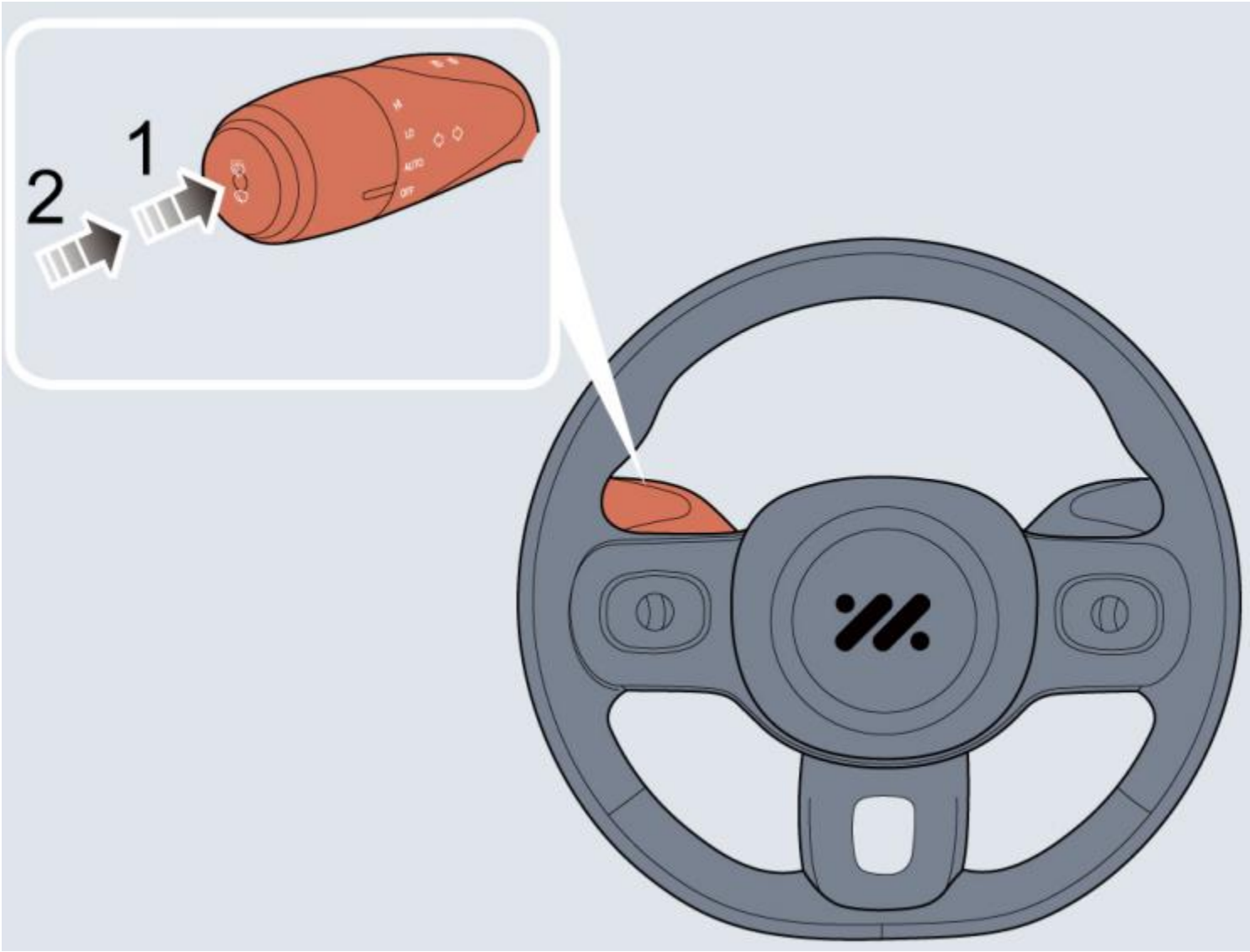

Single wipe (1)

Wipe and wash (2)

Short press the Wipe and Wash button (1), hold for 1 - 2s and release, and the wiper will carry out a single wipe. If the button is held at single wipe (1), the wipers will operate continuously until the button is released.

Long press the Wipe and Wash button (2), the windscreen washer will work immediately. After a short delay, the wipers will commence operating in conjunction with the washers.

IMPORTANT
If the windscreen washer fluid does not spray, immediately release the Wipe and Wash button to avoid the wipers from smearing any dirt or dust on the windscreen to affect the vision.

Steering Wheel

Steering Wheel Adjustment

Warning: It is prohibited to adjust the steering wheel position when the vehicle is in motion to avoid a risk of accident.

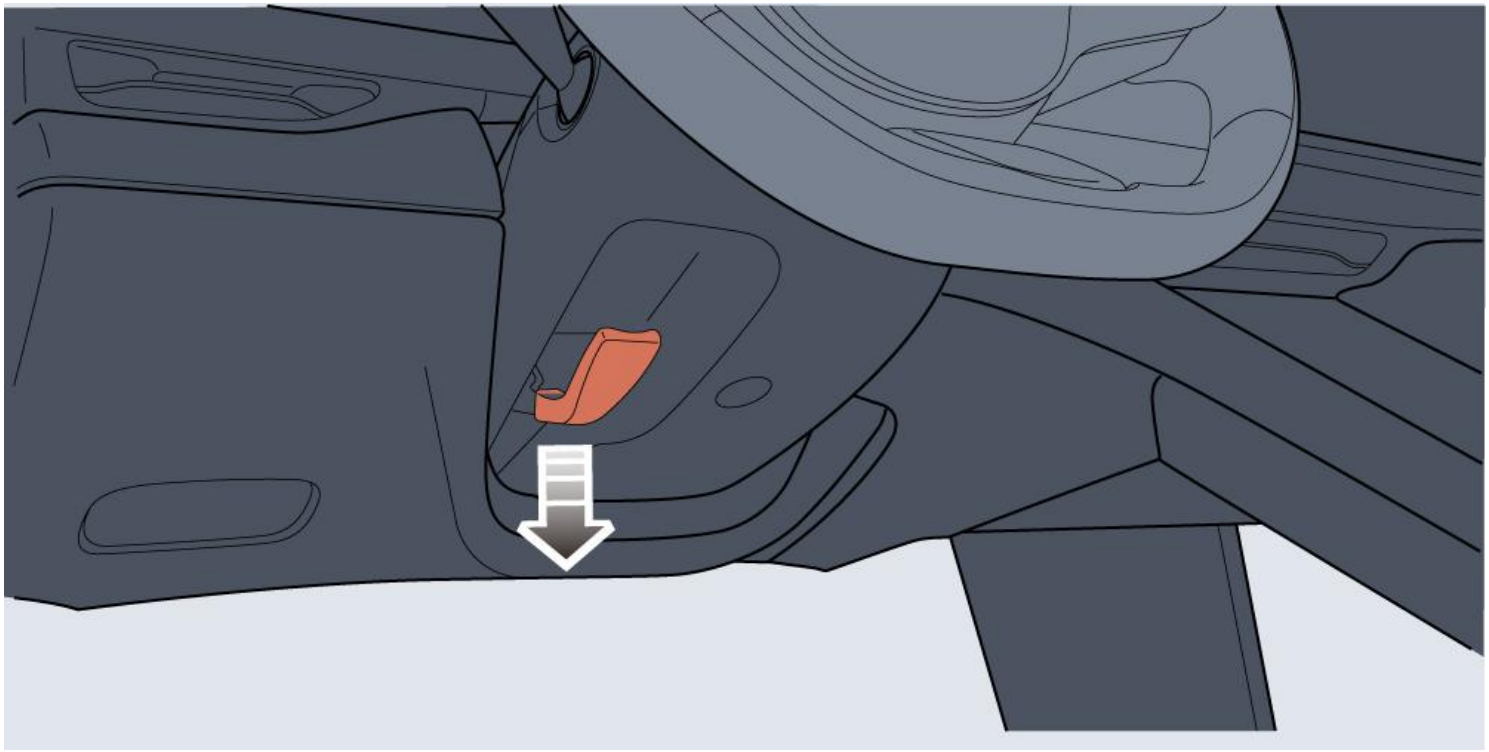

Adjust the position of the steering wheel to suit driving posture:

1. Fully release the locking lever (as arrowed);

2. Hold the steering wheel with both hands and tilt the steering column up or down to adjust the steering wheel height; pull the steering wheel back and forth to adjust the distance between the steering wheel and the driver;

3. Once a comfortable driving position has been selected, pull the locking lever fully up to lock the steering wheel into its new position.

Electric Power Steering (EPS)

This series of models have an electric power steering (EPS) function, which can automatically adjust the power steering magnitude. The EPS system is available only when the vehicle starts.

IMPORTANT
If the EPS fails, the steering may appear very heavy, which can affect driving safety!

Steering feel mode

With the vehicle stationary, when the user selects the 'CUSTOM' option in the 'Vehicle Settings' - 'Driving' mode on the central screen, three settings for personalized steering feel can be selected.

1. Light: provides a high level of assistance and a light feel.

2. Moderate: provide a moderate level of assistance with a moderate feel.

3. Steady: provides a low level of assistance with a heavier feel.

IMPORTANT
When the EPS is working, holding the steering wheel on full lock for long periods will result in a reduction in steering power, causing a heavier feel to the steering!

If the 12 volt battery has been disconnected for any reason, upon reconnection the warning lamp will illuminate yellow. This shows that the steering requires calibration. With the steering wheel set to the central straight ahead position, rotate the wheel to full left lock, return the steering to the central straight ahead position, then rotate the wheel to full right lock and back to centre. The lamp will now extinguish and the steering will be restored.

Rear Wheel Power Steering System

The rear wheel power steering system operates via a motor. When the vehicle is started, the steering power is automatically adjusted according to the vehicle speed and steering wheel angle to provide various different steering angles.

Compared with vehicles without rear wheel power steering function, when the vehicle with this function runs at low speed, the rear wheels steer in the reverse direction relative to the front wheel, which improves the ability to make a turn or turn around at low speed; when the vehicle runs at high speed, the rear heels steer in the same direction as the front wheels, which improves the vehicle stability during lane change.

IMPORTANT
DO NOT add excessive loads to the loadspace. Excessive rear axle load will lead to sluggish response of rear wheel power steering, which would make it prone to excessive motor noise!

Steering Wheel Heating

The "Steering Wheel Heating" function can improve the driving comfort at low ambient temperature. This function can be enabled or disabled by clicking the Steering Wheel Heating button in the Seat Adjustment interface of the central screen.

Horn



Press the horn button area on the steering wheel to sound the horn.

IMPORTANT
The horn switch area on the steering wheel is also the cover plate of the driver's front airbag module. Therefore, to avoid possible SRS issues, please do not press with excessive force or hit the airbag cover when operating the horn.

Suspension

Suspension System*

Electronically Controlled Suspension*

Some models in this series are equipped with electronically controlled suspension. Compared with the traditional suspension system, the electronically controlled suspension system has the advantages of improving the driving comfort and stability of the vehicle, reducing the load change of the tyres, shortening the braking distance, mitigating the vibration in the vertical direction of the body, etc., all this balances the stability and comfort of the vehicle.

Models fitted with the electronically controlled suspension system feature three suspension damping adjustment modes. When the vehicle is stationary, the user can customize the suspension stiffness in the Driving Settings on the central screen as required.

1. Soft: The dampers provide a small damping force for adjustment.

2. Moderate: The dampers provide a moderate damping force for adjustment.

3. Hard: The dampers provide a large damping force for adjustment.

Air Spring*

Some models in this series are equipped with air sprung suspension. Compared with traditional steel springs, air springs can change the height of the vehicle as required, improving ride comfort and the driving trafficability.

The air sprung suspension system features a rough terrain mode and adjustable vehicle suspension heights: high, medium, low. When the vehicle is stationary, the user can customize the suspension height settings in the Personalized Driving Mode on the central screen as required.

Note: The driving speed affects vehicle height. When a certain driving speed is reached, the vehicle height will be lowered automatically to ensure driving safety.

Note: The air sprung suspension system will self-test and top up the gas within the system, this will create a sound when the air compressor works to replenish the system, which is normal.

Suspension Service Mode*

In the General interface of central screen, there is a "Suspension Service Mode".

It is necessary to press the button to activate "Suspension Service Mode" before the vehicle is subject to lifting for maintenance, traction for shipment, tyre replacement, etc. Press the button again to deactivate "Suspension Service Mode" after maintenance, traction for shipment, etc.

Rearview Mirror

Exterior Rearview Mirror Adjustments

The exterior rearview mirrors can be folded so as to avoid collision or allow the vehicle to pass through a narrow passage.

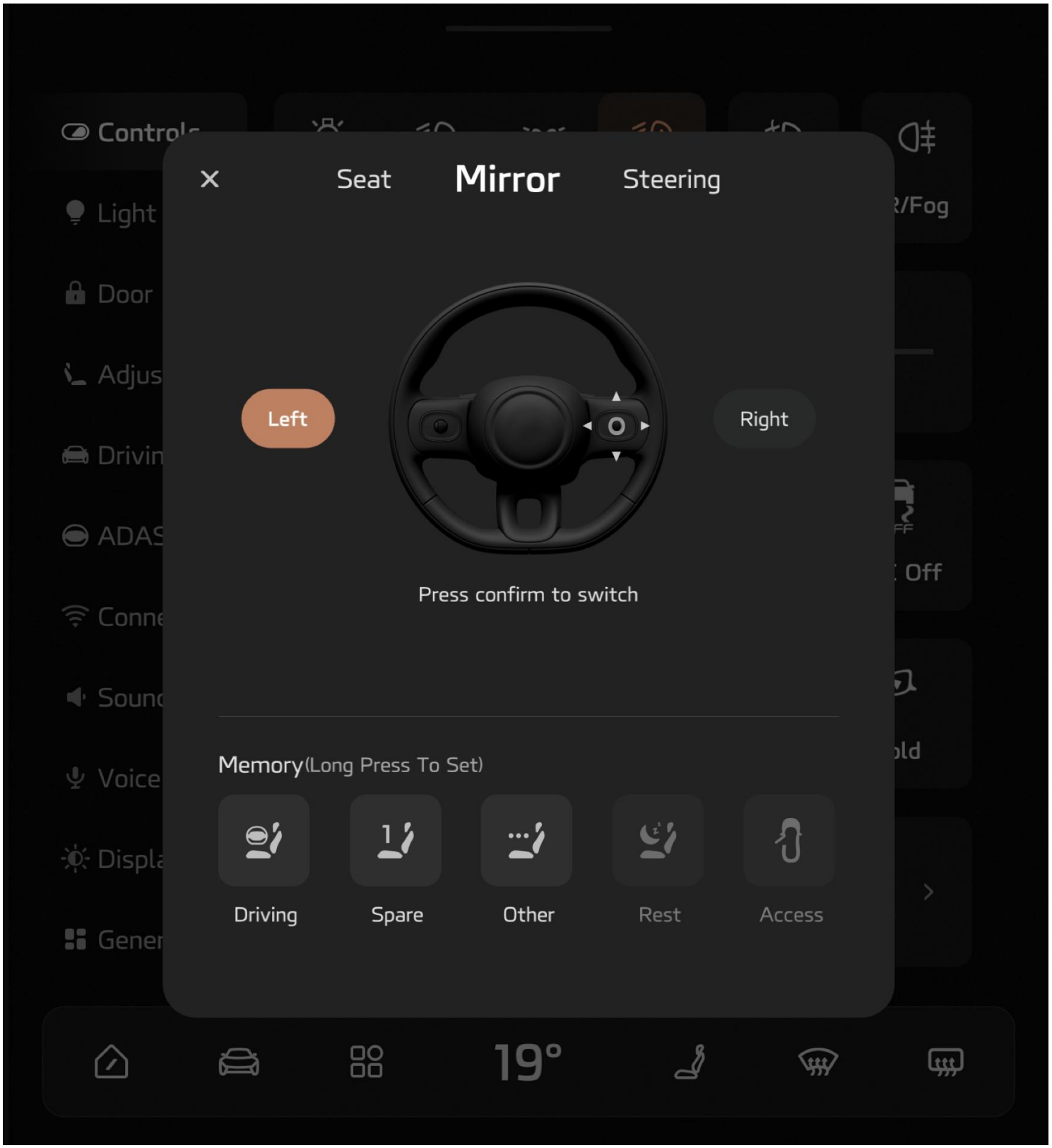

- Select the exterior rearview mirror adjustment function from the "Settings" - "Controls" path on the central screen.
- You can switch between the left and right exterior rearview mirrors via the Exterior Rearview Mirror Adjustment interface on the central screen or by pressing the O button on the right of the steering wheel.
- Moving the O button on the right hand steering wheel control Up, Down, Left and Right will adjust the angle of the exterior rearview mirror.
- Some models feature exterior rearview mirror position memory (Driving, Spare, and Other). Long press the soft switch to update the memory position, short press the soft switch to set the mirror to the memory position.

Note: Vehicles or objects viewed in exterior rearview mirrors may appear further away than they actually are.

IMPORTANT

- The adjustment and folding of the exterior rearview mirrors is operated by an electric switch, and operating them directly by hand may damage related devices.
- Spraying high pressure water jets directly onto, or into electrical devices may result in electric device failure.

Exterior Rearview Mirror Folding

The exterior rearview mirrors can be folded so as to avoid collision or allow the vehicle to pass through a narrow passage.

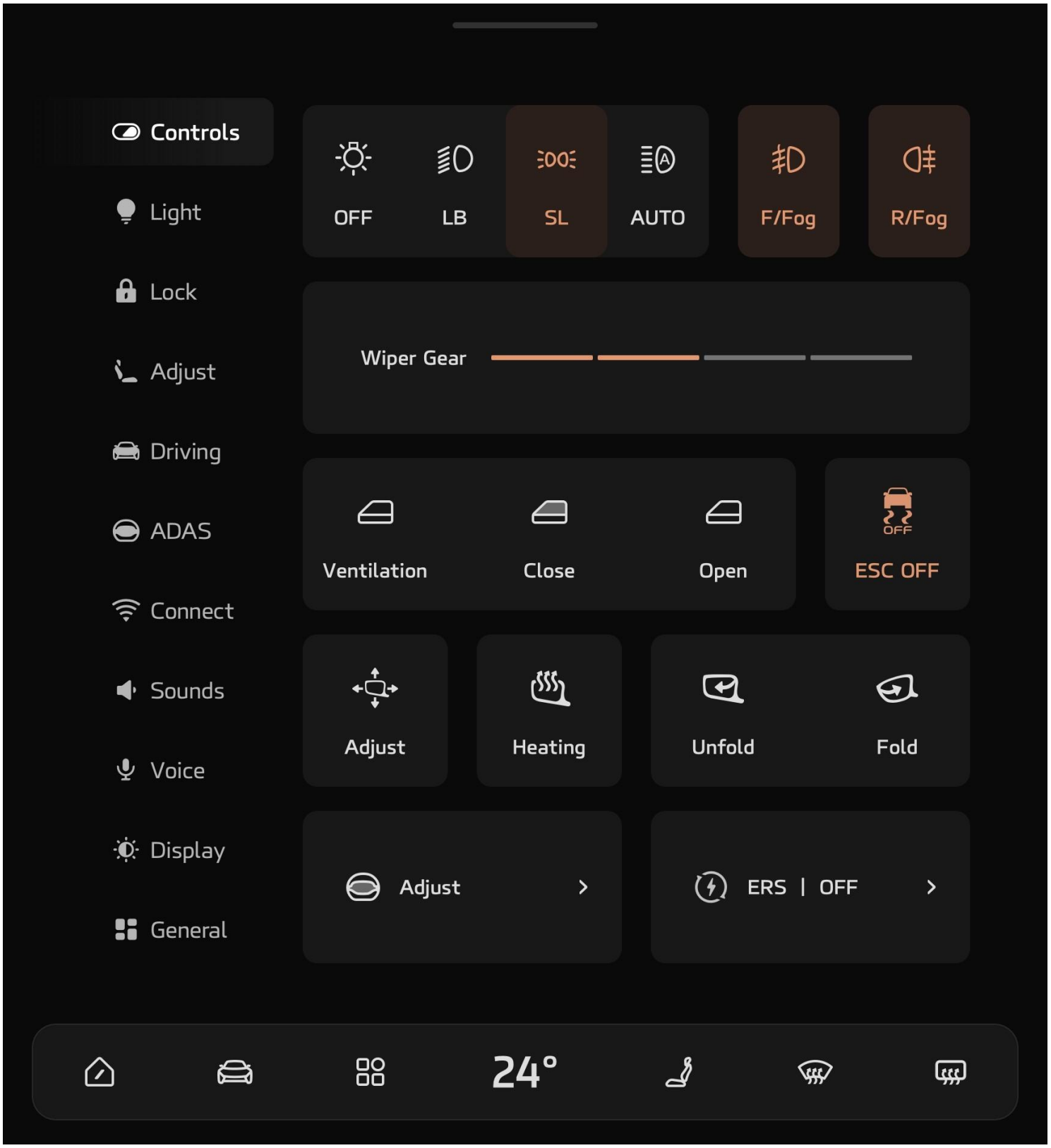

Folding or unfolding of the exterior rearview mirrors can be carried out via the "Settings" - "Controls" path on the central screen. Press the "Unfold" button, and the exterior rearview mirror will electrically unfold; press the "Fold" button, and the mirror body will return to the folded position.

When unlocking/locking the vehicle, the exterior rearview mirrors will be unfolded/folded automatically.

With the vehicle in motion, when the speed exceeds 10 km/h, the rearview mirrors will automatically unfold, this will only be triggered once in a start cycle; when the speed exceeds 20km/h, the rearview mirrors cannot be electrically folded.

Note: If the exterior rearview mirror deviates from its original position due to human intervention or other factors, it can be restored to the original position by pressing the folding switch and running through the fold/unfold sequence.

Exterior Rearview Mirror Heating

The exterior rearview mirrors have integral heating elements which can disperse frost or mist from the glass.

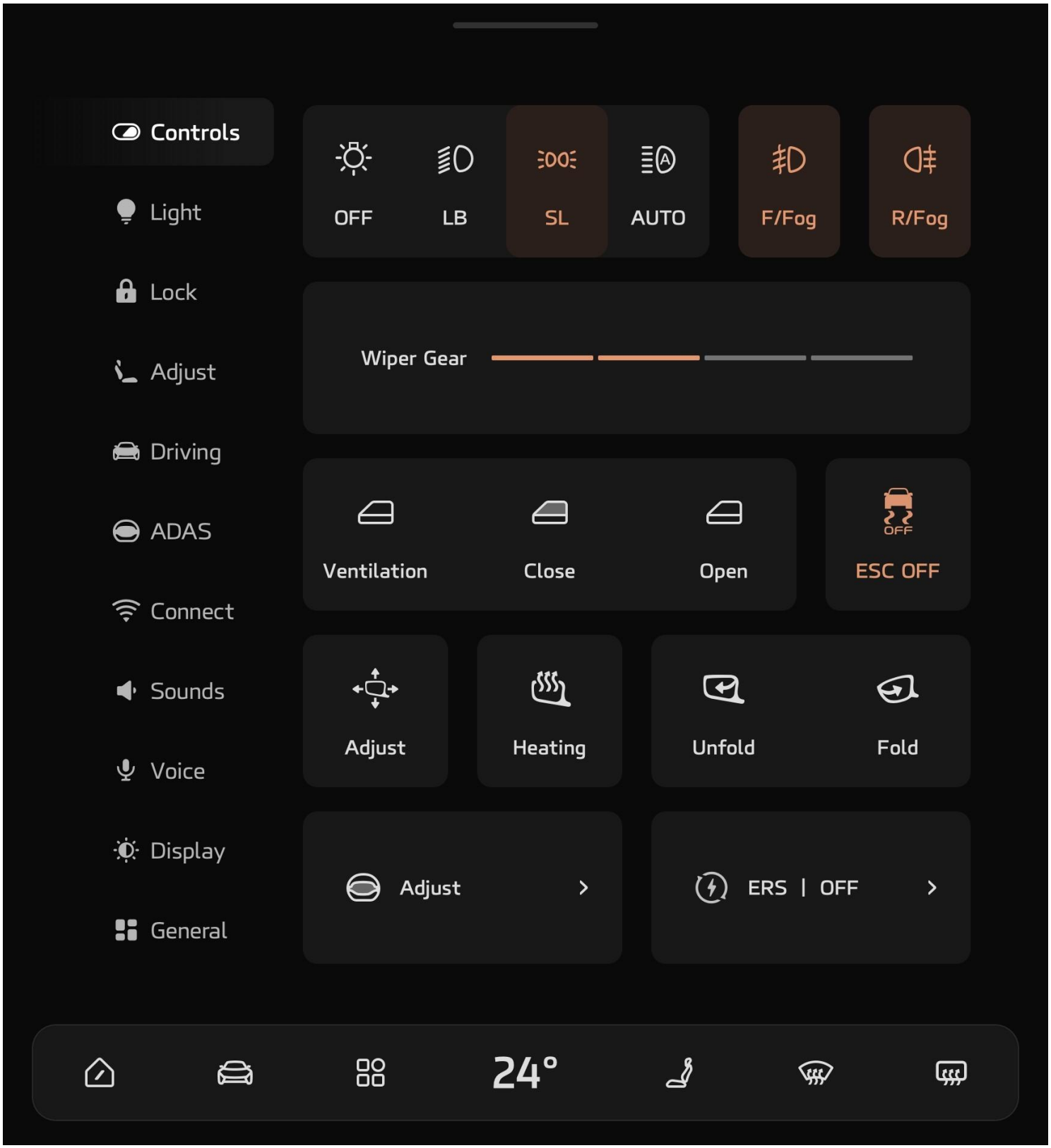

Access and press the "Mirror Heat" button through the "Settings" - "Controls" path on the central screen to enable or disable the exterior rearview mirror heating function.

Exterior Rearview Mirror Tilt During Reverse

To enable the driver to view the rear wheels and the road surface behind the vehicle during reversing, some models feature the exterior rearview mirror tilt memory function during reversing. This function can be enabled or disabled on the central screen.

- When reversing is required, the mirror downward inclination angle can be set as follows.
- Start the power system and engage in R gear;
- Adjust the exterior rearview mirror glass on both sides to tilt the glass to an appropriate angle;
- Remove from reverse and select another gear;

Note: During reversing, if the set mirror tilt angle is changed again, then the new angle will be automatically memorized after the vehicle is switched from R gear to another gear, and this angle will be used during the next reversing action.

Foldable Interior Rearview Mirror

Warning: Do not fold the interior rearview mirror whilst driving, the distraction may lead to an accident.

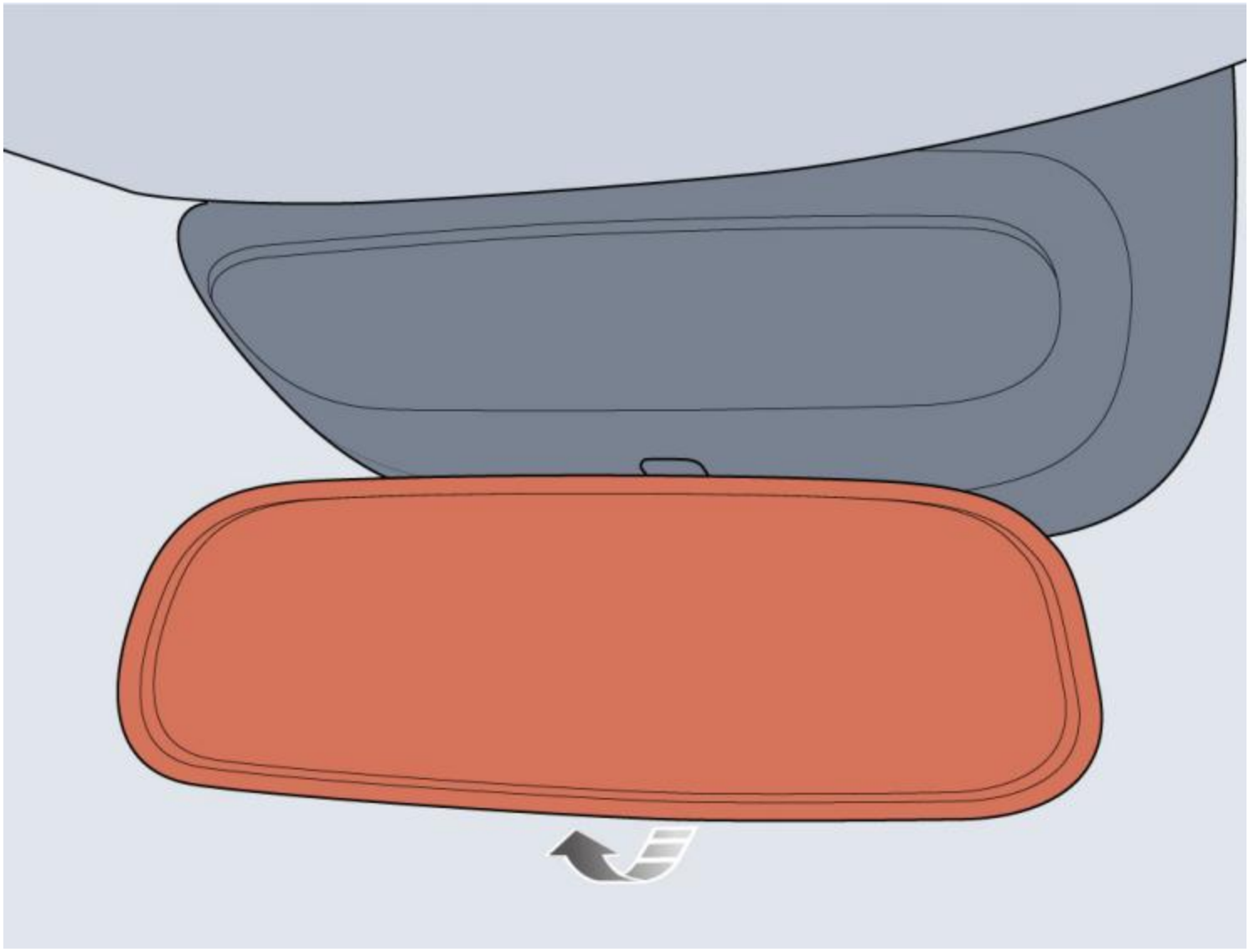

The interior rearview mirror can be folded upward to provide wider field of vision.

Note: The interior rearview mirror should be folded only when it is confirmed there is no vehicle behind.

Window

Power Operated Window Switch

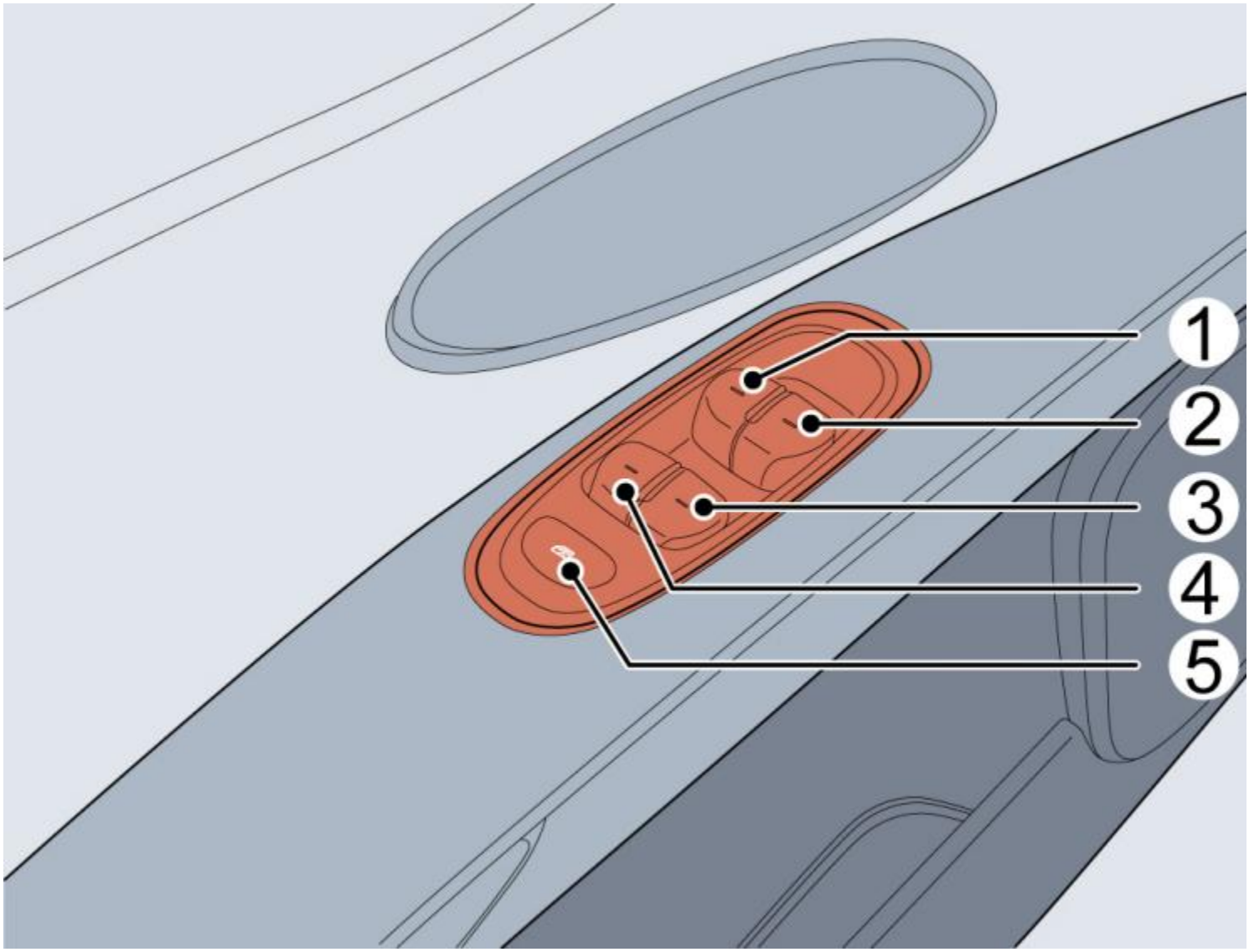

1. Front Left Window Switch
2. Front Right Window Switch
3. Rear Right Window Switch
4. Rear Left Window Switch
5. Rear Window Isolation Switch

Window Operation

The electric windows can be operated when the vehicle is powered on (Doors should be closed during operation).

Press the switch (1-4) to lower the window, and pull up the switch to raise the window. Release the switch, the window will stop moving (unless in "one-touch" mode).

"One-touch" Down

The window control switches (1-4) for all doors are equipped with two positions; short press to the 2nd position, and the window will automatically fully open. When the window is moving down, its movement can be stopped at any time by operating the switch again.

"One-touch" Up and Anti-pinch

All window switches have the "One-touch" Up and "Anti-pinch" function. When short pressing the window control switch, the window will automatically ascend to close. Window movement can be stopped at any time by briefly operating the switch again during ascent.

The "Anti-pinch" function is a safety feature which prevents the window from ascending and descends a preset distance automatically if an obstruction is sensed.

Note: The front and rear windows can also be operated by individual window switches mounted on each door. The rear window switches will not function if the rear window isolation switch on the driver door has been activated.

Rear Window Isolation Switch

Press the switch (5) to isolate the rear window controls (an indicator lamp in the switch illuminates), and press it again to restore control.

Note: It is recommended that you ISOLATE the rear window switches when carrying children.

Note: Please operate the windows correctly to avoid danger, the driver must instruct the occupants on the use of windows and safety precautions.

Note: If the battery power is interrupted, or the motor fails during the window lifting/lowering process, the "One-touch" Up and "Anti-pinch" modes will be suspended. After the vehicle power is restored, fully close the window with the window switch when the door is closed and then fully open the window after continually pressing the switch for about 5 seconds. The "One0touch" Up and "Anti-Pinch" functions will be restored by pressing and holding the switch for about 5 seconds.

The vehicle features an Automatic Window Closing during Vehicle Locking function, to ensure the safety of passengers and reduce any risk of occupants overheating, please ensure all passengers, especially children have exited the vehicle before activating this function.

Sunroof and Sun Visor

Sunroof

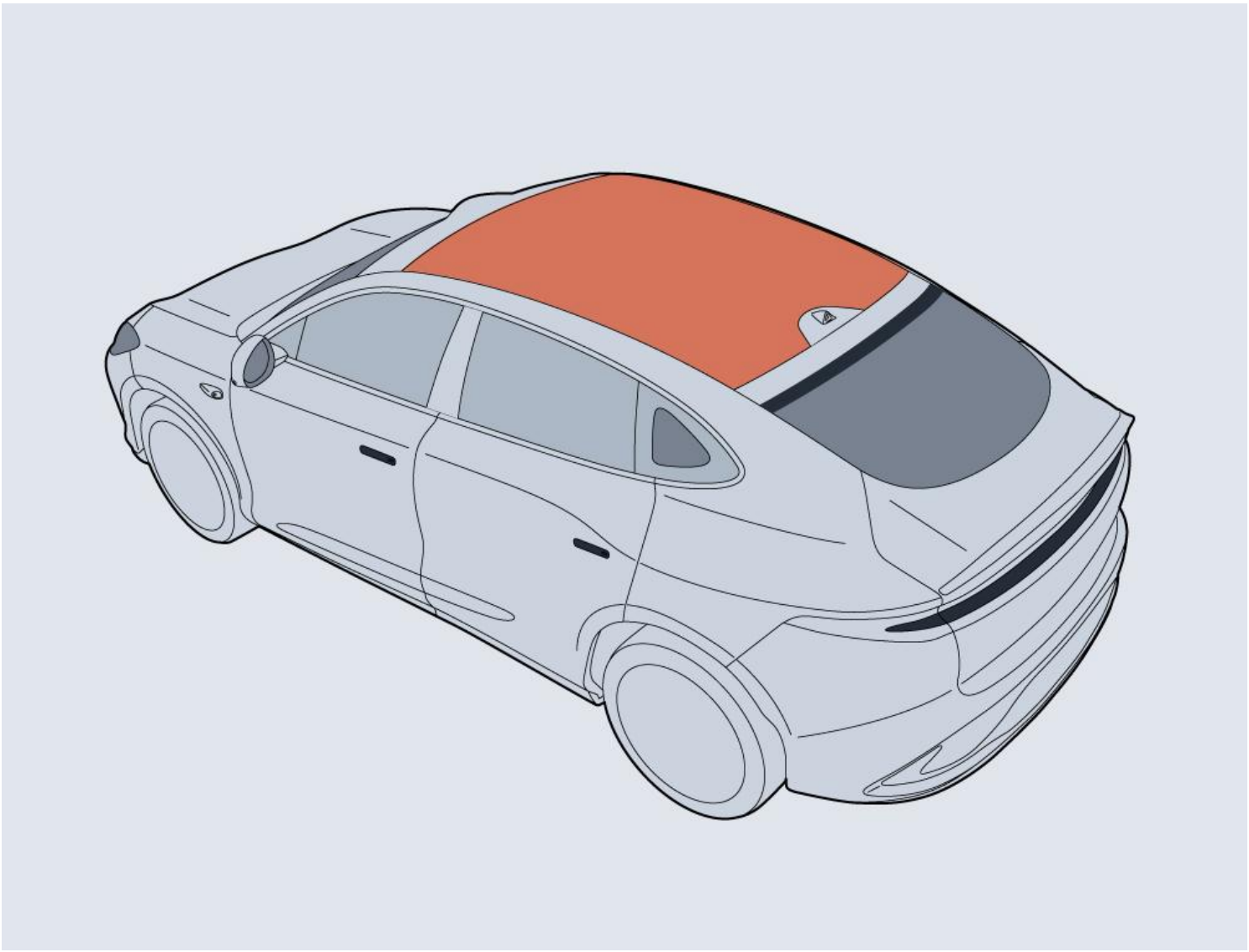

This vehicle is equipped with a fixed glass sunroof,, this allows excellent daylight penetration providing a bright interior whilst reducing the effects of direct sunlight.

Sunvisor

Warning: The vanity mirror on the driver side should only be used when the vehicle is stationary.

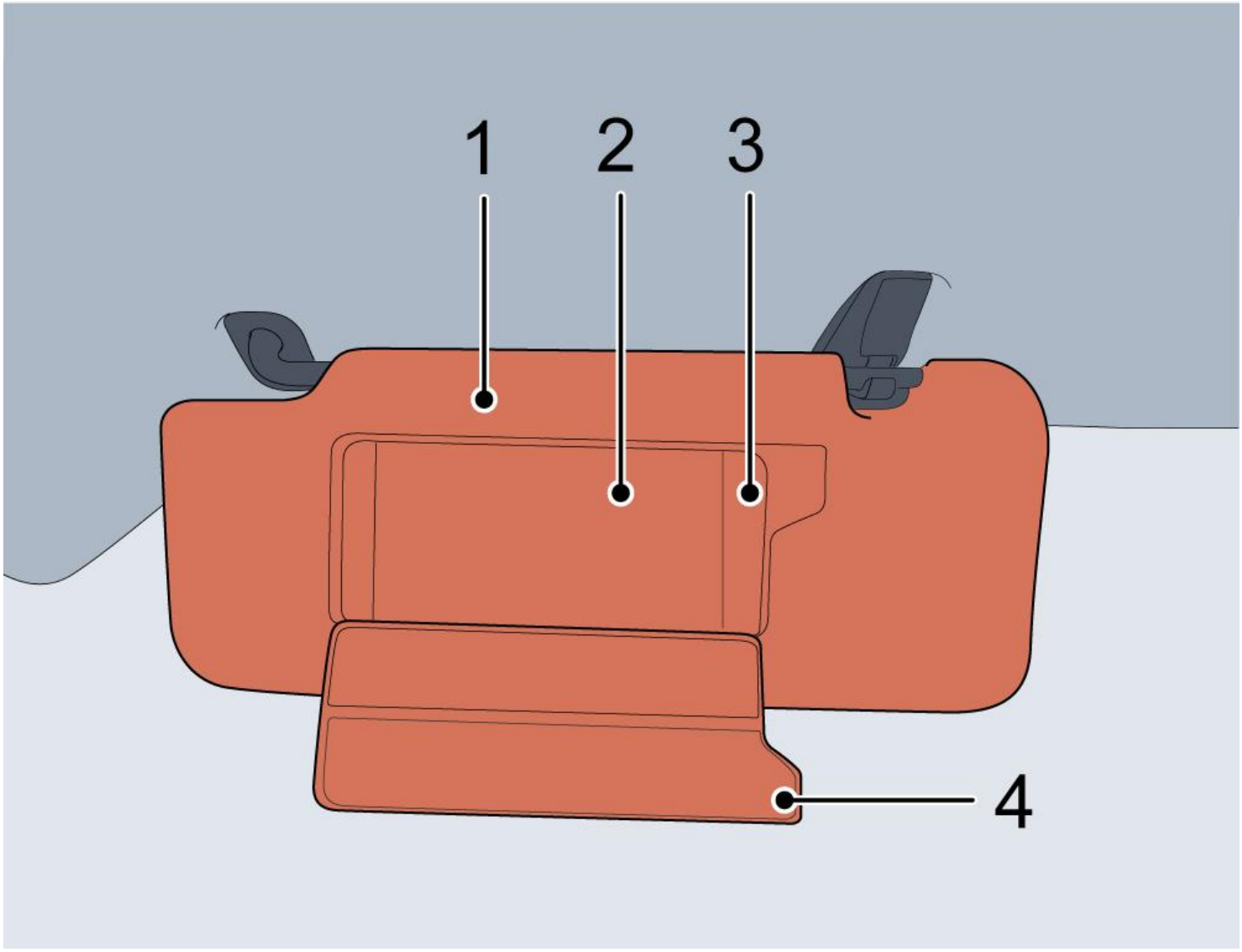

1. Sunvisor

2. Vanity Mirror

3. Vanity Mirror Light

4. Vanity Mirror Trim Panel

Sunvisor (1), vanity mirror (2) and vanity mirror light (3) are arranged on the roof ahead of both the driver and the passenger.

Lower the sunvisor and open the vanity mirror trim panel (4), so that the vanity mirror can be used. The vanity mirror light will illuminate when the trim panel is opened, and it will extinguishwhen the trim panel is closed.

Power Socket

Front Power

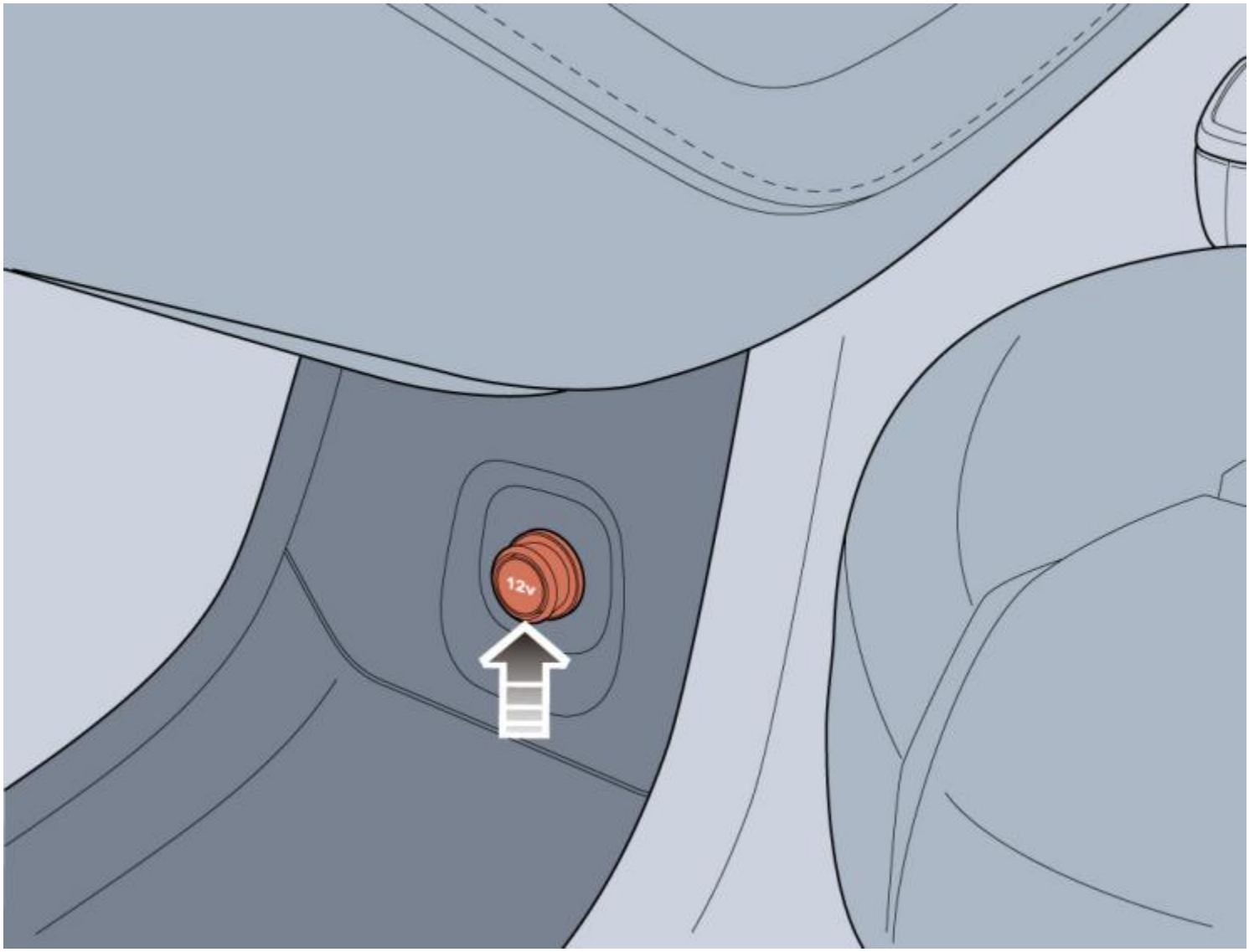

- The 12V front power socket is located below the front of centre console, and can be used as a power supply when the vehicle is powered on.

Warning: Please ensure that the blanking plug is inserted when the 12V power socket is not in use, otherwise foreign objects may enter the socket to affect its use or even cause a short circuit.

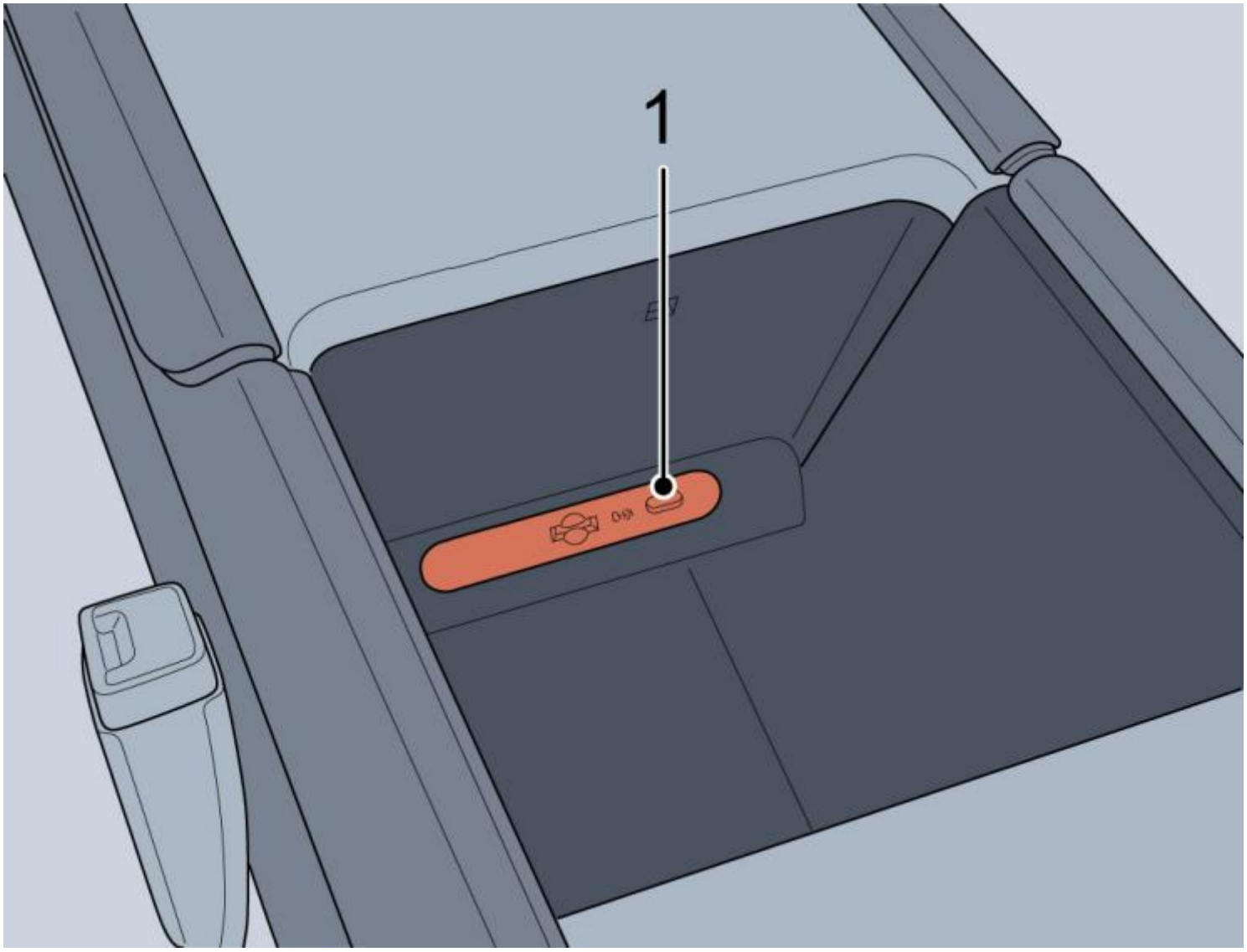

- One Type C port is installed inside the centre console armrest box as a power supply or data transmission interface.

Note: The voltage of the front console power socket is 12V, the maximum power is 120W; the maximum power of the front Type C port is 60W, and its output current is 3A. Please do not use an electrical appliance with its power consumption exceeding the rating.

Note: It is not recommended/prohibited to use the front console power socket or Type C port when the vehicle is not powered on. When the vehicle is not powered on, the use of front console power socket or Type C port will consume battery power; long-time use may cause battery drain, and the vehicle will not enter READY mode.

Note: The Type C port of this vehicle may not support certain fast charging devices.

Rear Console Power

The vehicle is equipped with one Type C port at the rear of the centre console.

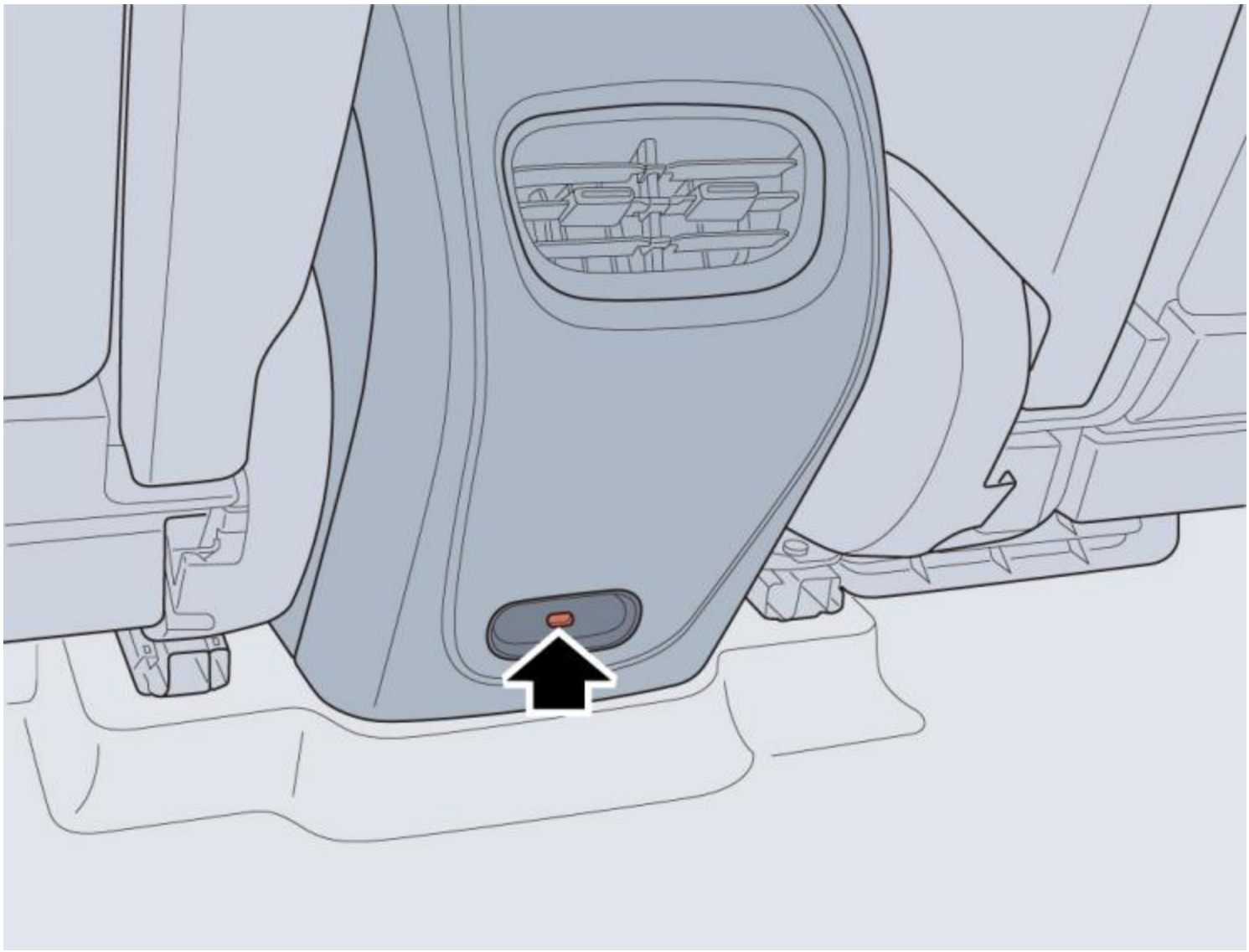

Note: The power of the rear Type C port is 15W, and its output current is 3A. Please do not use an electrical appliance with power consumption that exceeds the supply.

Note: It is advised not to use the rear Type C port when the vehicle is not powered on. When the vehicle is not powered on, the use of the rear Type C port will consume battery power; long-time use may cause battery drain, and the power system cannot be started.

Note: The Type C port on this model may not support certain fast charging devices.

Loadspace Power Supply

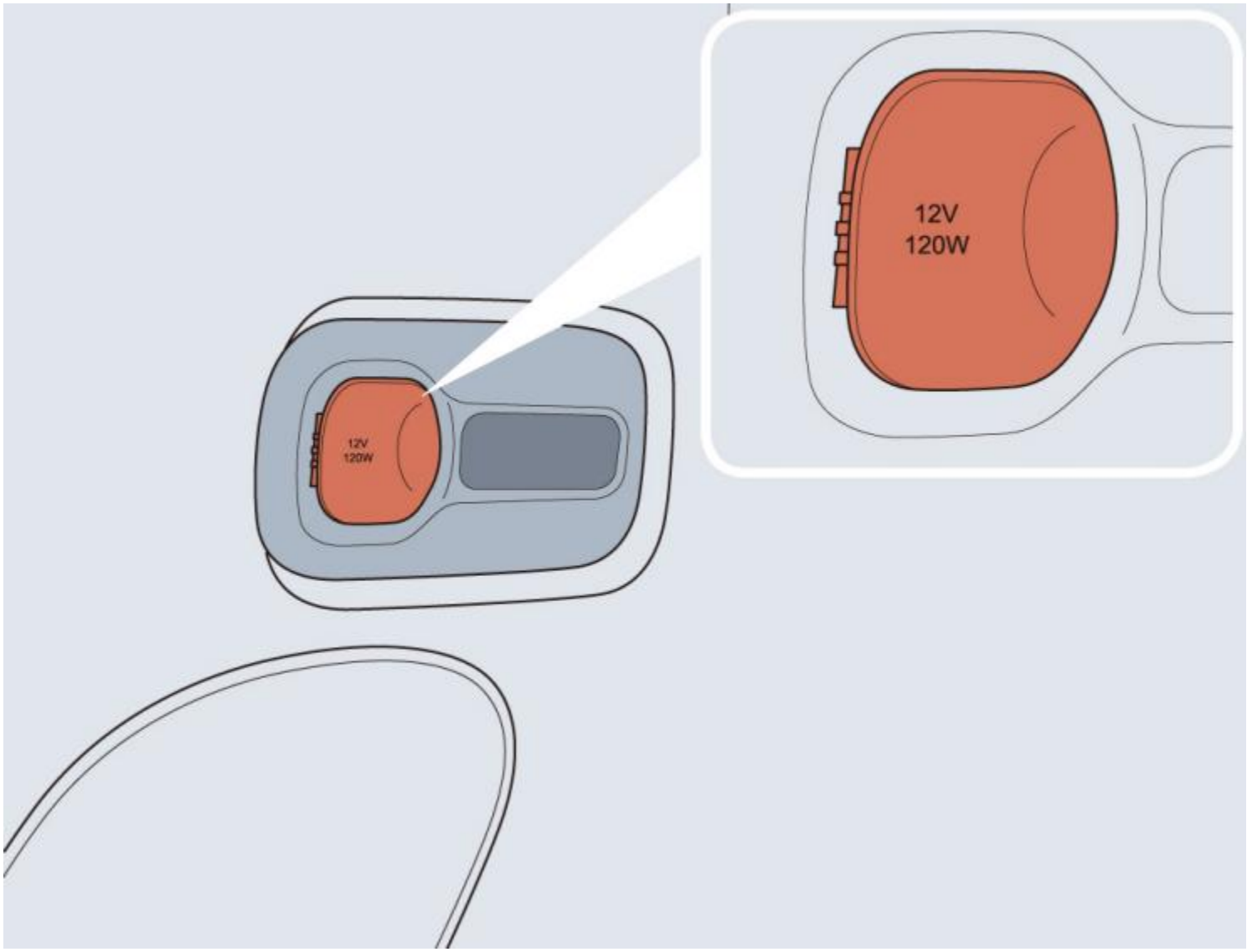

The loadspace power socket is located on the left of the loadspace. The maximum operating voltage is 12V, and the maximum power is 120W. When the vehicle is powered on, open the cover of the power supply to use it as a power supply.

Wireless Charging of Mobile Phones



The wireless charging function supports the charging of certain mobile phones without the use of cables using electromagnetic induction.

Note: The wireless charging function only applies to WPC QI certified mobile phones.

The mobile phone wireless charging area is located at the centre console, and the wireless charging function can be used when the vehicle is powered on.

Note: Only one mobile phone can be charged at a time.

Note: In order to achieve the optimum charging effect, place the mobile phone on the wireless charging panel completely, and align the centre of the mobile phone with the centre of the wireless charger (position of the charging area character).

Note: When the driver is not in the vehicle, do not charge the mobile phone in the vehicle to avoid potential safety hazards.

Note: Wireless charging of a mobile phone may be intermittent when driving on bumpy roads. If the mobile phone deviates from the charging area and stops charging, you may need to move it back to the chargeable area.

Note: The sizes of different brands of mobile phones are different, and the positions of charging coils in the mobile phones are different. Please adjust the position of mobile phone appropriately. In addition, the shell of some mobile phones may affect wireless charging.

If the mobile phone cannot be charged properly, please make sure that there is no foreign matter in the wireless charging area or wait for the wireless charging area to cool down before further attempts. If it still cannot be charged, please contact an Authorised Repairer.

Note: When the wireless charging system is being used, make sure that the smart key and/or NFC card is 20cm or more away from the wireless charging area. Do not place coins, IC cards, metal keys or other items comprising of a large amount of metal in the wireless charging area with your phone. This may result in the failure of wireless charging function and create a safety hazard.

Load Carrying

Instructions for Loading the Vehicle

- Please close all storage devices when the vehicle is in motion. Leaving these storage devices open may cause personal injuries in cases of a sudden start-off, emergency braking or an accident.
- Do not place flammable materials such as liquid or lighters in any storage devices. The heat in hot summer may ignite flammable materials and lead to a fire.

Warning: DO NOT carry unsecured equipment, tools or luggage that could move, these may cause personal injury in the event of emergency braking, steering or traffic accidents.

Warning: DO NOT obstruct the driver and passengers seating position or vision with loads.

Warning: Do not place hot drinks in the cup holder whilst driving. Spillage may result in scalding or other unnecessary injuries.

IMPORTANT
It is only recommended that a closable cup or drink bottle be placed in the cup holder; otherwise, drinks may spill out and potentially damage the vehicle's equipment.

Centre Console Front Storage Box

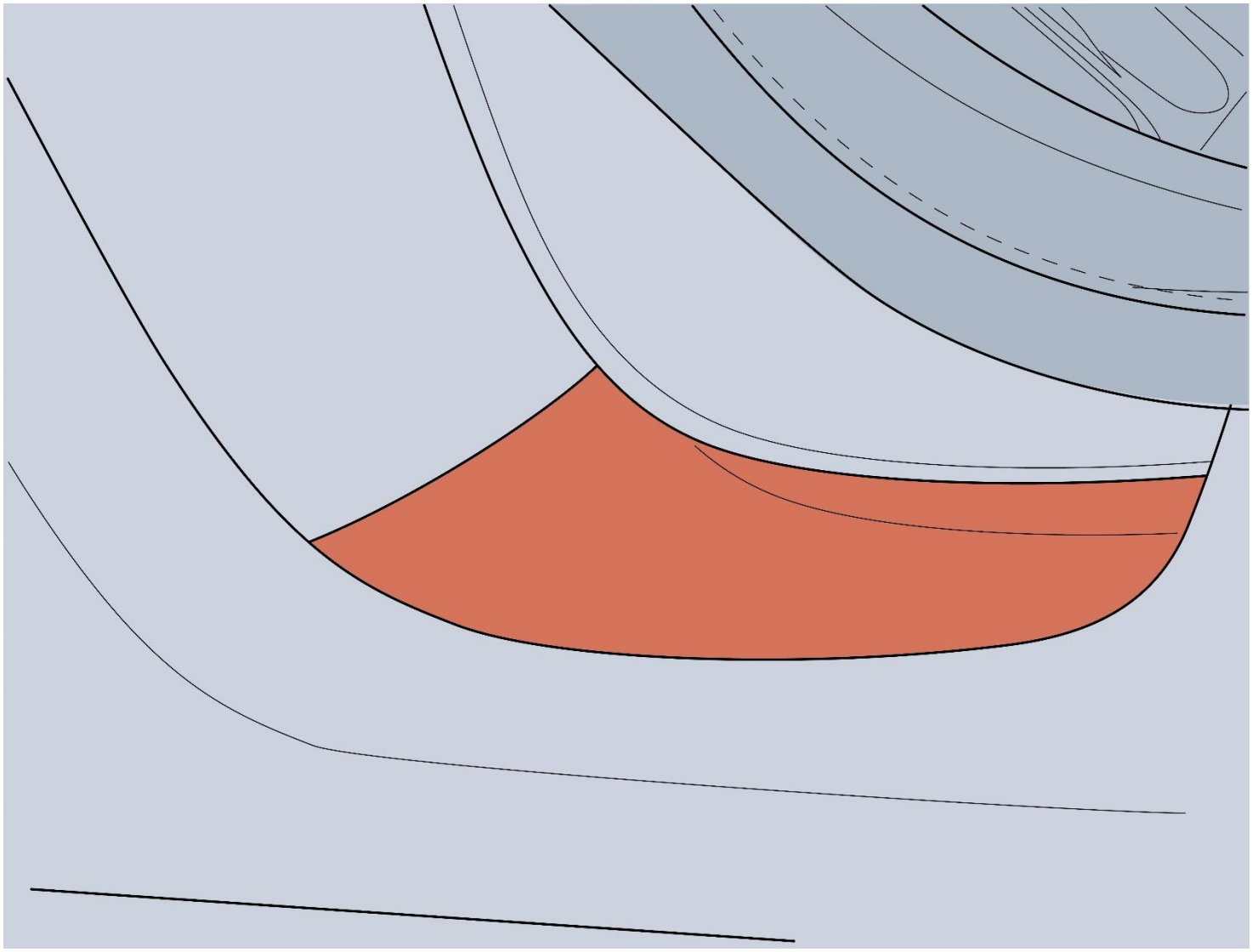

The centre console front storage box is located below the central screen.

Centre Console Armrest Box

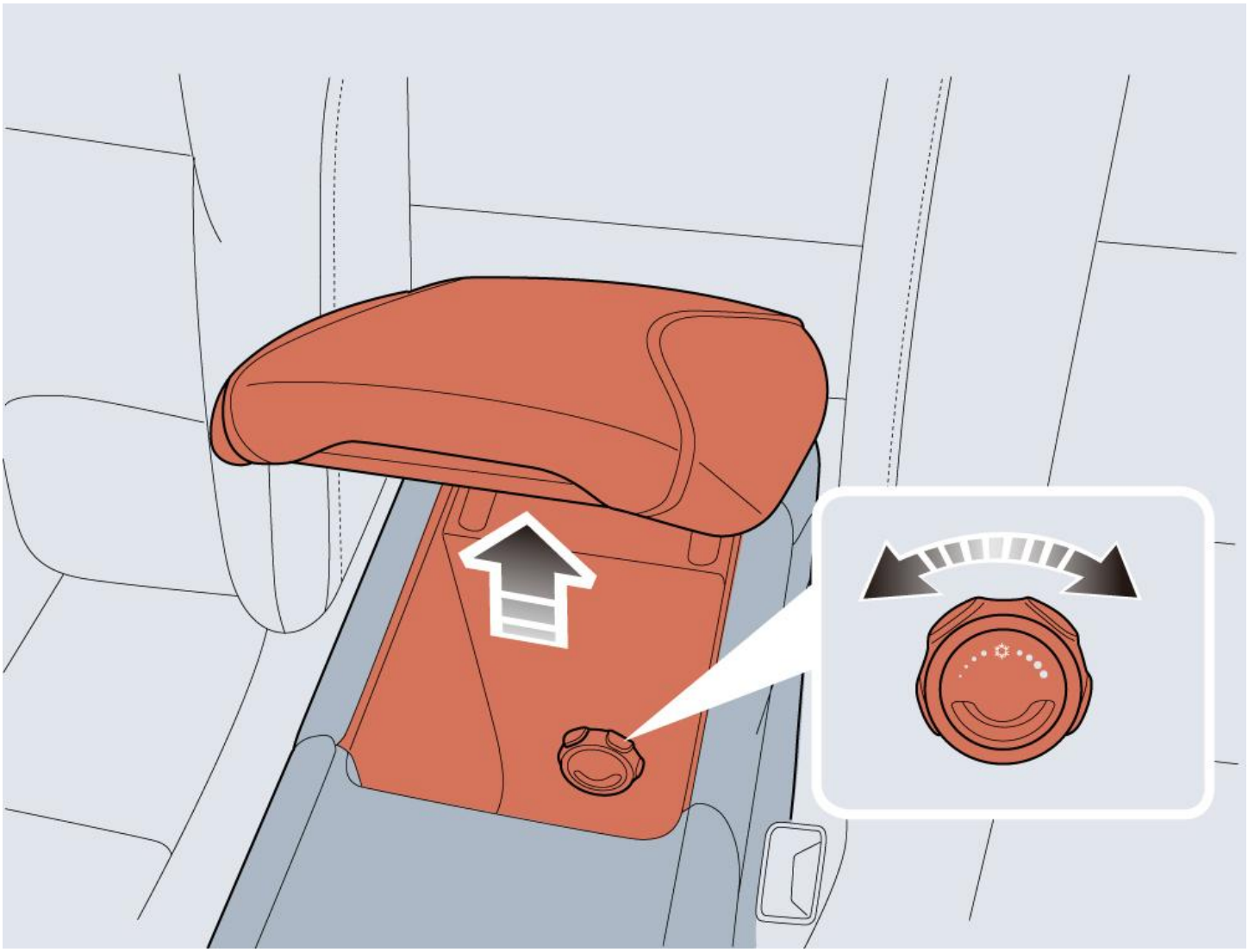

Lift the centre console armrest to open the centre console armrest box.

Lower the lid and gently press the centre console armrest to close the centre console armrest box.

Note: The centre console armrest can slide forward and backward. To open the armrest box, slide the centre console armrest to the rearmost position first.

An air outlet vent adjustment knob is built into the centre console armrest box of this vehicle.

When the vehicle is powered on and the rear A/C Face function is turned on, this knob can be used to adjust the volume of air entering the armrest box.

Centre Console Cup Holder

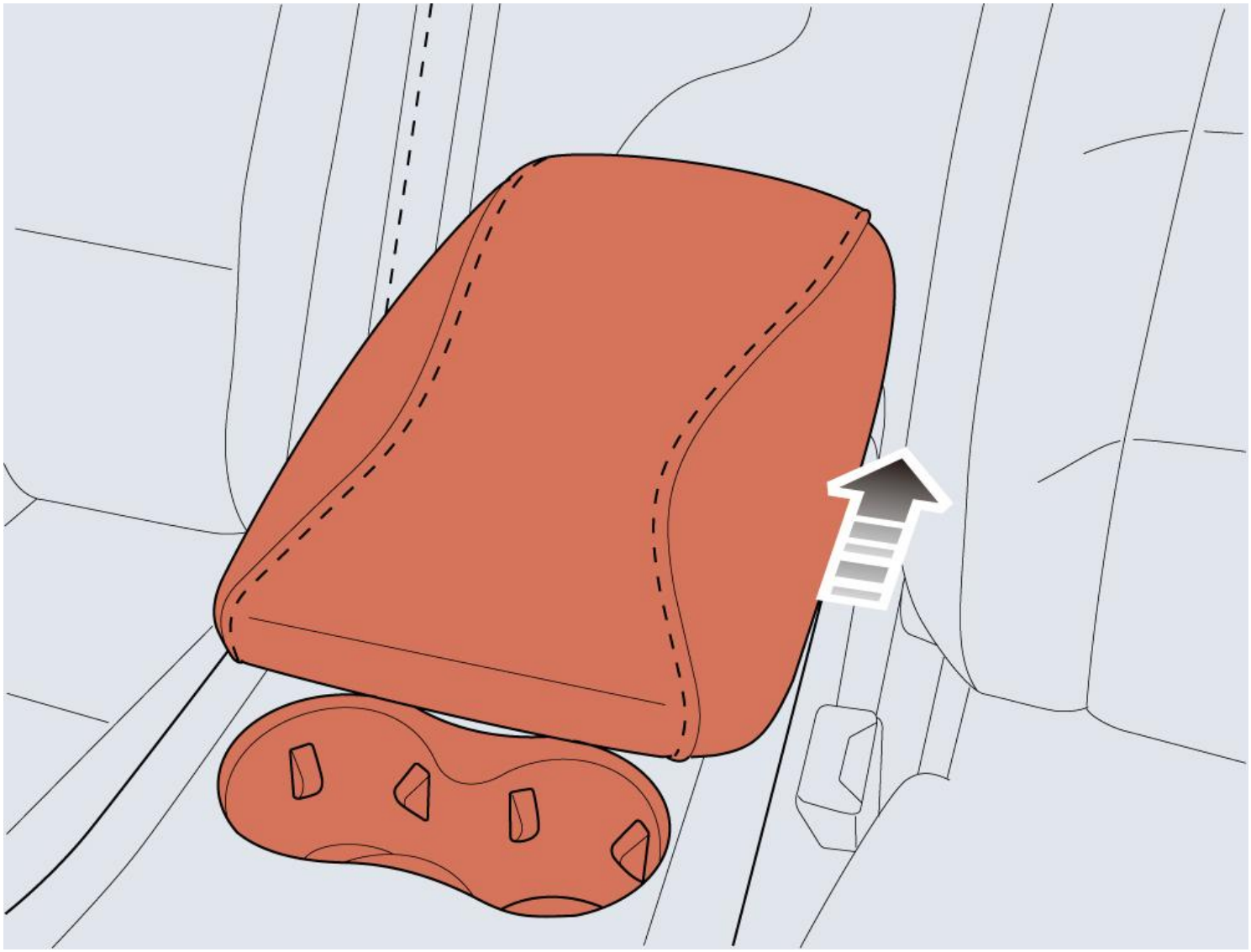

Slide the center console armrest back to reveal the center console cup holder.

The center console cup holder is an open configuration, sealed drink cups or bottles can be directly placed in the holder.

Rear Armrest and Rear Cup Holder

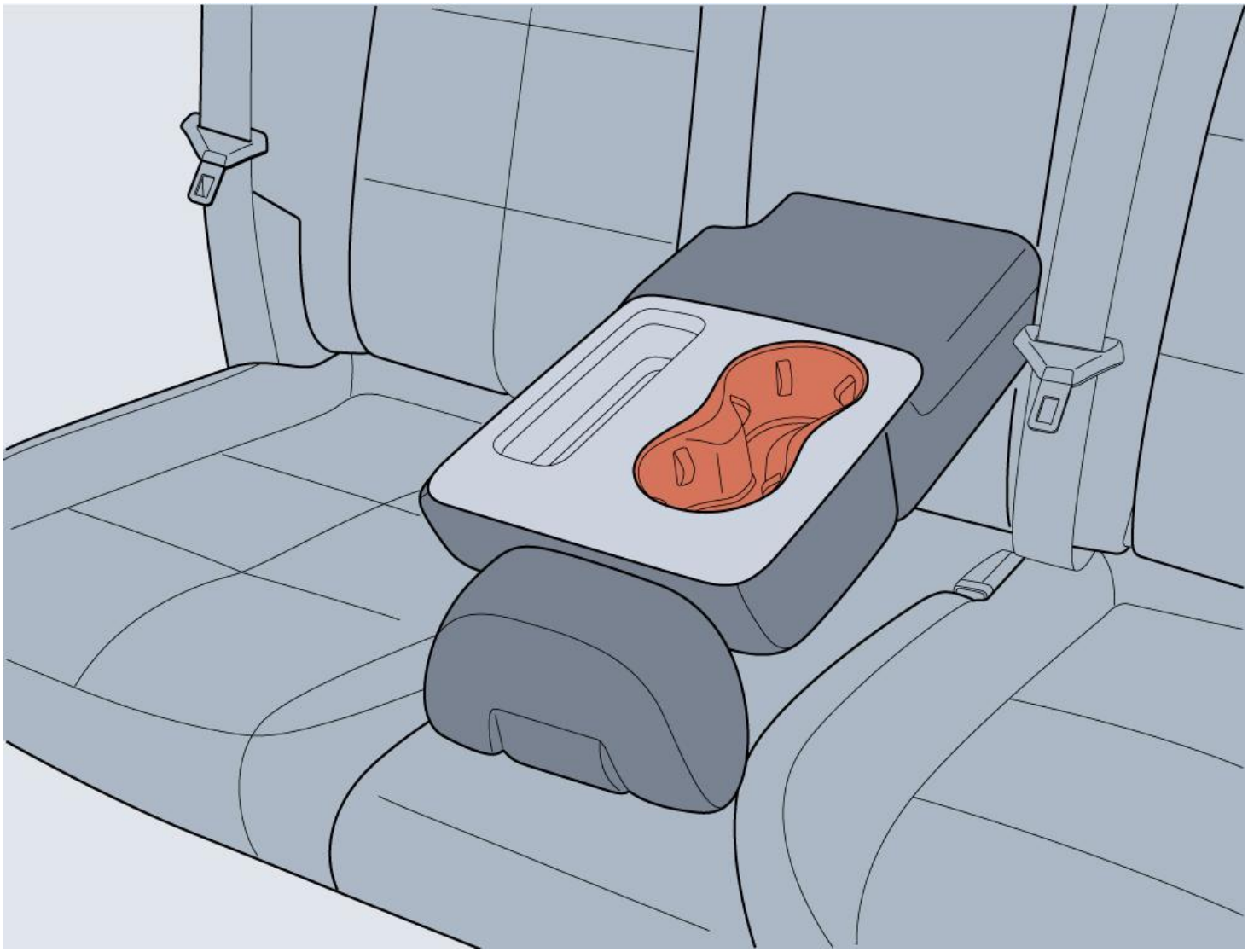

Note: The rear cup holder is incorporated into the rear armrest and can be folded into the middle of the rear seat backrest, to use the cup holder, tilt the arm rest forwards.

Tailgate

Tailgate

In severe winter conditions, frozen water may make it more difficult to open the tailgate by operating the tailgate mechanical switch. In this situation you are able to open the tailgate as follows:

1. Use the Mobile Phone APP, follow the instructions to remotely unlock the tailgate;

2. Use the screen menu in the cabin, trigger the tailgateunlock function.

Warning: Do not try to release the frozen mechanical switch using tools or applying excessive force.

Warning:

- **If the tailgate can not be closed or the weatherstrip between the body and tailgate is damaged, be sure to close all windows during driving, select the face distribution mode of the air conditioner, and set the blower to maximum speed, so as to reduce the chance ofsurrounding pollutant gases entering the vehicle.**

- **Prior to opening or closing the tailgate always ensure there are no people or objects that may obstruct operation. This may cause physical harm or damage.**

- **In cases of an extreme slope, the tailgate may not be electrically opened or fully closed due to the change of the centre-of-gravity position.**

- **During manual operation of power tailgate, avoid violent or rapid operation, which may damage the power tailgate system.**

Warning: If the system thermal protection is triggered due to continuous operation of the power tailgate for several times within a short period, the system will suspend the power opening/closing function. In this situation, the tailgate can be fully closed manually once, the function of power tailgate system will be restored after 3 minutes.

Warning: If the anti-pinch function of the power tailgate is triggered for several times consecutively, the system will suspend the power opening/closing function. In this situation, the tailgate can be fully closed manually once to restore the function of power tailgate system.

Warning: If the power tailgate system fails, and the relevant warning message "Close trunk manually/Switch to P gear" accompanied by the warning icon in the message centre of instrument pack, please contact an Authorised Repairer.

Conventional Opening/Closing Mode of Power Tailgate

The power tailgate can be operated only when the vehicle is in P/N gear.

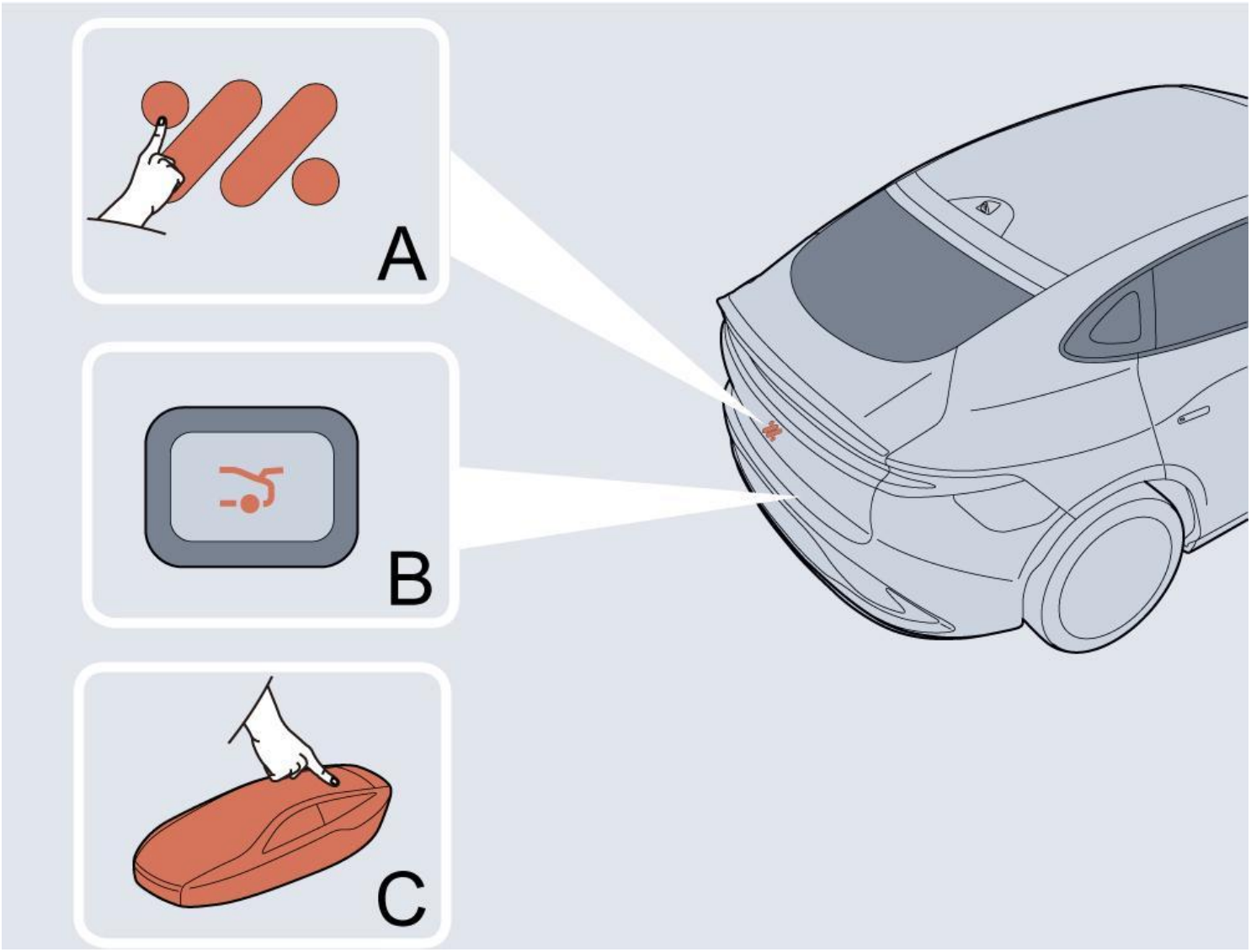

The electric tailgate can be opened or closed in the following ways:

1. When the user is outside the car, if the vehicle is unlocked or the matching key is within 1 meter around the tailgate, press button A to open the electric tailgate; Press button B to close the electric tailgate(Button B is located on the inside of the tailgate).

2. When the user is in the car, long press the tailgate switch in the Home interface of the center screen to open or close the tailgate.

3. Use the smart key to open/close the tailgate: When the power system is off, long press the smart key (Figure C), and the tailgate will automatically open or close.

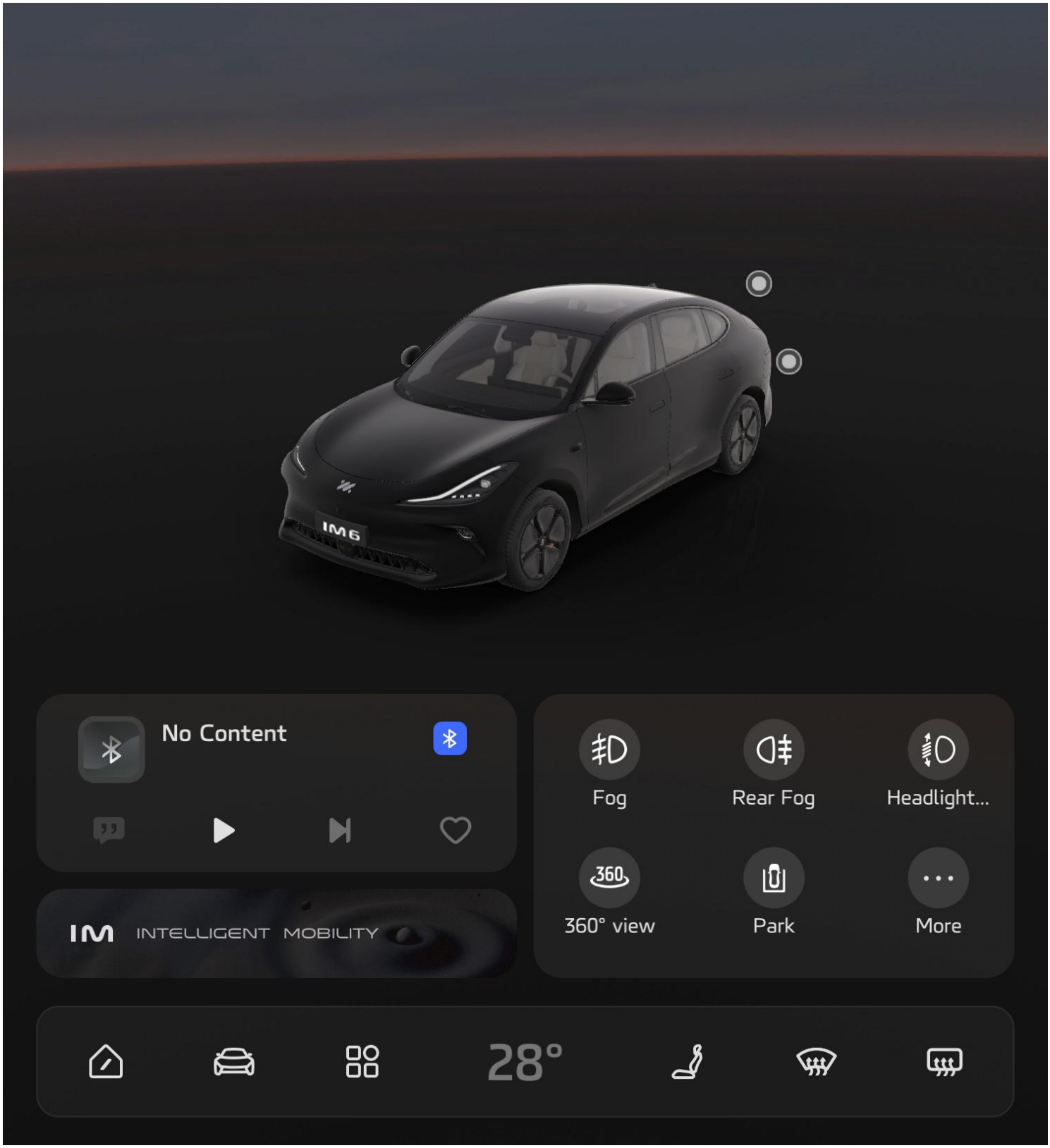

Note: The power tailgate may not function fully at extreme temperatures.

Note: After the tailgate has been opened for 15 minutes, the power tailgate function will be disabled in order to save power.

Note: During automatic car washing, the vehicle remains locked to prevent the tailgate from opening due to accidental operation of the tailgate switch.

If the tailgate fails to fully open to its preset height or fully closed, manually close it once slowly and completely to restore the functions of power tailgate system.

Note: During manual operation of power tailgate, avoid violent or rapid operation, so that the power tailgate system will not be damaged.

Opening Height Setting of Power Tailgate

The user can set the opening height of the electric tailgate on the central screen, or by long pressing the tailgate close button, the electric tailgate controller will record the latest opening height value.

Note: Each time the power tailgate opens, it will be at a height from minimum to maximum as set by the user.

Setting mode 1:

1. After the tailgate is opened, drag the tailgate to the desired height and ensure that it is stationary.

2. Press and hold the tailgate close button for more than three seconds. A buzzer will sound when the setting is successful.

Setting mode 2:

Enter the tailgate height setting interface on the center screen, slide the height setting slider to the desired height position.

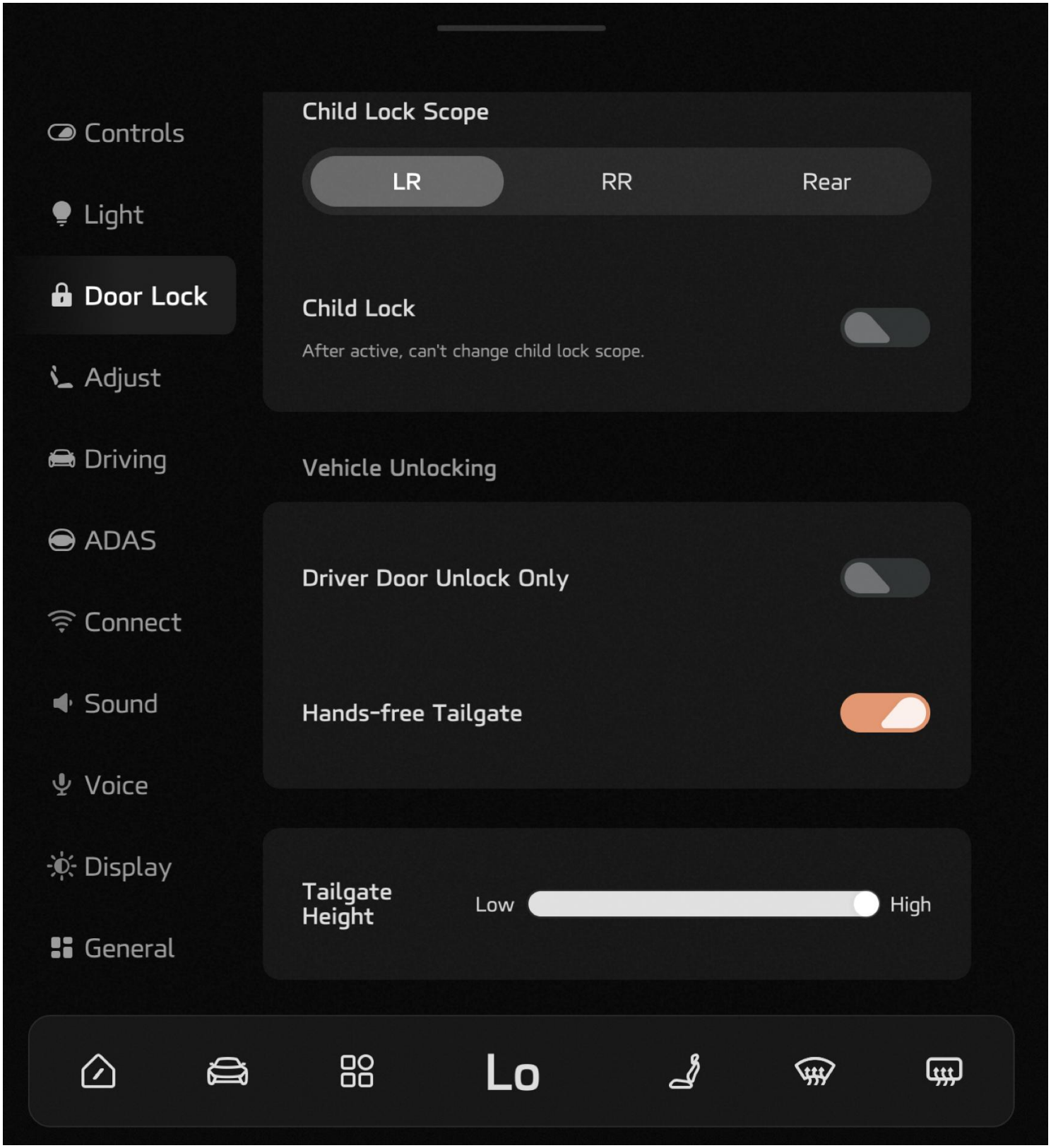

Kick Sensing Function

When the valid intelligent key is within the effective range of the tailgate, the tailgate can be opened via kick sensing.When the vehicle is unlocked, the tailgate can be opened directly through the kick sensing mode.

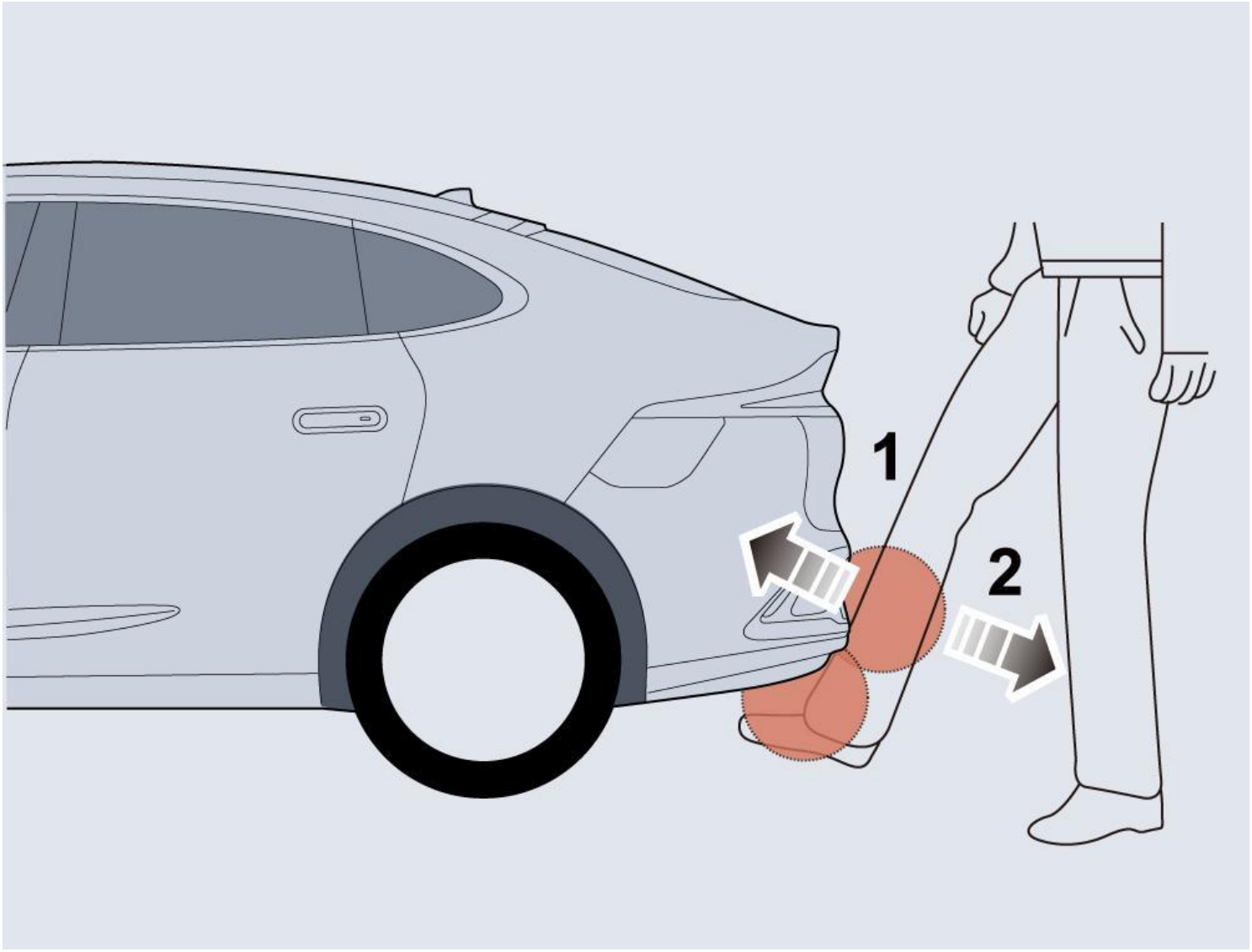

To open the tailgate using the foot sensing function, stand in the middle behind the vehicle as far as possible, move your foot and lower leg quickly to a position (1) as close to the rear bumper as possible, your lower leg must be in the upper sensor area and your foot must be in the lower sensor area, then move your foot and lower leg quickly away from the sensor area (2), and the tailgate will be opened automatically. The kick sensing function is enabled by default. The user can turn off the kick sensing function by "Setting - Door Lock - Tailgate open sensing" on the central screen. When washing your car or performing maintenance and service work near the rear bumper, to prevent the tailgate from opening due to accidental triggering of the sensing function, please turn off the foot sensing function with the soft switch on the entertainment display. In some cases, the tailgate opening by foot sensing will not be available or will be limited, so you can open the tailgate in other ways. Whilst the car wash mode is enabled, the kick sensing function cannot be used.

Tailgate Emergency Open

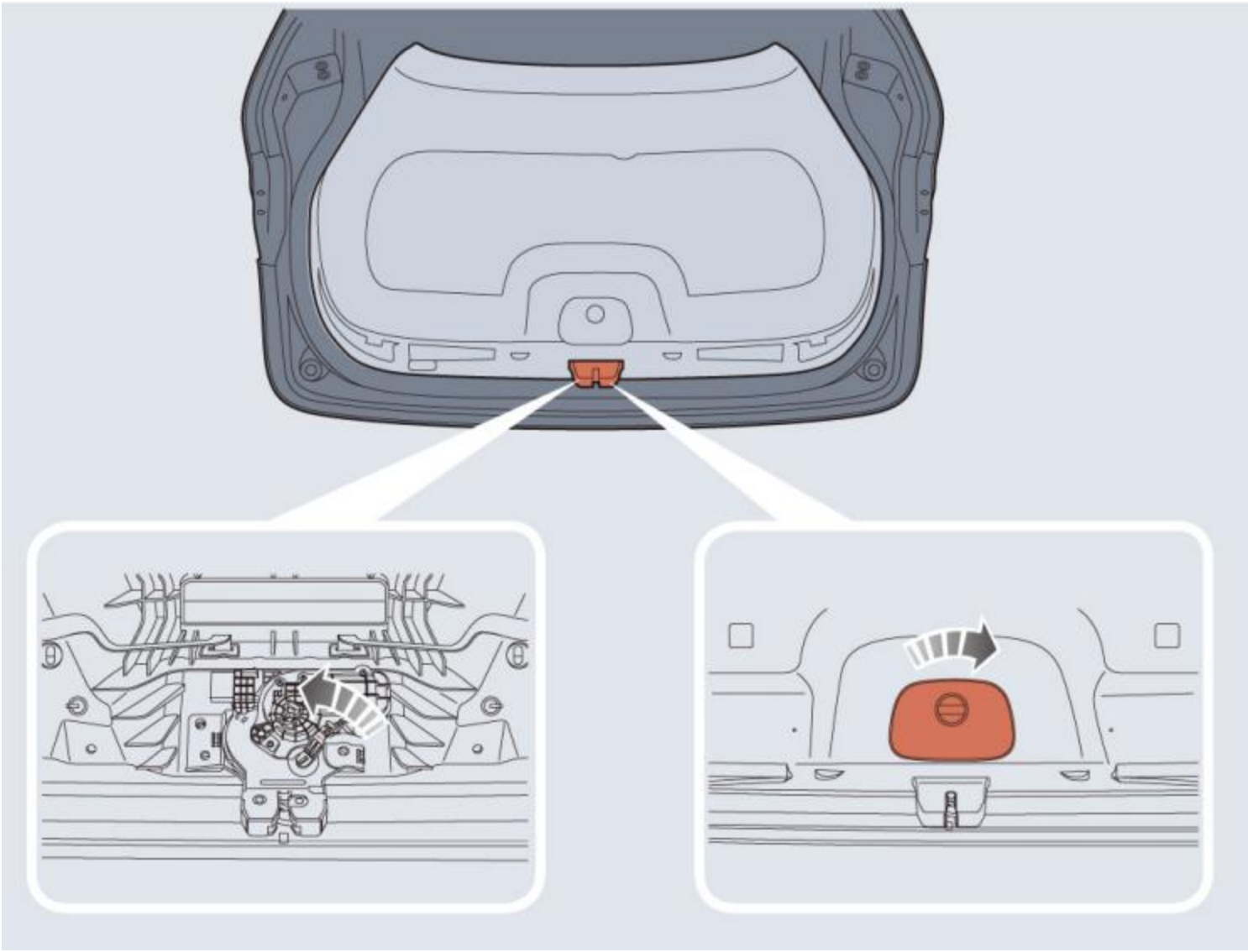

In the event of an electrical failure, a tailgate emergency open switch is located on the inner side of tailgate lock.

Lower the rear seat to gain access to the loadspace so that the emergency open plug on the tailgate trim plate can be touched.

Rotate the retaining clip to release the plastic cover to gain access to the mechanical release mechanism inside the tailgate..

Loadspace Loading

When luggage is carried in the loadspace, the items should be placed as low and as forward as possible, so as to avoid the cargo shift in the event of an accident or emergency braking.

Folding the rear seats can increase luggage space, refer to "Seat Adjustment and Relevant Functions" section.

Drive carefully and avoid emergency braking or harsh acceleration when large or heavy items are carried.

Warning: DO NOT exceed the gross vehicle weight or the permitted front and rear axle loads, failure may result in vehicle damage or serious injury.

Warning: Ensure that the rear seat backrests are securely latched in the upright position when loads are carried in the load space behind the seats.

IMPORTANT
Relevant traffic laws and regulations must be observed when loading, and the vehicle shall not be driven with the trunk lid (or tailgate) open.

Towing

General Towing Safety

Warning: Exceeding any load limits advised is dangerous. Consult the recommended load limits and loading prior to any journey.

Warning: Excessive towing loads reduce front tyre traction and steering control, too smaller trailer nose load can make the trailer unstable and cause it to sway.

Your vehicle can tow a trailer if you carefully observe load limits, use approved equipment, and follow the towing guidelines. Always check load limits before towing.

Towing loads in excess of the maximum towing weight can seriously affect vehicle handling and performance, this could damage your vehicle and drive-train.

When adding a towing device to the vehicle

When towing, all rear vehicle lights must remain visible to road users behind the vehicle and must not be obscured / partially obscured.

If vehicle light sources are obscured by objects connected to the tow bar or towed object, a secondary lighting source shall be used such as a lighting board.

When not towing, the fitted towing device must not obscure any lighting source. If the towing device obscures or partially obscures a lighting source such as the fog lamp it must be removed or retracted when not towing.

Tow bars

Only genuine approved towbars should be fitted to your vehicle. Only use the attachment method specified by the vehicle manufacturer for securing the towing hitch. Contact an Authorized Repairer for more information.

Safety chains

Safety chains must be used as a precautionary measure to avoid the trailer becoming unintentionally unhitched. Make sure the safety chain is securely attached to both the trailer and the vehicle prior to departure.

Gradients

Where possible, when towing, you should plan your journey to avoid steep gradients. The advised brake towing mass stated assumes a maximum gradient capability of 12% . Where possible it is recommended you drive on gradients less than 12% . Follow the trailer associations recommendations for suitable roads.

Running in period

Avoid towing a trailer during your vehicles first 1000 km.

Tow Mode

Your vehicle is equipped with a tow mode, which can be enabled in the following two ways:

1. You can turn on tow mode through "Central Screen - Setting - Driving - Tow Mode";

2. Install the electrical components of the trailer directly, and you will receive a reminder to turn on tow mode in the Central Screen.

The following situations will result in the inability to enable tow mode:

- When the vehicle is in a non-P gear;
- When the vehicle is in service mode;
- When the vehicle is in the super energy-saving mode;
- When there is a fault with the vehicle suspension.

IMPORTANT

- When tow mode is enabled, ADAS functions will be restricted or disabled.
- When tow mode is enabled, the super energy-saving mode is unavailable.
- When tow mode is enabled, the suspension adjustment function is unavailable.
- When tow mode is enabled, disable the tailgate soft switch.

Note: After the electrical connection is completed, if the trailer fog lights are detected, the rear fog lights of the vehicle will be disabled and the trailer fog lights will be enabled.

Infotainment

System Booting and Account

Boot Guide

When the vehicle is delivered, it is advised that initial starting is under the guidance of the sales staff.

1. After starting the vehicle, please activate the online function of the vehicle following the guidance of the sales staff;

2. Then use User to scan the QR code to log to your personal travel account;

3. After a successful log in, booting ends.

Privacy Policy

1. After logging in to your personal account, you need to sign the Privacy Policy;

2. The user can use the vehicle normally after signing the current "Privacy Policy";

3. If the user has doubts about the relevant regulations of the "Privacy Policy" and does not agree, some functions of the vehicle cannot be used.

Account Login

Users can log in or switch personal travel accounts through "App list - User".

Smart Screen

Smart Screen Interface Description

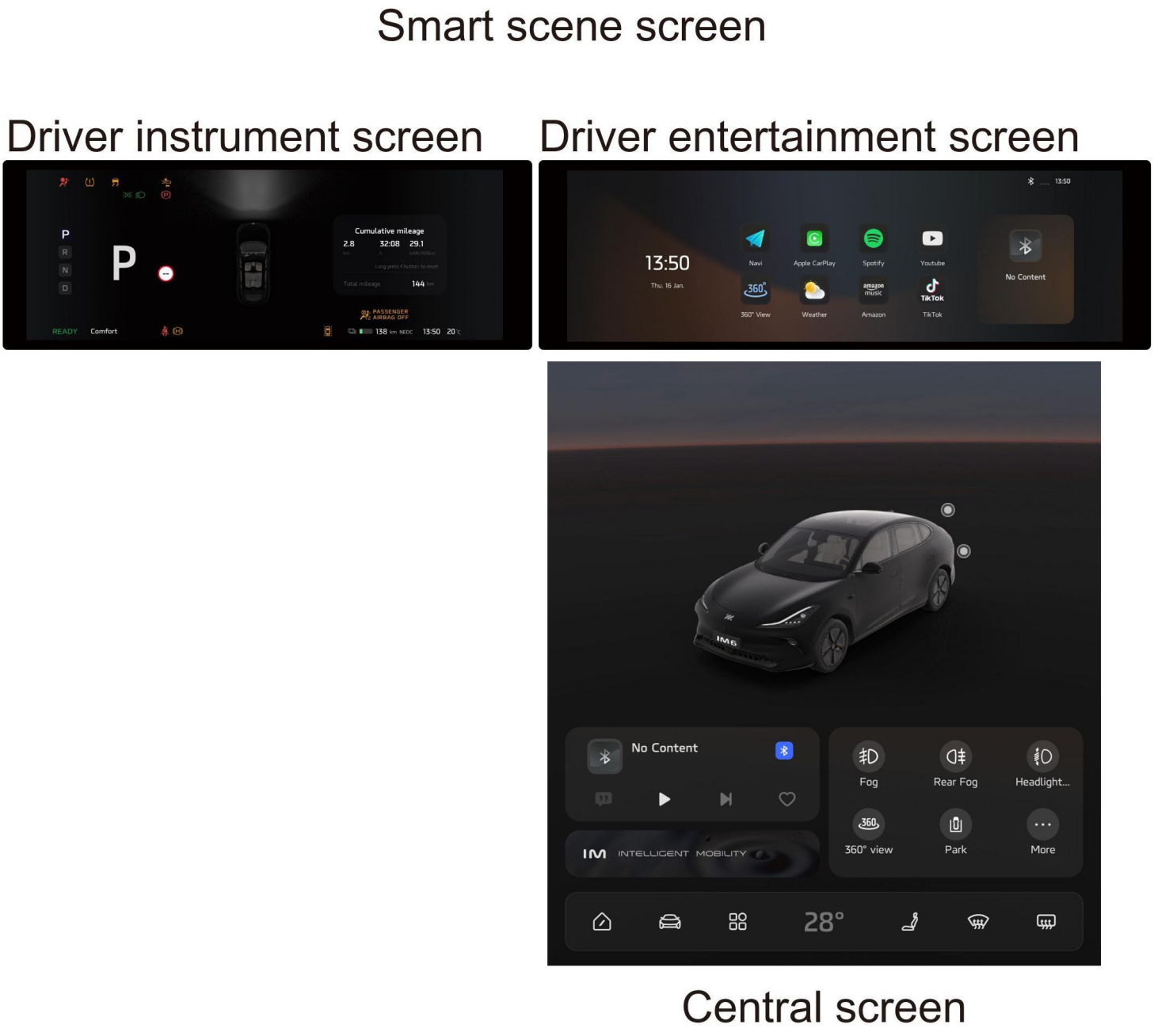

Note: The smart scene screen includes driver instrument screen and driver entertainment screen.

Smart Screen Interface Guide

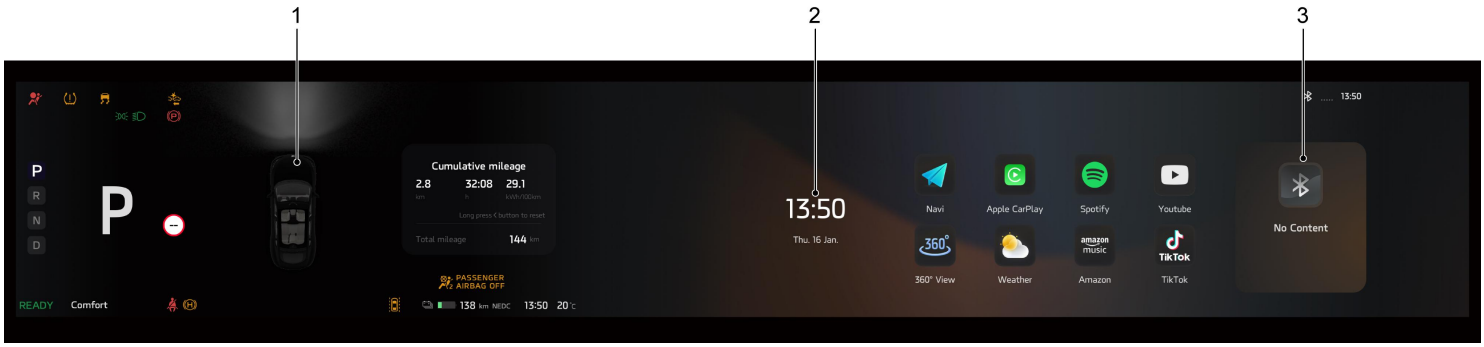

The half-screen interaction mode includes:

1. Instrument and Information

2. Time and date

3. Entertainment

Note in respect of BSD:When the driver selects the left direction indicator, and the speed is below 20 km/h, objects and surrounding conditions detected by the front left blind spot area are displayed on the driver instrument screen; when the speed is greater than 20 km/h, the objects and surrounding conditions detected by the rear left blind spot area are displayed on the driver instrument screen. When the driver selects the right direction indicator, objects and surrounding conditions detected by the rear blind spot area are displayed on the driver entertainment screen.

Dynamic Zone Tracking(DZT) : When the vehicle speed is lower than 30km/h and the right blind spot image is triggered, pedestrians or non-motorized vehicles with collision risk will be marked with a red box in the blind spot image.

System Description

Instrument display

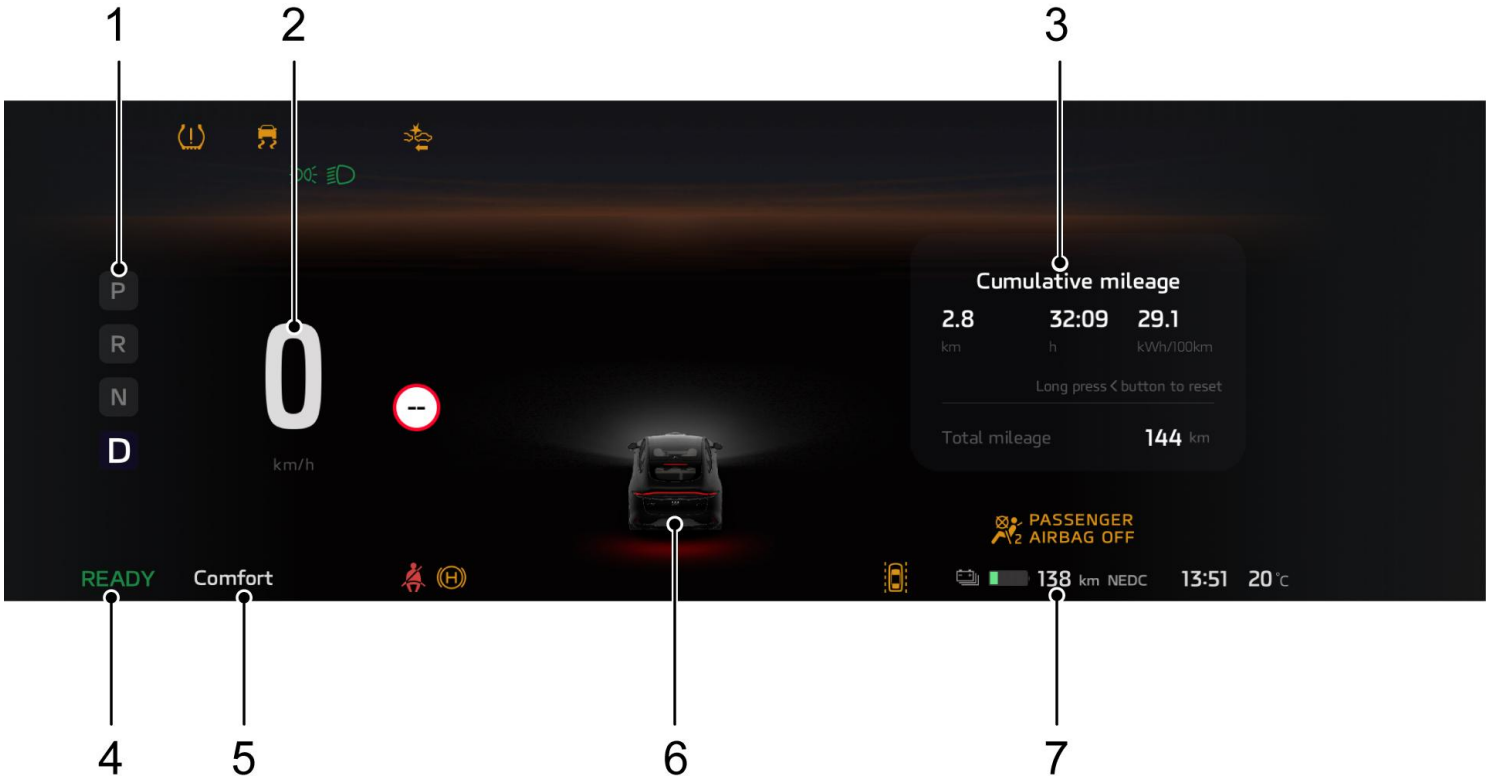

1. Gear display

2. Vehicle speed display

3. Card information area

4. System ready indicator

5. Driving mode

6. Mixed reality vehicle info

7. Driving range

Note: Card information includes fixed information and temporary information;

Fixed information includes: "Energy consumption", "Current Mileage", "Cumulative mileage", "Tyre pressure", "G value", and "Moment distribution of front and rear axles";

Temporary information includes: "Alarm card", "Distance adjustment", "Call reminder", etc.

Central screen display

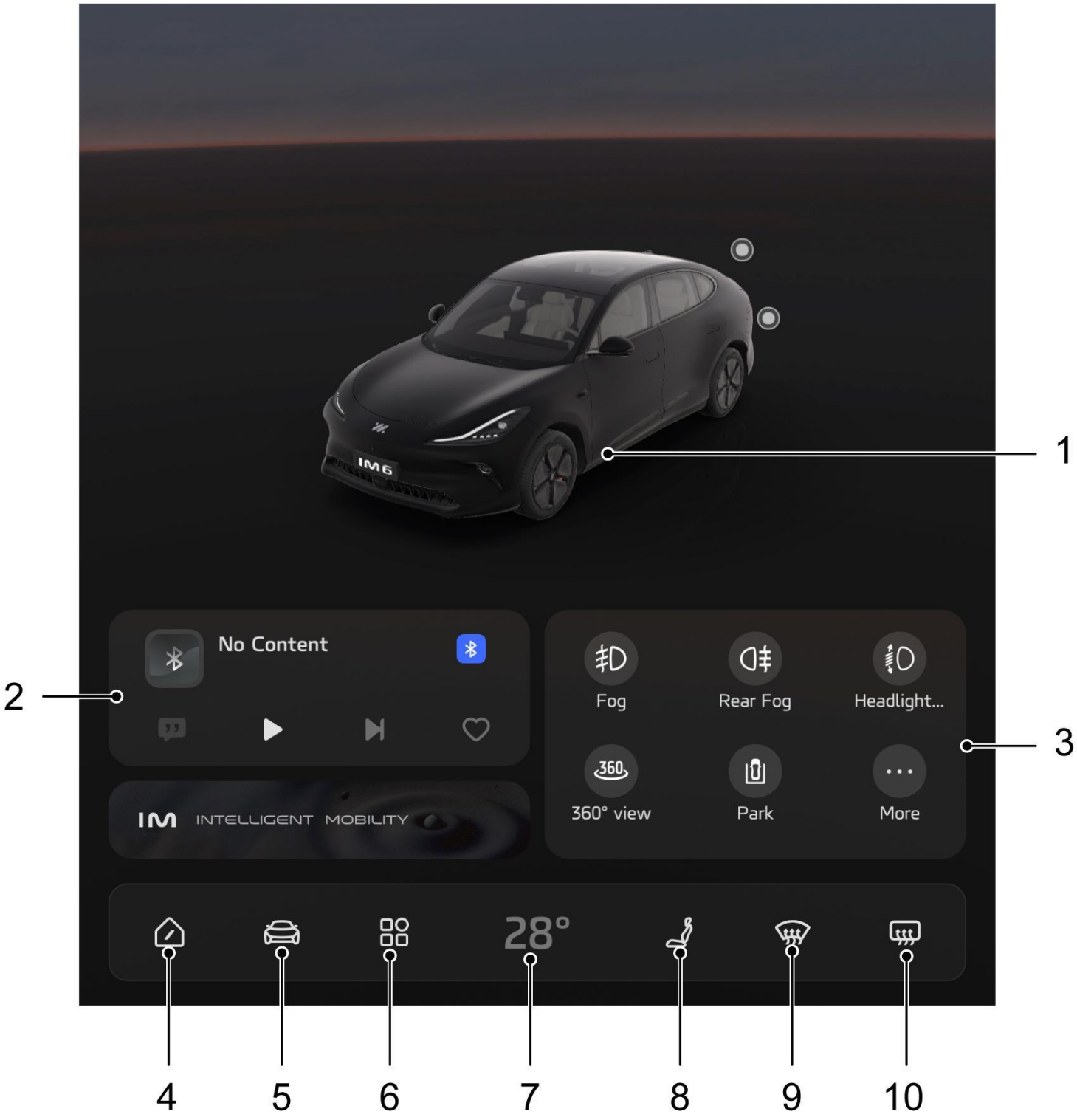

1. 3D vehicle model

2. Entertainment

3. Quick Controls menu

4. Home button

5. Settings

6. App list

7. Air conditioning

8. Seat Menu

9. Windscreen demist

10. Rear windscreen demist

App list*



The app list includes: One Touch iAD, My Car, AVM, Music, Theme, Scene Mode, Phone, DVR, USB, User Manual, Apple Carplay, Android Auto, NaVi, Youtube, User, Maintenance, RescueCall, Weather, Amazon, Spotify and TikTok.

Note: Grab inwards with five fingers on the page of central screen to enter the app list; Swipe down with a single finger from the top horizontal line to exit the app list.

One Touch iAD

Refer to "One Touch Park","One Touch Escape","One Touch Side" and "One Touch Reverse" in "Intelligent Drive System*".

My Car

My Car includes: vehicle charging, discharge, energy consumption, notification centre and other related information; refer to "Charging" for details.

1. Energy Consumption: Includes the energy consumption graph.

2. Charging capacity setting:

When the vehicle is not being charged, go to "My Car" > "Set" and drag the setting button to your desired setting.

When the vehicle is being charged, tap the charging status under "3D vehicle model" to enter the charging page, and drag the setting button to your desired setting.

Note: The charging capacity setting has three positions; the charging limit has the power-off memory function if the user has set the charging limit. If the traction battery capacity is higher than the charging limit, the vehicle cannot be charged.

3. Discharge:

AC discharge enables the power stored in the traction battery to be output through a special discharging device at a voltage of 220V and to be used by external electrical appliances.

After inserting the discharging device, the user must enter the charging page and select "Discharge".

Note: The cut-off power of external discharge can be set by dragging the slider to the desired setting, and the minimum setting for power discharge is 20%.

IMPORTANT
It is not possible to charge the vehicle whilst a discharge device is connected.

4. Settings: Include the range standard and available battery energy status.

Note: The setting related interfaces are different depending on the configuration.

Surround view (AVM)

The user can tap the surround view button to check the surroundings of the vehicle on the driver entertainment screen; refer to "360 Surround View" for details.

The user can enter the Surround View Mode in the following ways: When the vehicle is powered on and the speed is below 15km/h, tap the Surround View button in the app list on the central screen; or shift into R gear to enter Surround View; or press the custom Surround View button on the steering wheel.

The user can exit Surround View in the following ways: Tap the "X" button on the page or press the home button; or increase the

speed to above 10 mph (15 km/h) while driving in D gear; Surround View automatically exits after shifting into P gear after 3 seconds; and also after automatic parking is completed.

Note: Tap to enter "Settings > General > Custom Keys" on the central screen to set the custom Surround View button on the steering wheel.

When the vehicle is in R gear or the APA system is enabled, Surround View cannot be turned off and the "X" button is hidden. The Surround View cannot be turned off even by tapping the home button.

The front view and rear view buttons are hidden, they can be displayed by tapping the top view area of the Surround View.

If there is an obstacle approaching the vehicle, the vehicle will display the radar wall information at each location in white, yellow or red depending on the distance.

Select the Settings button on the upper right of the top view of Surround View, and select the related setting item. For example, Surround View enabled at start-off, radar alarm tone, and Surround View transparent chassis.

Warning: Please use the Surround View function with caution while driving so as not to affect driving safety.

Music

Tap to enter the Music function; refer to "Music" for details.

Scene Mode

The user is able to preset sub functions such as air conditioning, seat position, screen etc for various scenarios.

These include Nap Mode, Pet Mode etc...

Nap mode: When the vehicle is in P gear and not in an automatic parking condition, the energy range is higher than 46 miles (70 km) or the vehicle is being charged, and the seat behind the driver seat is not occupied, the centre console will be locked, the seat will be adjusted to a comfortable angle, the windows will be closed, the notification audio will be muted, the air conditioning will be turned on, and the screens, sound, and atmosphere lamp will enter the nap mode.

Note: When the driving range drops below a preset level, the vehicle will prompt the driver to exit the nap mode.

Pet mode: When the user needs to leave a pet in the vehicle, pet mode can be turned on; the vehicle should be in P gear and not in an automatic parking condition, the energy range is higher than 46 miles (70 km) or the vehicle is being charged; at this time, the centre console will be locked, the windows will be closed, the air conditioning will be maintained, and the screens will enter the pet mode.

Note: When the driving range drops below a preset level, the vehicle will automatically exit the pet mode. At this time, the window will be opened by 5%.

Phone

Tap to enter the Phone page; refer to "Phone" for details.

Digital Video Recorder (DVR)

After tapping the DVR button, the driver entertainment screen will display the real-time images; the central screen displays a list of

recorded videos, which can be played back by tapping, the settings can be selected on the upper right of the central screen; refer to "Digital Video Recorder" for details.

The setting items include: video recording switch, speed display, storage and formatting.

The Edit button next to the Settings on the central screen can delete multiple video files.

USB

Users can insert a USB flash drive into the car interface, click on the USB disk video to identify the video files in the USB flash drive and play them.

Note: It is against the law for drivers to watch videos while driving.

User Manual

Tap to open the user manual.

Apple CarPlay

Tap on the Apple CarPlay icon and make the CarPlay connection in "Settings - Connections - Bluetooth" according to the prompts on the driver's entertainment screen. Once the connection is successful, the Apple CarPlay functional interface will be displayed on the driver's entertainment screen.

Note: This function requires an iPhone that supports Apple CarPlay. For the specific phone models that support this function, please refer to the Apple official website.

For the introduction of the functions supported by Apple CarPlay, please refer to the Apple official website.

Android Auto

Tap on the Android Auto icon and make the Android Auto connection in "Settings - Connections - Bluetooth" according to the prompts on the driver's entertainment screen. Once the connection is successful, the Android Auto functional interface will be displayed on the driver's entertainment screen.

Note: This function requires an Android phone that supports Android Auto. For the specific phone models that support this function, please refer to the Google official website.

For the introduction of the functions supported by Android Auto, please refer to the Google official website.

NaVi

Tap to open the navigation maps.

Youtube, Amazon, Spotify and TikTok are all audio and video apps. Users can play music and videos and check news through them.

Note:Amazon and Spotify can only be used if you sign in to an existing account.

User

Tap to open User. Users can log in to their account by scanning a QR code, refer to "Boot and account" for details.

Maintenance

Tap to enter Maintenance. Users can access information such as the location of authorized repair stations, maintenance records, etc.

Rescue Call

Tap to enter the Rescue Call (E Call) mode.

Weather

Tap to view local weather information.

Vehicle Settings

Settings display

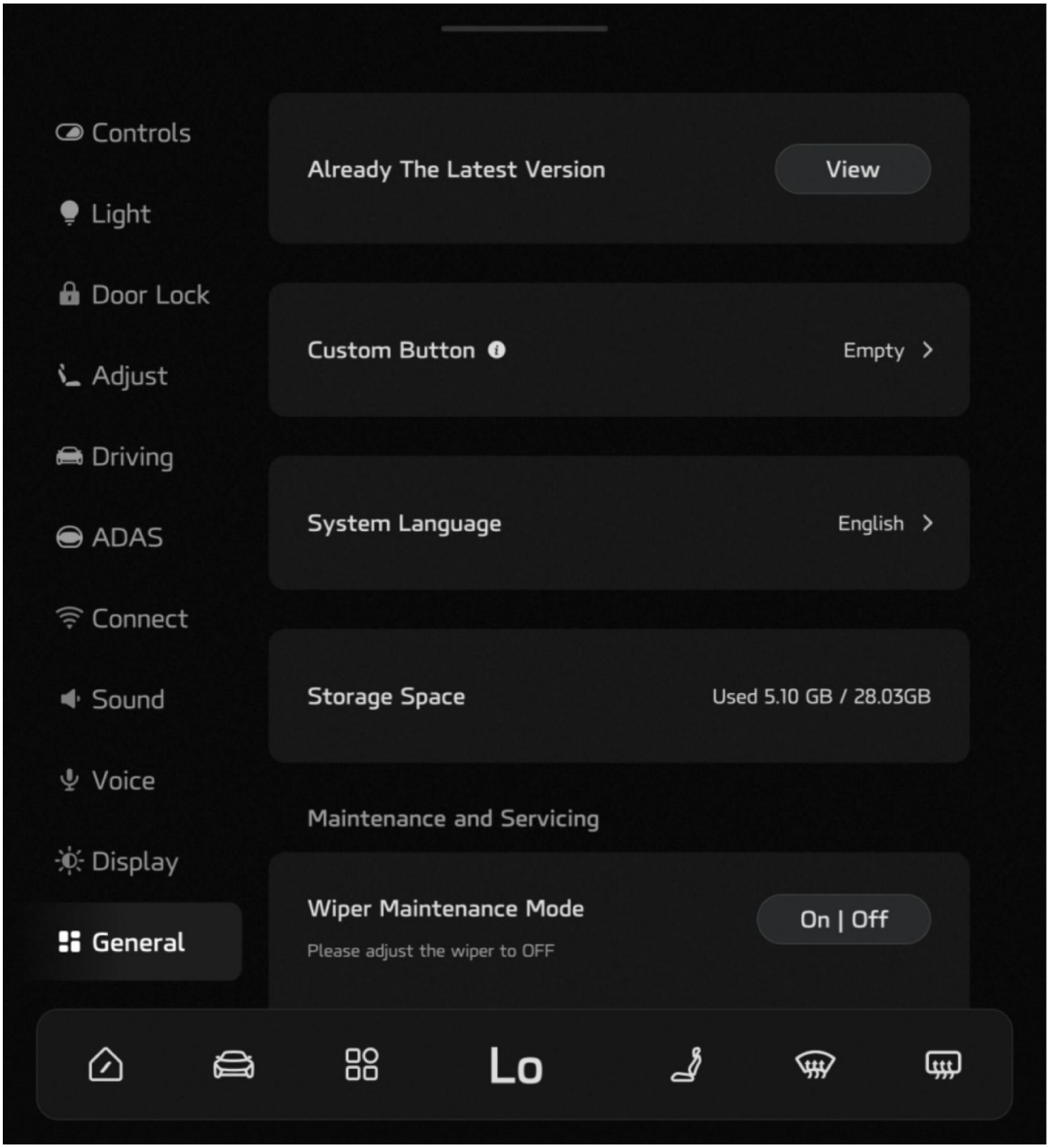

The settings menu includes:

Controls (exterior lamps, wipers,, exterior rearview mirror adjustment, steering wheel adjustment, windows,, energy regeneration

level, body stability control system switch, etc.); refer to "Exterior Lighting", "Coasting Energy Regeneration", and "Steering Wheel Adjustment" for details.

Lights (welcome mode, ambient lighting, door opening warning, reading light, headlamps);; refer to "Interior Lighting" and "Intelligent Light Assist" for details.

Note: The user can set the headlamp delay switch to ON or OFF here.

Door Lock (windows, child locks, vehicle unlocking, tailgate height); refer to "Rearview Mirror" and "Starting the Power System" for details.

Adjust (Driver, Passenger, Seat memory, Driver convenience, Mirror tilt when reversing);refer to "Seat", "Rearview Mirror" and "Steering Wheel".

Driving (driving mode selection, SUPER ECO, ERS, Passenger airbag, Driver Distraction Warning, Driver Fatigue alarm, Tow mode); refer to "Shifting and Driving", "Suspension", and "Auto Hold" for details.

ADAS (Pilot, Proactive Vision Supplement System, Speed Limit Warning*, Forward Collision Warning, Rear Collision Assist, Dynamic Zone Tracking, Lane Departure Assist Mode, Emergency Lane Keeping*); refer to "ADAS" for details.

Link (Bluetooth, Hot spot, Wireless network, Wireless charging, Device Left Behind Warning); refer to "Phone" for details.

Sound (Sound Effect, Panoramic Sound Simulator, Directed Broadcast, Volume, Tone); refer to "Smart Acoustic System" for details.

Voice (Voice language, Voice Wakeup "Hello IM", Greeting switch).

Display (Automatic adjustment, Display Mode, Turn off screen, Screen cleaning mode, Time).

Note: The user can set the brightness or automatic adjustment of the central screen and smart scenario screen; set the appearance of the screen display; and set the time display.

General (custom buttons, system language, storage space, maintenance and servicing, system restore, vehicle power); refer to "Turn On/Off Vehicle Power" for details.

Note:Users can select the required language in "System Language".

Privacy (Global Data Service).

Note: After agreeing to the "Privacy Policy", users can switch on the Global Data Service and obtain the authorization to use DVR, Third-party Apps, Map and Voice for 24 months.

Central Screen Restart

If the central screen "crashes or locks", the user can carry out a reboot by pressing both of the roller switches on the steering wheel at the same time for ten seconds to restart the central screen.



Instrument Pack

Information Displayed in the Instrument Pack

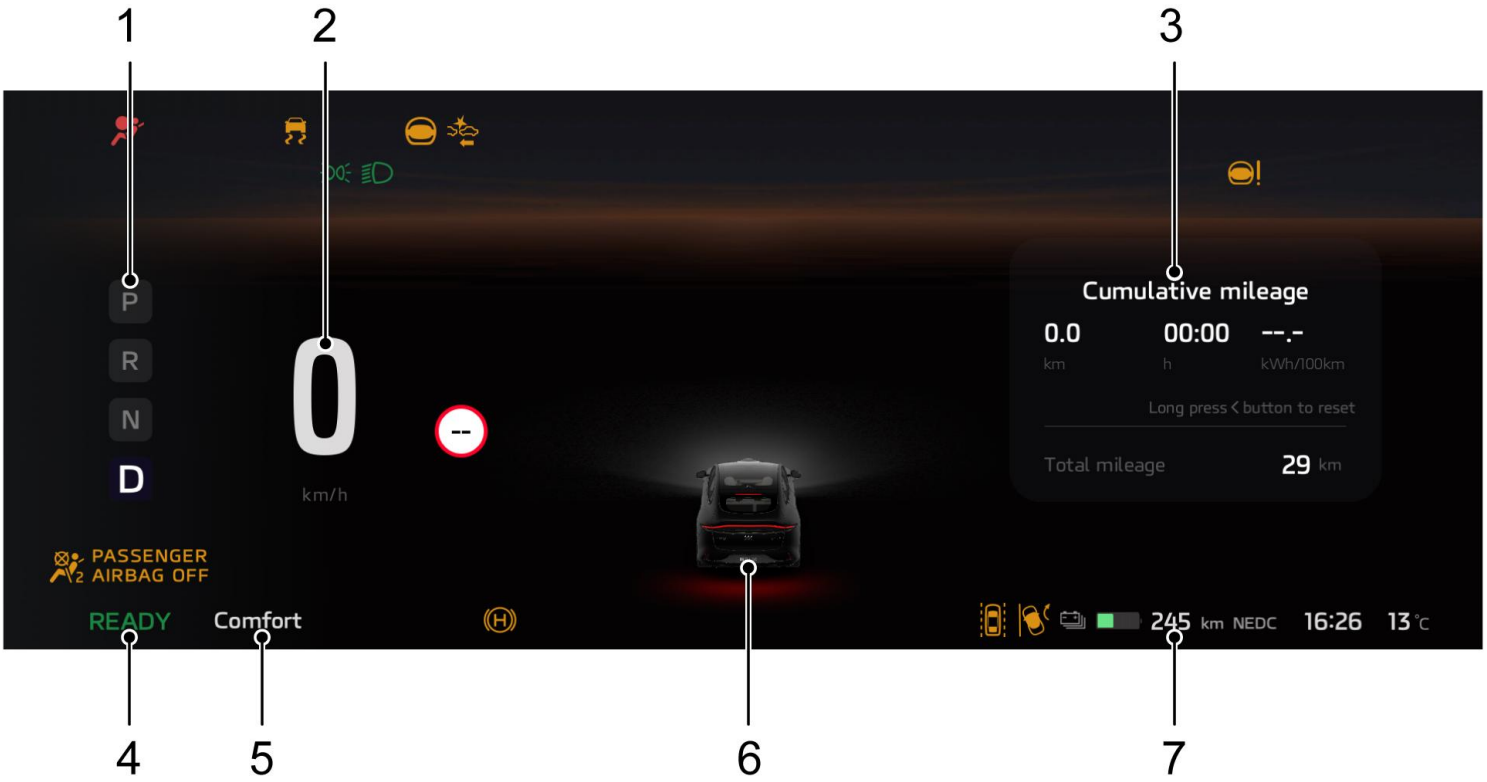

The instrument pack integrates functions such as vehicle status monitoring, alarm, and intelligent drive. When using the vehicle, attention must be paid to the information displayed on the instrument panel to obtain the real-time status of the vehicle.

1. Gear display

2. Vehicle speed display

3. Card information area

4. System ready indicator

5. Driving mode

6. Mixed reality vehicle info

7. Cruising range

8. Outside Temperature

9. Time

10. Vehicle Testing Criteria

11. Last Detected Maximum Road Speed

Note: Due to changes in the settings, function usage, vehicle configuration, software version, etc., the illustrations are for reference only, they may not be the same as your vehicle.

Displayed Information Switching

The user can switch between display information by controlling the right roller of the steering wheel.

1. Press the button to the left and right to switch between the displayed information

2. Press and hold the button to the right to reset the trip computer

3. Short press the button to clear the alarm messages

Warning Lights and Indicators

Name	Icon	Description
Low Beam Indicator		Headlamp low beam is on.
High Beam Indicator		Headlamp high beam is on.
Side/Position Lamps Indicator		Position lamps are on.
Direction Indicator Lamp	 	When the left or right turn signal lamp flashes, the direction indicator lamp on the corresponding side also flashes. If the hazard warning lamps are turned on, both direction indicator lamps will flash simultaneously.
Intelligent Headlamp Indicator		Intelligent high beam is on.
Anti-theft System Indicator		If this lamp illuminates, it indicates that no valid key is detected, in which case please use the correct key.
Front Seat Belt Unfastened Indicator		Driver/front passenger seat belt is not fastened.
Rear Seat Belt Unfastened Indicator	  	Rear left/middle/right seat belt is not fastened.
ABS Malfunction Indicator Lamp		Anti-lock brake system detects a fault. If an ABS failure occurs while driving, the ABS function will be disabled while normal braking will still be available.
Brake System Fluid Level Low or Malfunction Indicator Lamp		If the brake system fluid level is low or the brake system fails, stop the car as soon as safety permits, and switch off the vehicle power.
Electric Power Steering System (EPS) Warning Lamp		If this lamp illuminates, it indicates that the electric power steering system has a general failure related to the steering angle. Please stop the vehicle as soon as safety permits, restart the vehicle and drive carefully to an Authorised Repairer or contact an Authorised Repairer immediately. If this lamp flashes, it indicates that the electric power steering system has a serious failure, and the steering will become very heavy. Please stop the vehicle as soon as safety permits and contact the Authorised Repairer immediately.

		If this lamp illuminates, it indicates that the electric power steering system has a general failure. Please stop the vehicle as soon as safety permits, restart the vehicle and carefully drive to an Authorised Repairer or contact an Authorised Repairer immediately.
Dynamic Stability Control/Traction Control System Warning Lamp		If this lamp illuminates, it indicates that the dynamic stability control system/traction control system has failed. If this lamp flashes while driving, it indicates that the system is operating to assist the driver.
Dynamic Stability Control/Traction Control System OFF Warning Lamp		The dynamic stability control/traction control system is turned off
Hill Descent Control (HDC) ON/Malfunction Indicator Lamp		If this lamp illuminates, it indicates that the HDC function is in the the Standby mode. If this lamp flashes, it indicates that the system is currently in the state of HDC function.
		If this lamp illuminates, it indicates that the HDC function has failed. If this lamp flashes, it indicates that the HDC function is temporarily disabled.
Autohold Status Indicator		The Autohold system is operating to assist the driver.
		The Autohold system has failed.
Electronic Parking Brake System Status Indicator		If this lamp illuminates, it indicates that the EPB is enabled. If this lamp flashes, it indicates that the vehicle is parked on a slope with excessive angle or the electronic parking brake system failed, in which case please park the vehicle on the safe road surface.
Electric Parking Brake System Malfunction Indicator Lamp		If this lamp illuminates, it indicates that the electronic parking brake system has detected a fault. If this lamp flashes, it indicates that the electronic parking brake system is not calibrated.
Tyre Pressure Monitoring System Warning Lamp		If this lamp illuminates, it indicates that a tyre pressure is low. Please check the tyre pressures. If this lamp flashes and then remains ON after a period of time, it indicates the system has detected a fault.
Airbag Warning Lamp		Sensing and diagnostic module, airbag or seat belt has detected a fault.

Low-voltage Battery Charging System Malfunction Indicator Lamp		If this lamp illuminates after starting the vehicle, it indicates that the low-voltage battery charging system has failed. If this lamp flashes, it indicates that the low-voltage battery is low, please start the vehicle as soon as possible.
Power System Ready Indicator		The vehicle power system is ready for running.
Charger/Discharger Connected Indicator		A charging or discharging device is connected.
Charging/Discharging Status Indicator		The vehicle is being charged.
		It indicates charging failure.
Traction Battery Low Indicator		The battery is low. Charge the high-voltage battery pack as soon as possible.
Traction Battery Malfunction Indicator Lamp		The traction battery system has detected a fault. Please drive carefully to a nearby authorised repairer for inspection.
		If this lamp illuminates, it indicates that the traction battery system has a serious failure. Please stop the vehicle and contact an Authorised Repairer for assistance. If this lamp flashes, it indicates the thermal runaway warning. Please stop the vehicle as soon as safety permits and evacuate the vehicle immediately.
Motor Malfunction Indicator Lamp		If this lamp flashes, it indicates that the motor system has a serious failure. Please stop the vehicle as soon as safety permits and contact an Authorised Repairer immediately.
		If this lamp illuminates, it indicates that the motor system has a general failure. Please stop the vehicle as soon as safety permits, restart the vehicle and drive carefully to an Authorised Repairer or contact an Authorised Repairer immediately.
Power System Malfunction Indicator Lamp		The vehicle has detected a fault with this system.
		The vehicle has a serious failure and some functions are restricted.
Drive Power Restricted Indicator		When this lamp illuminates, it indicates that the driving power is limited.
Lane Keeping System Indicator		The lane keeping function is in Standby mode.
		The lane keeping function is activated.

		The lane keeping function has failed.
Lane Departure Warning System Indicator Lamp		The lane departure warning function is in Standby mode.
		The lane departure warning function is activated.
		The lane departure warning function has failed.
Forward Collision Assist System Indicator		If this lamp illuminates, it indicates a function of the forward collision assist system is disabled. When the functions of the forward collision assist system are fully enabled, if the lamp stays on, it indicates that forward collision assist system cannot work correctly.
Radar Malfunction Indicator Lamp		The rear driver assistance system is disabled, the radar is obscured or the system has detected a fault, a corresponding prompt message will be displayed on the instrument pack.
Intelligent Drive System Malfunction Indicator Lamp		Intelligent drive system has failed.
Driver Hands-off Indicator Lamp		Prompt the driver to immediately take full control of the steering wheel .
Driver Monitoring System Indicator Lamp		Driver Monitoring System fails.
Tow mode indicator light		The vehicle has detected the electrical connection of the trailer and the tow mode has been activated normally.
		The vehicle detects the electrical connection of the tow light, but the tow mode is not activated.
		After the tow mode is activated, the electrical connection diagnostic signal is faulty or there is no electrical connection signal.

Warning Message

The upper area of the instrument pack displays the warning messages. The warning messages are mainly classified into:

- Operation Instructions
- System Status Prompts
- System Malfunction Alert

Please follow the text prompts or refer to the relevant control system chapters for the failure cause and appropriate solutions.

Voice

Speech Recognition

The user and passengers can easily communicate with the vehicle by using their voice, allowing you to quickly turn some functions on and off, allowing you to enjoy your journey.

Voice Activation

1. Press and hold the roller on the left of the steering wheel to wake up the voice assistant.

2. The user can use the words "Hello IM" to wake the system, and then say the desired function. The voice assistant will automatically enter standby mode when the conversation ends or the designated function has been completed. You can wake it up again when necessary.

Speech Broadcast and Language

The vehicle supports multi-language broadcasting and language recognition, and the voice broadcasting language follows the system language.

Users can select different conversation languages through "Setting - Voice - Voice language" on the central screen.

Smart Acoustic System*

Volume Adjustment

The volume of vehicle media, voice, navigation, and communication can be adjusted and set through the steering wheel or the volume bar on the screen.

Central screen control: The relevant volume can be adjusted in "Settings > Sound > Volume".

Note: Steering wheel control: The current audio volume can be increased and decreased by turning the left roller switch on the steering wheel up and down.

Volume Compensation with Speed

The vehicle has the function to automatically compensate and control the volume in accordance with vehicle speed.

Central screen control: This function can be turned on or off in "Settings > Sound > Volume Compensation with Speed".

Sound Field Mode

The user can select different sound field modes according to personal preferences,such as Balance, Driver, Rear, Simulation and Custom.

Central screen control: The characteristic sound field function defined by IM can be selected in "Settings > Sound > Sound Effect > Mode".

Note: This feature is model dependent.

Equaliser

The user can select and customize the equaliser effect, which can be selected from four preset modes or adjusted in Custom. There are 16 adjustable horizontal segments, and each longitudinal segment supports an adjustment of ±7dB, all can be operated directly in the operation area, and all adjusted curves can be seen in the preview area. The user is able to set, and name 2 Customised options to personal taste, and the Restore button can be tapped if setting restoration is required during adjustment.

Central screen control: Different types of preset equaliser parameters can be selected or the equaliser can be customized in "Settings > Sound > Sound Effect > Equaliser".

Prompt Tone

The touch tone, notification tone and outside unlock/lock prompt tone can be turned on or off.

Central screen control: The tones can be turned on or off in "Settings > Sound > Tone".

Pedestrian Warning Tone

When electric vehicles are driven at low speed in pure electric mode, the noise outside is significantly low. A pedestrian alert warning device is fitted to alert pedestrians of vehicles moving at low speeds, the system emits a sound through the exterior speakers when the speed is 0 - 12.5 mph (0 - 20 km/h) and gradually decreases until it disappears when the speed exceeds 12.5 mph (20 km/h).

Air Conditioning

Ventilation



1. Front Face Side Vents

2. Front Windscreen Vents

3. Front Face Central Vents

4. Front Footwell Vents

5. Front Window Side Vents

6. Rear Face Vents

7. Rear Footwell Vents

The A/C system is used to adjust the temperature, volume, humidity and cleanness of the air inside the car. Fresh air is drawn in through the air intake grille under the front windscreen and the A/C filter element. Always keep the air intake grille clear of obstructions such as leaves, snow or ice.

A/C Filter Element

The A/C filter element is used to filter the air. To remain fully effective, the filter element should be replaced at the recommended service interval.

Vents Adjustment

Rear Face Vent Adjustment

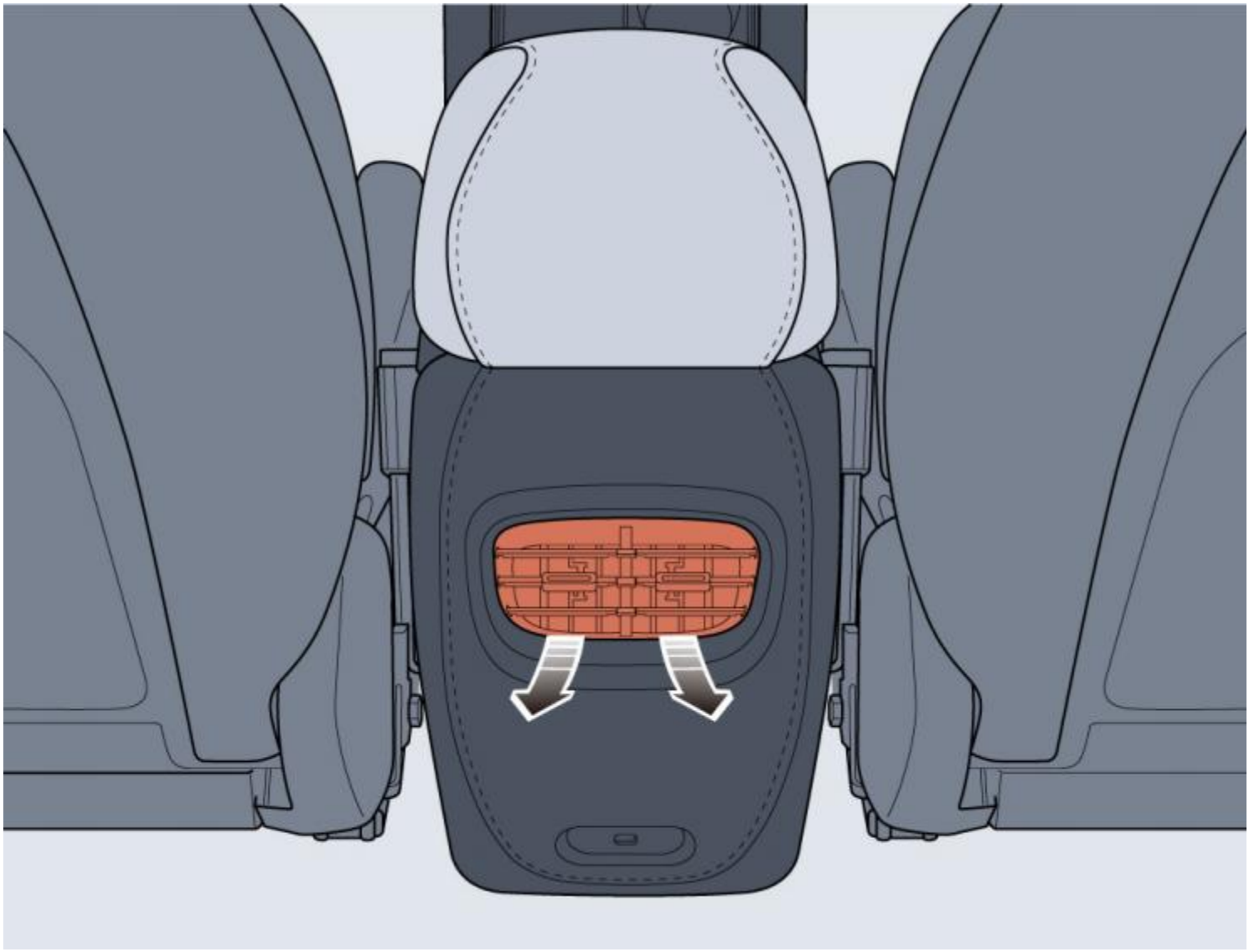

Slide the knob in the centre of the louvres from side to side to open or close the vent. Direct the air flow by moving the knob up and down, or from side to side.

Note: The front face vents can be operated via the central screen. Refer to the description in "Air Conditioning - Control Interface - Front Face Vent Adjustment" for details.

A/C Control Interface

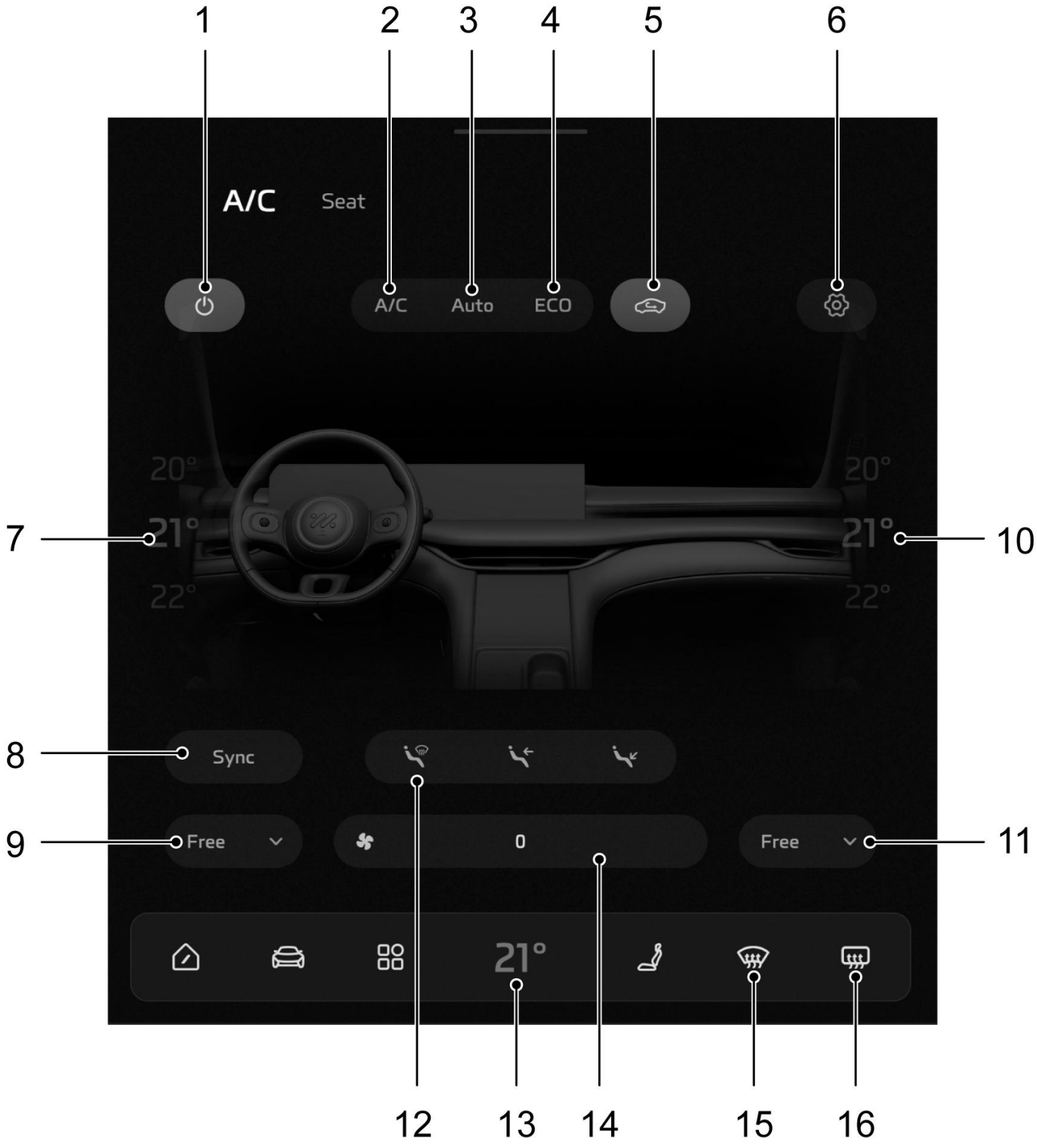

1. A/C System Switch

2. Cooling/Heating Switch

3. Automatic Temperature Control Mode

4. Energy-saving Mode

5. Air Circulation Mode

6. Intelligent Settings

7. Driver Temperature Control

8. Synchronous Temperature Zone Control

9. Air Outlet Mode - Driver

10. Passenger Temperature Control

11. Air Outlet Mode - Front Passenger

12. Control Air Distribution Mode

13. A/C Interface Display Button

14. Blower Speed Control

15. Front Windscreen Defrost/Defog

16. Rear Windscreen Heating

A/C System Switch

Touch the A/C System Switch to switch the A/C system on or off.

Cooling/Heating Switch

When touching the Cooling/Heating Switch, the A/C system will switch between the cooling/heating function.

Automatic Temperature Control Mode

Pressing the automatic temperature control mode touch button will turn on the automatic temperature control function and allow the desired target temperature to be set, the A/C system will automatically adjust the air distribution mode, blower speed, etc. to reach and maintain the set temperature.

Note: In order to ensure normal operation of the automatic temperature control function, all windows and sunroof should be closed, the air inlets should not be obstructed, and the automatic temperature control sensor should not be covered.

The vehicle will initiate the automatic mold prevention function of the A/C after the A/C system is switched off in order to avoid smells and odors.

Energy-saving Mode

The A/C operates at low energy consumption in the saving mode to extend the driving range, and the cooling/heating effect is reduced to a certain extent.

Air Circulation Mode

Touch the Air Circulation Mode Touch Button to switch the air circulation modes.

 During internal recirculation, the A/C system circulates the air in the vehicle to achieve rapid cooling or heating, and prevent any dirty air from outside the vehicle from entering the vehicle.

 During external circulation, the A/C system circulates the air from inside and outside the vehicle to ensure a constant supply of fresh air from the outside.

 During automatic circulation, the A/C system automatically adjusts internal or external circulation according to the actual situation.

Note: Continuous internal circulation may cause the windscreen to mist. If this happens, switch on the defrost/demist function.

Intelligent Settings

The maximum heating/cooling function of the A/C can be set to ON automatically when the temperature is too low or too high.

Temperature Control

Touch the driver/passenger temperature selection icon to adjust the temperature of the air supplied by the vents.

Synchronous Temperature Zone Control

When touching the Sync Control Touch Button, the button illuminates, the drivers and passengers zone temperatures can be adjusted synchronously by the driver. When the touch button extinguishes, the individual drivers and passenger zone temperatures can be adjusted separately.

Front Face Vent Adjustment

The driver and the passenger are able to adjust the front face vent on the corresponding side.

The passenger face vent is automatically opened or closed depending on whether the passenger seat is occupied.

The front face vent adjustment includes the following five functions:

Press the "Free" touch button; the vent mode is automatically selected for the front face vent.

Press the "Off" touch button to open or close the front face vent.

Press the "Sweep" touch button; the front face vent enters the sweep mode.

Press the "Wind 1" and "Wind 2" touch button; the front face vent enters a predefined mode.

Swipe the front face vent airflow icon on the corresponding side left or right to adjust the direction of the front face vent.

Air Distribution Mode

To "Windscreen", directs air to the windscreen and front window side vents;

To "Face", directs air to the face vents;

To "Footwell", directs air to the footwell vents;

Note: When manually selecting multiple ventilation modes, three modes can be selected for use; in the automatic temperature control mode, the A/C system will automatically assign the ventilation mode, and the ventilation mode on the A/C interface will be grayed out.

Blower Speed Control

Touch the blower speed control icon to adjust the A/C blower speed and air volume.

Front Windscreen Defrost/Demist

Press the Defrost/Demist Button, the Cooling/Heating On/Off button will illuminate, and the system will enable the Defrost/Demist function to clear the mist or frost on the windscreen and front windows.

Pressing the Defrost/Demist Button again will exit the defrost/demist function, and the system will return to the previous state.

In the defrost/demist mode, operation of air distribution mode will exit the defrost/demist mode.

Rear Screen Heating

Warning: The heating element of the rear window is a sensitive component, and can be easily damaged when used improperly. DO NOT scrape or scratch the inside of the glass. DO NOT stick labels over the heating elements.

Press the heated rear window button to the heated rear window on or off. It is on when the button indicator illuminates and off when the button indicator goes out. After the heated rear window function is turned on, it will automatically switch off after running for a certain period of time.

Description of Shortcut Operations

1. Swipe up or down with two fingers on any interface of the central screen to adjust the temperature.

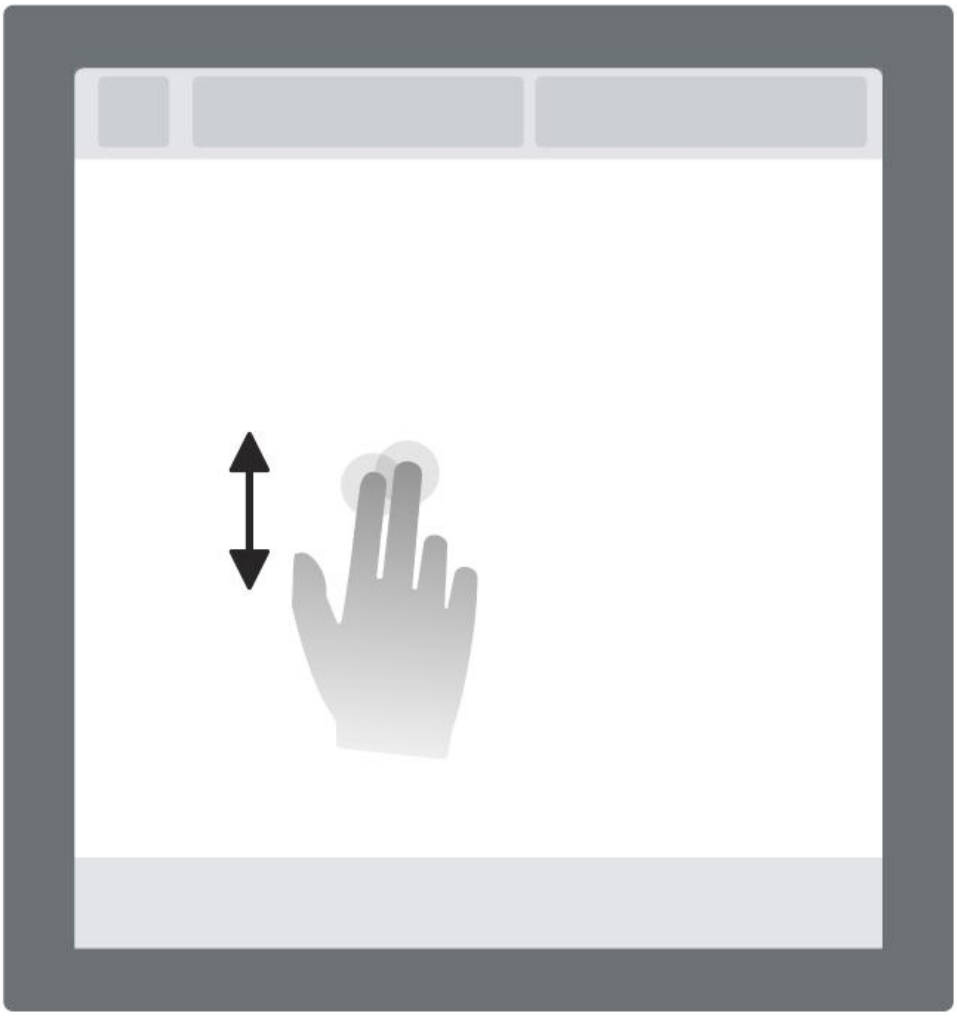

Note: The shortcut operation is only for the driver vents.

2. Swipe left or right with two fingers on any interface of the central screen to adjust the blower speed.

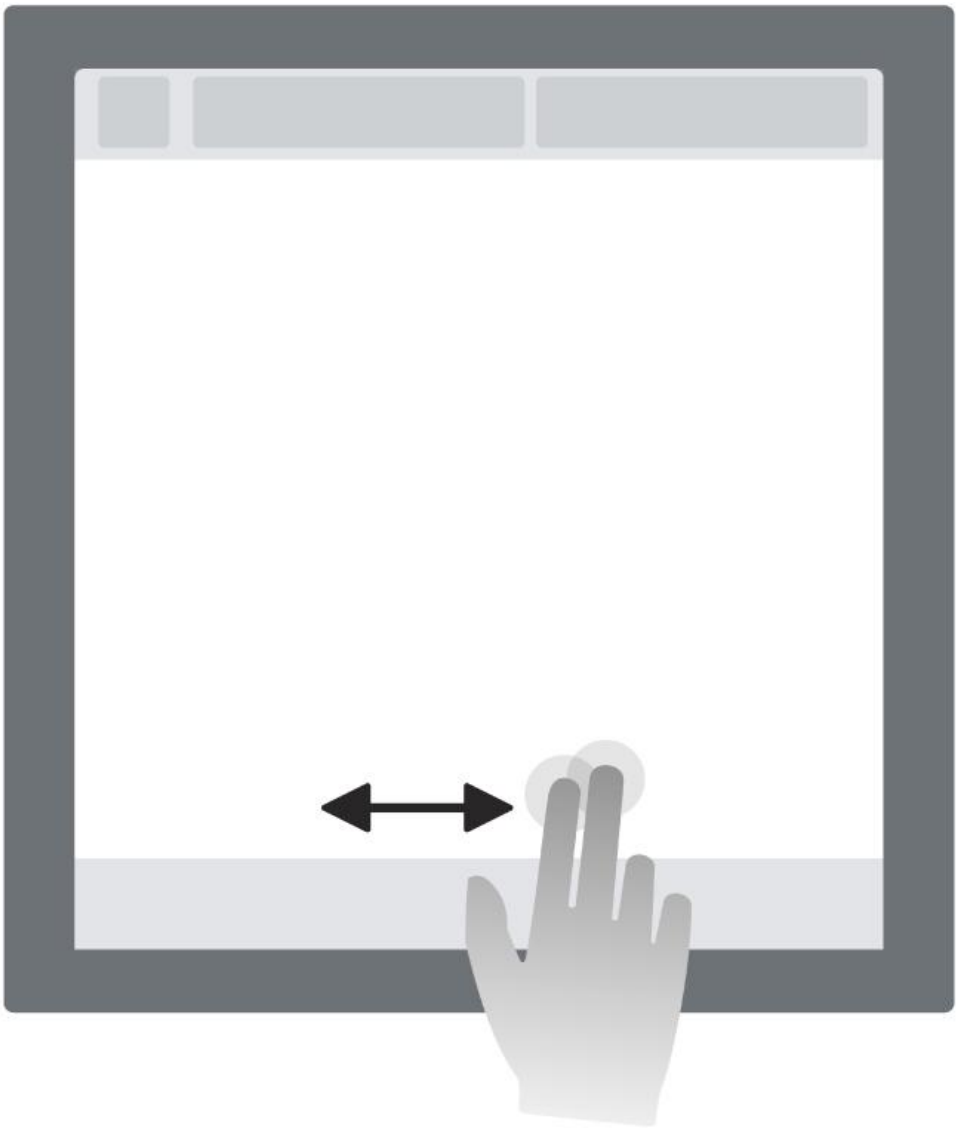

Note: The shortcut operation is only for the driver vents.

Map

Map Display

Users can open the map navigation through "Central Screen - App List - NaVi". The map will be displayed on the main driver's entertainment screen once opened.

Users can zoom in and out of the map with two fingers to see more information.

Note: In the map, the current display position will be returned if the user does not perform any operations for a period of time.

Map Search

The vehicle supports destination search via text or voice.

Users can bookmark addresses in favorites and set home and company locations on a map.

When navigating, users can search for any location and set it as a passing point or destination.

Map Navigation

Users can search for routes by entering destinations manually or by voice control. In the route selection page, you can select the route and calculate the route preference.

After entering the route selection page, a countdown will automatically be triggered. If there are no subsequent operations, the navigation will automatically launch after a period of time.

Note: Users can long press any location on the map to select a destination and quickly initiate navigation.

During navigation, the trip card will show the following information: next maneuvre point, remaining time, remaining mileage, and expected remaining power at arrival. Users can exit the navigation by manually clicking or by voice control.

Music

Control Page

In the "Music" APP on the central screen, you can click the Radio and Bluetooth/USB to switch between different types of audios.

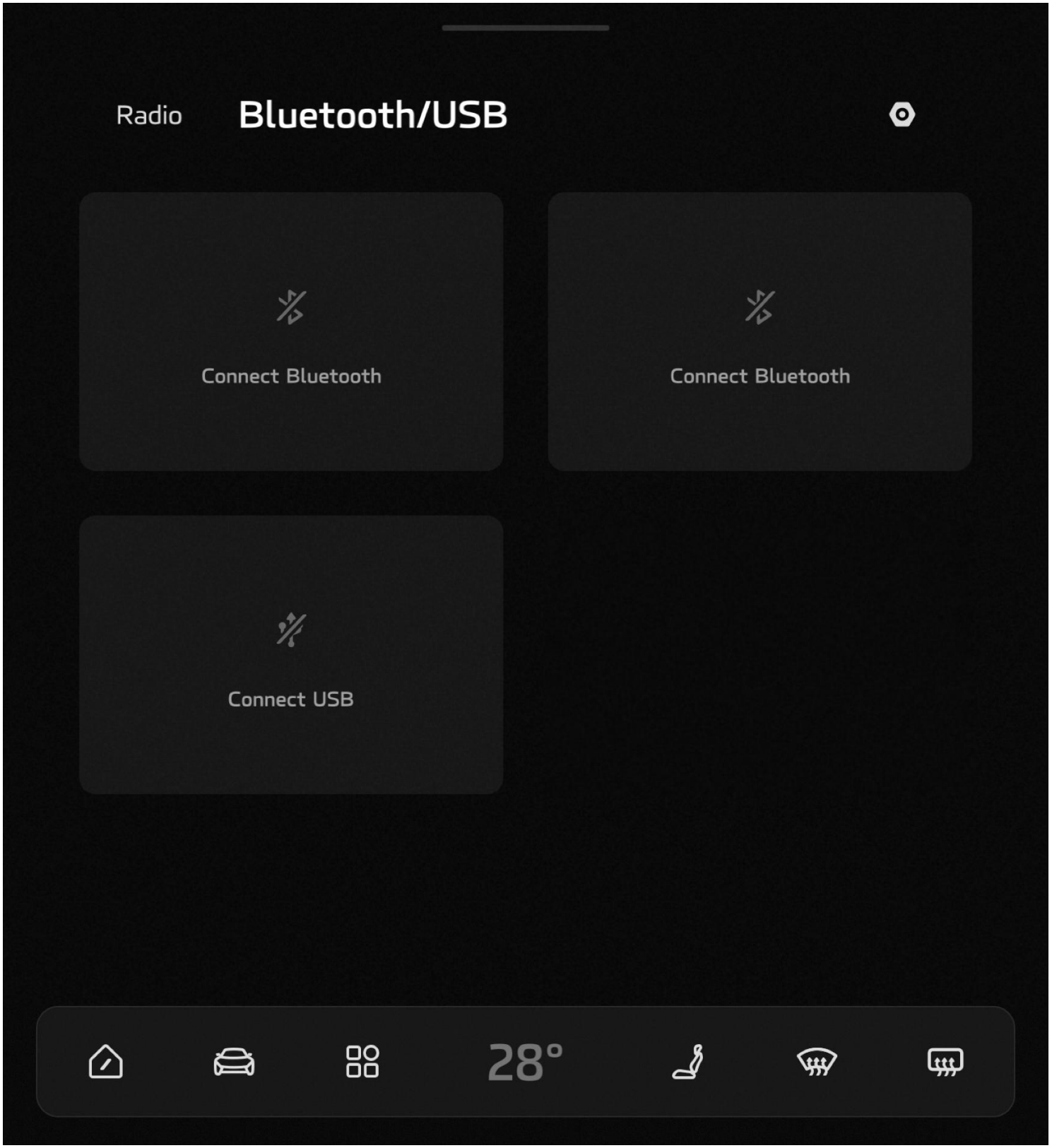

With radio selected, users can choose different radio channels to listen to different programs.

Bluetooth/USB Music

Bluetooth/USB Music includes: Bluetooth music and USB music; Bluetooth music allows music to be played from a suitable mobile phone by setting up the vehicle to mobile phone Bluetooth connection, with up to two Bluetooth mobile phones supported at the same time; USB music is able to play music files stored on a USB by inserting a suitable USB.

When you click the "Please Connect Bluetooth" button, the Bluetooth Connection page will pop up automatically. After successful connection, the mobile phone's name will be displayed, and you can select and play the music from the mobile phone; when two Bluetooth mobile phones are connected, you can switch between the play sources by clicking the different Bluetooth device icons.

After you insert the USB, the USB icon will display the name corresponding to the USB, and directly play the music stored on the USB; you can click the USB icon to enter and view the folders and select desired songs.

You can control the music through the left roller of the steering wheel. Dial up or down to increase or decrease volume, press down to pause play, and swipe left or right to toggle music that is playing.

Playing Operation of Music Player

The music player is available in two display modes: small card and large card. The user has the ability to switch between both cards.

1. When the user clicks the small card, the small card will change into large card.

2. The user can pull down the large card to return to the small card.

3. General operation buttons of player: Play/Pause, Previous/Next.

Note:The Music player is separate from the Amazon and Spotify players.

Phone

Bluetooth Settings

The user can connect mobile devices (such as mobile phones, bluetooth headset) with the vehicle through the interior Bluetooth, and can choose to synchronize mobile phone data (such as contacts, call history) to the vehicle on the central screen, in order to better experience the on-board phone function.

Open "Settings > Link > Bluetooth" on the central screen, and search for nearby available devices; locate the target device and click Connect.

Note: For Bluetooth devices paired for the first time, please check whether the pairing code on the mobile phone is consistent with the head unit, and then click "Pair".

Each vehicle can pair with 2 Bluetooth mobile phones and 1 bluetooth headset. The user can view the Bluetooth connection in the driver entertainment screen.

The user can pair and connect a bluetooth headset in the Connection Settings page of the central screen. After successful connection, any music and video available via the passenger screen can be played through the bluetooth headset.

Bluetooth Phone

1. After the mobile phone Bluetooth is successfully paired and connected with the vehicle Bluetooth, open the "APP List > Phone" on the central screen; Upon authorisation by the user, the contacts, call history and other data will be synchronized to the vehicle. You can make a call by tapping a contact, call history, or entering a number on the dial.

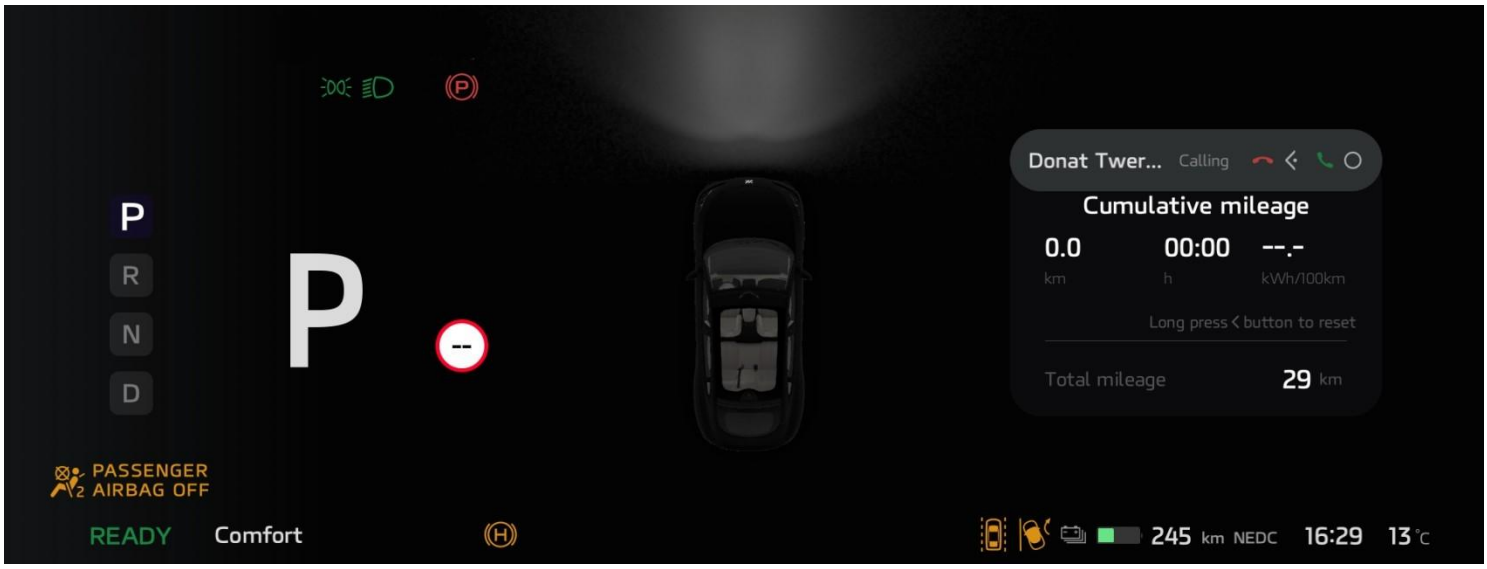

2. When a phone card is displayed on the instrument pack, the user should follow the prompts on the card to dial left or press the right steering wheel switch to hang up or answer the call.

Wifi and Hot Spot Settings

Open "Settings > Link > Wireless Network" on the central screen; turn on the wireless network and search for nearby available devices; click the target device and enter passwords to connect.

Open "Settings > Link > Hot spot" on the central screen; turn on the hot spot.The user can set the name and password of the hotspot here.

eCall (Emergency Call)

If the vehicle has a serious accident or the owner is in an emergency situation, the vehicle can provide the user with eCall (emergency call) rescue service. This can be initiated by a long press of the SOS physical button on roof console, or by an automatic trigger after the airbag is deployed due to collision. After an eCall connection is established, the emergency call centre will obtain the current location of the vehicle and other information according to the uploaded vehicle data, and provide appropriate rescue services immediately.

System Update

Introduction

Your car is provided with remote system upgrade and update functions, on occasion we will push the updated version of the system software to your vehicle in order to provide your car with the latest functions.

Click "Settings > General" , you will see a small red dot in "General", which indicates an update is available.

Note: Before upgrading, ensure that the status of the vehicle meets the preparation conditions and follow the update prompts to complete the upgrade.

Operating Steps

1. Click the Vehicle icon on the central screen to open the Vehicle Settings interface.

2. In the shortcut menu, find the General interface.

3. Click "Update", the user can then select "Install Now" or "Reserve for Installation".

4. After the update, the user needs to leave the vehicle and lock it, and the system completes the self-test. Wait for a few minutes until the vehicle enters the sleep mode and then restart the vehicle, and the upgrade is over.

Note: Do not charge the vehicle during upgrading. Please arrange a reasonable and suitable time for the upgrade. If you leave the car during update, the update results will be received after you restart the car.

Precautions

The download process of system upgrade installation package is silent. When an update is available, the upgrade package will be downloaded automatically in the background once the vehicle is started and connected to a network. If the download is not finished when the vehicle is powered off, it will resume automatically after the vehicle is started and connected to a network next time. After the installation package is downloaded, when the vehicle is parked and engaged in P gear, there will be a prompt stating an update package is available to install. Then the user can enter the Installation interface to install the package, while maintaining a normal connection to the network.

Warning:

During system upgrade, the upgrade must not be interrupted and the vehicle cannot be started for driving. Ensure that the vehicle is in a safe area before upgrading.

Do not modify vehicle parts by yourself to avoid personal injury or property loss due to upgrade failure.

Safe Driving

Charging

Charging Requirements

Generally, slow charging is recommended for the vehicle; frequent use of fast charging should be avoided. If a charging station is not functioning, or shows signs of damage, do not use the station, report it to the vendor or supplier immediately.

Before charging

Prior to using any charging equipment please inspect the sockets, plugs and cables for any damage. DO NOT use any equipment that shows signs of misuse or damage.

It is recommended that the charging connector should be connected to the charging socket in the body before operating the charging device.

During charging

Starting the vehicle is not allowed during charging. Charging operation time will be affected by external temperature. For example: charging time will be extended at low temperatures.

Whilst charging the car on rainy days, where possible, please avoid connecting the charger during torrential rain or storms. If excessive water is evident around the charging plugs please use a suitable cloth do dry the area as best possible before removing the waterproof blanking plugs and connecting the charging cables.

There is a small possibility that sparks may be generated during the connection and disconnection of a charging device. Please ensure charging takes place away from flammable liquids and gases.

High voltage charging or discharging equipment can cause interference with electronic medical devices. When using medical electrical devices such as pacemakers, please consult your doctor about whether charging or discharging your electric vehicle will impact the operation of the device. In some instances, electromagnetic waves that are generated from the charger can seriously impact medical electric device operation.

After charging

After charging, turn off the charging device first, then disconnect the charging connector from the vehicle body, refit the charging port cap (if equipped) and the charging port door.

Charging Port

The charging ports configured in different countries and regions may vary.

Charging port type 1:

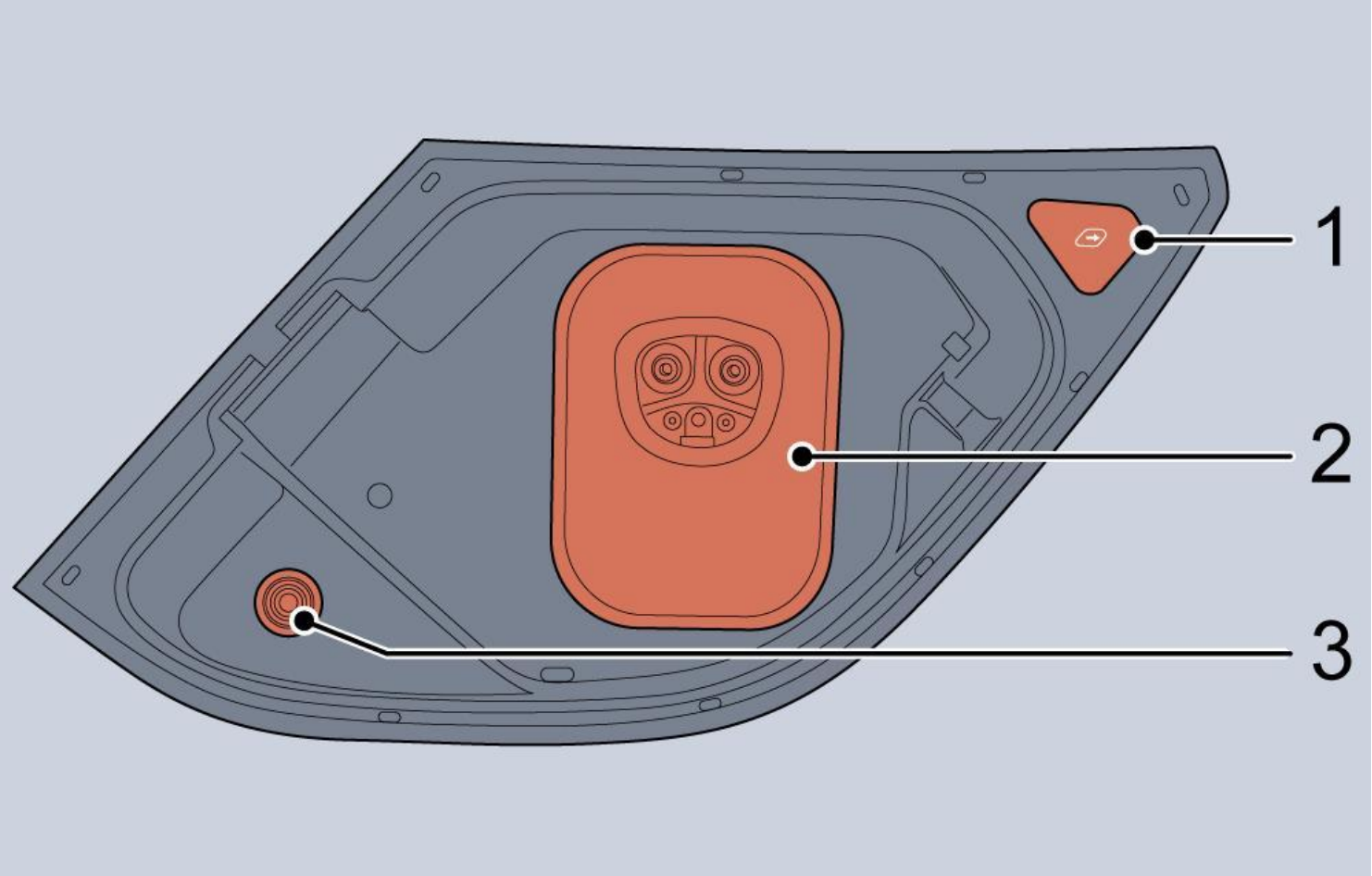

1. Charging port door switch

2. Slow&Fast charging port

3. Charging state indicator

- White - Welcome
- Blue - Charging cable connected
- Orange - Charging cable not connected.
- Green - Charging normal
- Red - Charging failure

Charging port type 2:

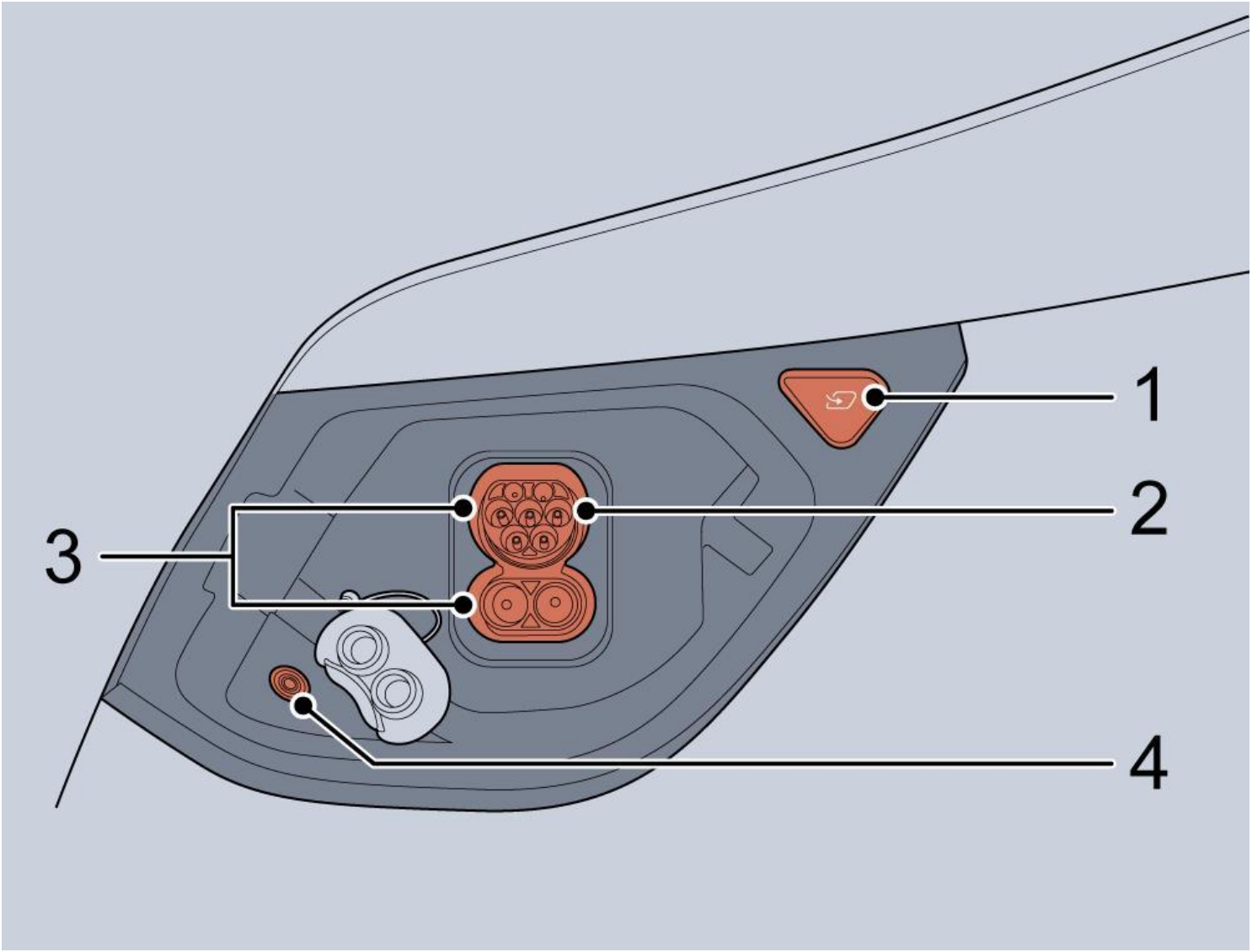

1. Charging port door switch

2. Slow charging port

3. Fast charging port

4. Charging state indicator

- White - Welcome
- Blue - Charging cable connected.
- Orange - Charging cable not connected.
- Green - Charging normal
- Red - Charging failure

Note: When the vehicle discharges externally, the indicator will be in a blue breathing state.

Precautions for AC or DC charging

After opening the charging port door, check the charging identifier symbol on the plug cover. Check the charging connector identifier symbol on the AC or DC charger cable. After checking that the alphabetic characters of the charging identifier symbols match, proceed the next charging step.

Note: Risk of failure, fire or injury etc. when using a charging connector with unmatched identifier symbols.

Electric charging identifier label symbol table

Supply Type	Configuration	Type of Accessory	Voltage range	Identifier
AC	7P	Vehicle connector and vehicle inlet	≤480V	
DC	7P+2P	Vehicle connector and vehicle inlet	50V–500V	
DC	7P+2P	Vehicle connector and vehicle inlet	≤1000V	

Open charging port door

The charging port door is on the rear left of the vehicle, and can be opened using any of the following methods:

1. When the vehicle is unlocked, if the user presses the upper right area of the charging port door (as shown in the figure below), the charging port door will automatically open;

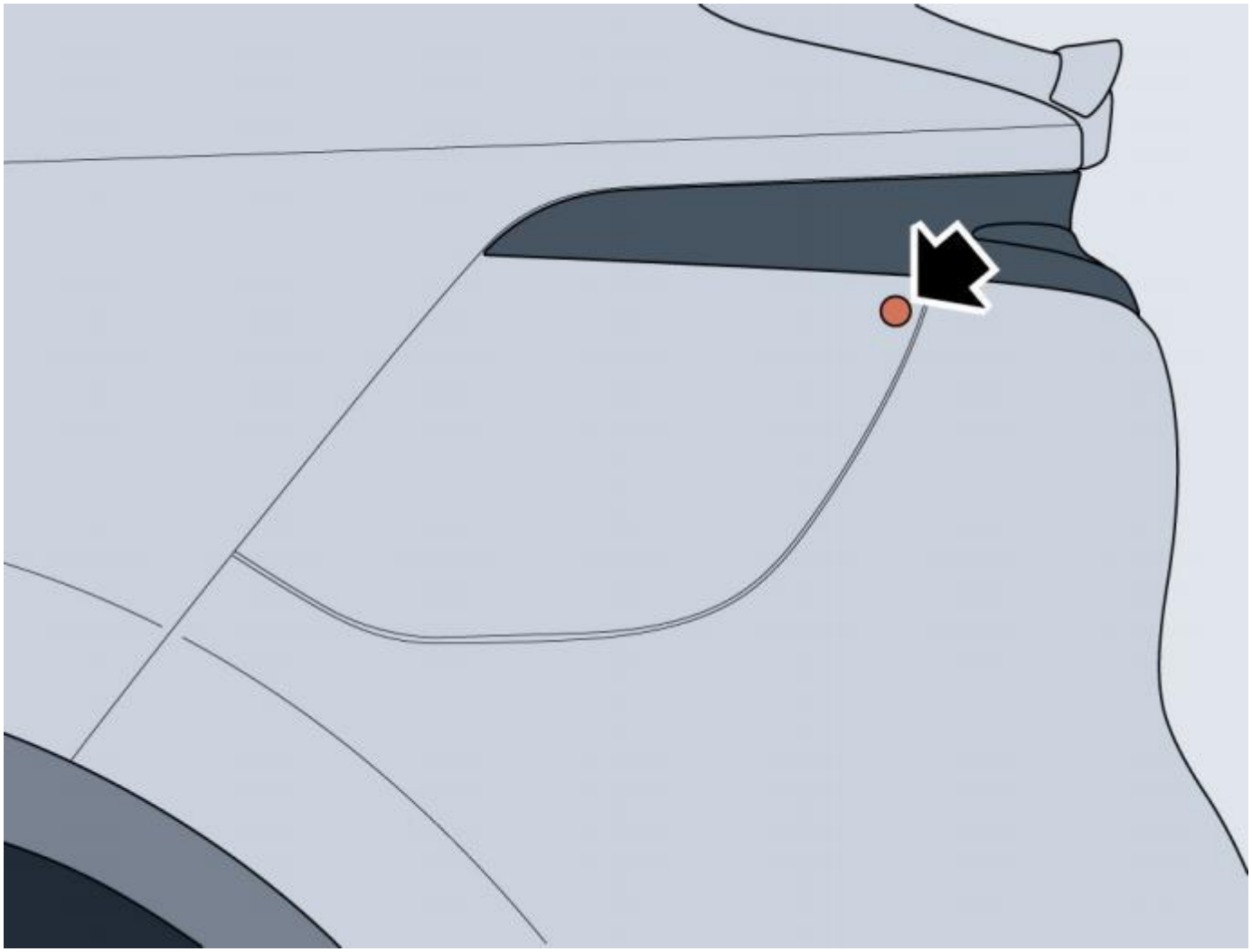

2. The charging port door can be opened by pressing the charge port door in the 3D image displayed on the central screen.

When the charging port door is open, the slow charging port and fast charging port are visible.

Note: If the charging port door is frozen and cannot open automatically, it will be necessary to manually break the ice or open the door after the ice melts. Do not attempt to open the door using force, this will cause damage.

Note: Do not wash with the charging port door open.

Note: When the battery is low or disconnected, do not frequently open and close the charging port door manually to avoid damaging the internal mechanism.

Note: Do not directly spray high pressure water onto the charge port or door.

Note: The vehicle charging port is provided with a waterproof cover. Please install the waterproof cover in place after the completion of charge.

Charging port door opening in emergency

With the vehicle unlocked, if the charging port door cannot be opened normally when it is pressed, you can open it by pulling emergency charge door opening cable. To gain access to the cable, remove the access port trim cover panel on the left side of the loadspace to expose the looped handle of charging port door release (pull ring - orange).

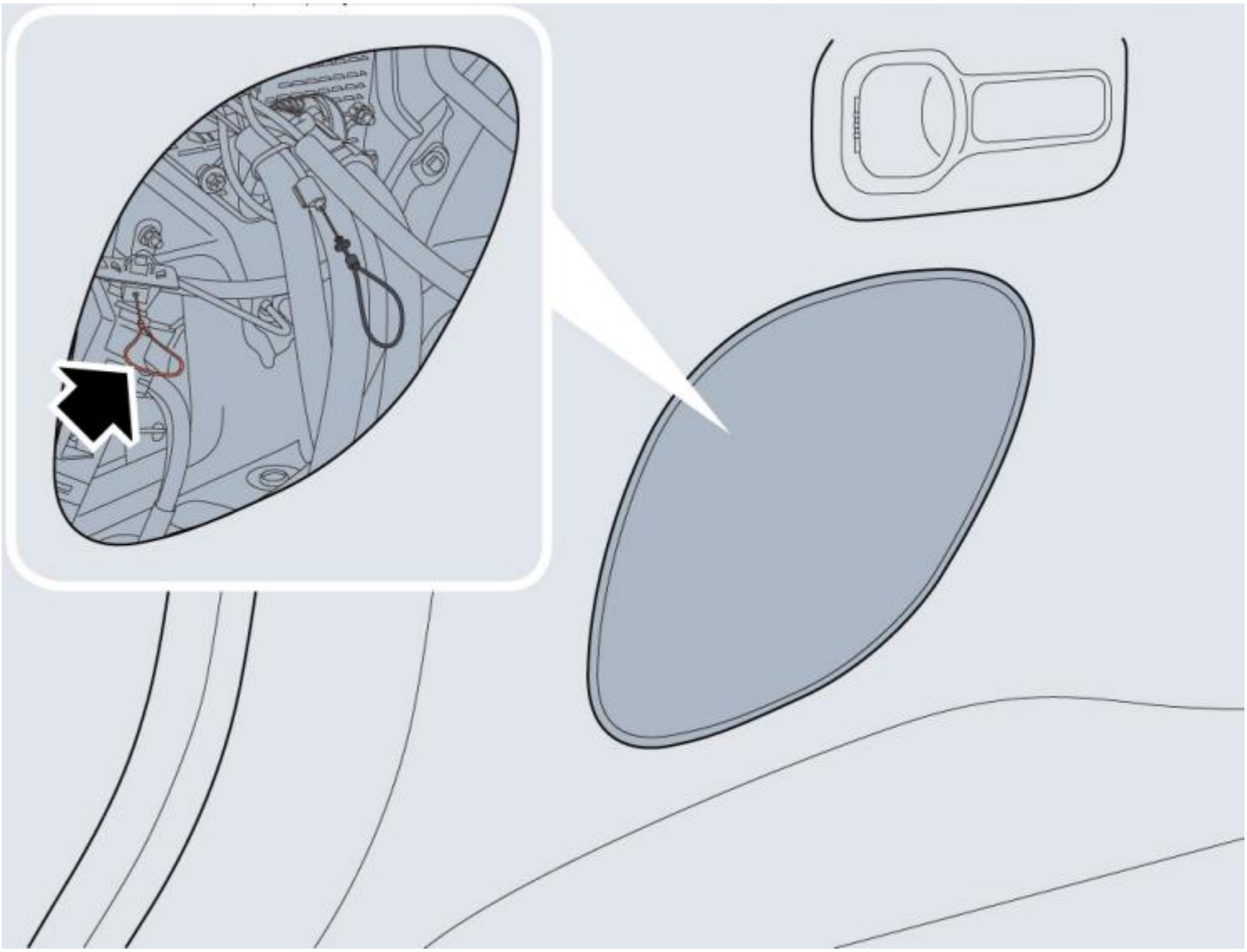

Close charging port door

After charging, the charging port door can be closed using one of the following methods:

1. After charging, pull out the AC charging gun, the charging port door will automatically close;

2. When the vehicle is placed in the READY state, and the charging gun is not connected, the charging port door will automatically close;

3. Press the charging port door switch, and the charging port door will close;

4. The charging port door can be closed when the charging port door on the 3D model of the vehicle on the central screen is operated.

Note: After the charging port door is opened, if the charging gun is not connected within 2 minutes, the charging port door will automatically close.

Note: The charging port door will return to the open state if it encounters an obstacle during closing.

Charging port electronic lock

The slow charging port features an electronic lock function. In order to prevent children from contacting the charging gun or accidentally pulling it out during charging, after plugging the charging gun in the slow charging port, the electronic lock in the slow charging port will automatically be activated to lock the charge gun in position when certain conditions are met. In this case, do not

attempt to remove the charge gun, forced removal of the charge gun will damage the vehicle. The vehicle must be unlocked before pulling out the charging gun.

Note: After the vehicle is unlocked for approximately 10 seconds, if the charging gun is still plugged into the slow charging port, the electronic lock will automatically reinstate and lock the charge gun again.

Charging port electronic lock opening in emergency

In any case, if the automatic unlock of charging port electronic lock fails, you can release the charge gun locking device by pulling the release cable. Remove the trim panel cover on the left of the loadspace to expose the release cable for the charging gun (pull ring - black).

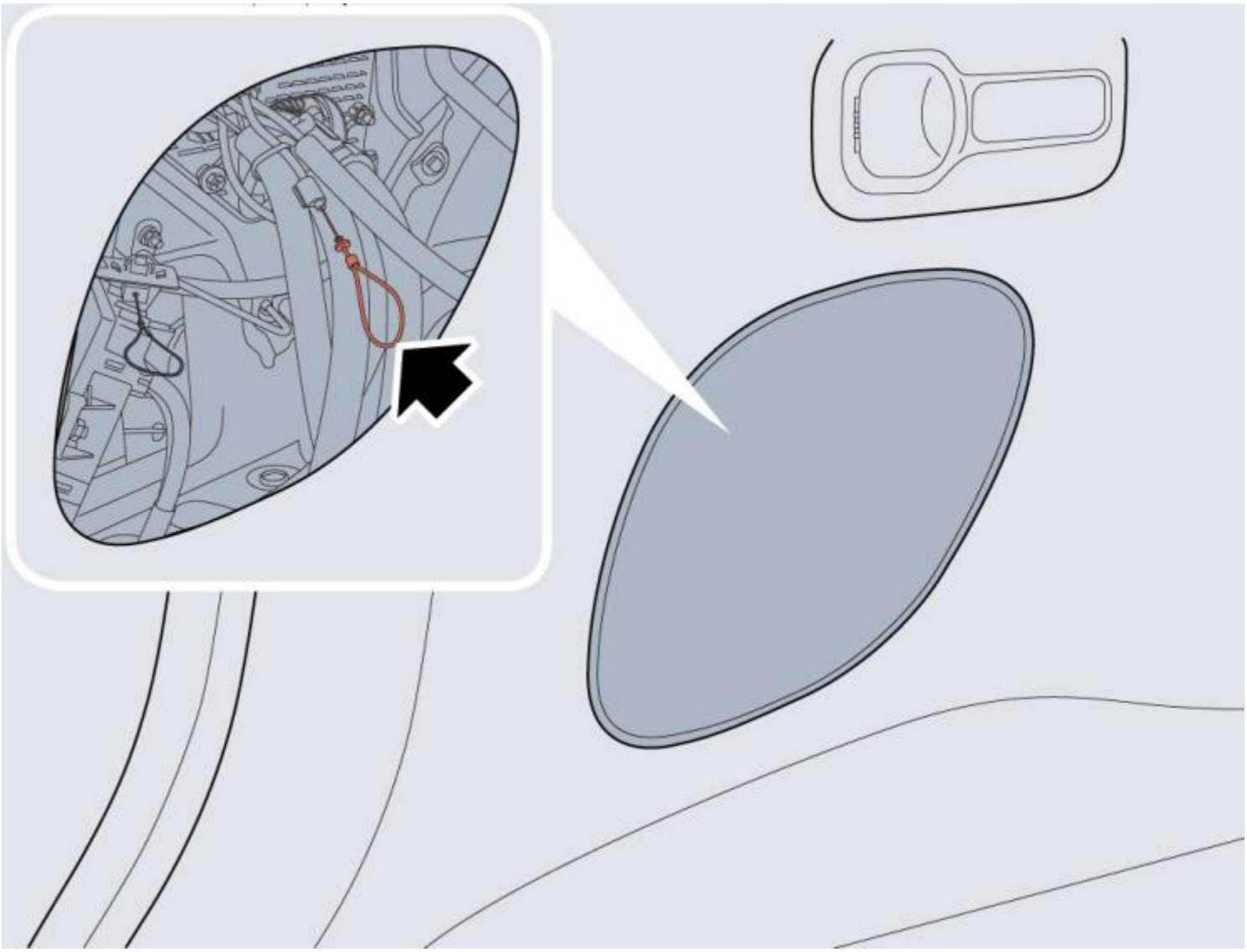

Charging Operations

Fast charging

Before using the fast charging device, please read the Operating Instructions of the device carefully. Different fast charging devices have different operating methods.

Note: Power off the vehicle, wait for 10 seconds and then access the fast charging plug.

Slow charging

Slow charging is a charging method that allows the high-voltage battery pack to reach the optimal equilibrium state. An AC charging device can be used to charge the vehicle slowly.

General charging operations

1. Turn off the power to the vehicle and close all doors

2. Open the charging port door and connect the charging gun to the vehicle

3. Use an APP or other payment method to activate the charge station.

4. Enter charging (If the charging port status indicator is green, it is in the charging state)

5. After entering the charging process, the electronic lock of the charging port will automatically lock the charge gun in position.

Stop charging operations

Slow Charging:

1. Unlock the vehicle and remove the charging gun to stop charging.

2. You can press the stop button on the charge station or operate the central screen in the vehicle to end the charging, then remove the charging gun.

Fast Charging:

You can press the stop button on the charge station or operate the center screen in the car to end the charging, then remove the charging gun.

Target charging capacity Settings:

Users can set a target charging capacity before or during charging.

1. Tap "My Car" on the central screen to find and enter the charging page;

2. Drag the small slider grid that displays range and charge level to set the charging capacity.

Scheduled charging

You can only set the reservation charging using the APP, please refer to the APP operation for details.

IMPORTANT

- In the interest of safety, the vehicle owner should only select AC charging devices that meet the vehicle and national standards for EV charging.

Charging Display

At the beginning of the charging process, the information will be displayed on the driver screen.

During charging, to view the charging state, you can activate the driver screen to check the current charging state.

Note: The information displayed on the driver screen may vary depending on vehicle type.

Charging Time

The charging time of the high-voltage battery pack is related to many factors, such as current electric quantity, charging mode, ambient temperature and charging device power.

Fast charging time

At room temperature, the time taken to charge to 80% (instrument pack capacity information) from alarm status (high-voltage battery pack low battery warning lamp alarms) is shown in the table below.

Fast charging method	DC charging station - 800V	DC charging station - 400V
From alarm status to 80%	20 minutes	30 minutes

- At low and extreme high temperatures, the charging time will be extended.
- If the charging device has an insufficient output capability, the charging time will be extended.

Note: Considering the safety and service life of the high-voltage battery pack, the battery pack may not be fully charged when a fast charging station is used, therefore, the battery level displayed on the instrument will be less than 100%. Please select a reasonable charging mode based on your vehicle usage plan.

Slow charging time

At room temperature, the time taken to charge to 100% (instrument pack capacity information) from alarm status (high-voltage battery pack low battery warning lamp alarms) is shown in the table below.

Slow charging method	**AC wired charging station - 11kW**	
	100kWh	**75kWh**
From alarm status to fully charged (100%)	Approximately 11.5 hours	Approximately 8.5 hours
From alarm status to fully charged (100%) and equalised	Approximately 13.5 hours	Approximately 10.5 hours
Complete equalisation charge before the first use of a long-time parked vehicle	Approximately 15.5 hours	Approximately 12.5 hours

Slow charging method	**AC wired charging station/device - 7kW**	
	100kWh	**75kWh**
From alarm status to fully charged (100%)	Approximately 16.5 hours	Approximately 12.5 hours
From alarm status to fully charged (100%) and equalised	Approximately 18.5 hours	Approximately 14.5 hours
Complete equalisation charge before the first use of a long-time parked vehicle	Approximately 20.5 hours	Approximately 16.5 hours

Slow charging method	AC wired charging device - 2.2kW	
	100kWh	**75kWh**
From alarm status to fully charged (100%)	Approximately 51 hours	Approximately 36 hours
From alarm status to fully charged (100%) and equalised	Approximately 52 hours	Approximately 37 hours
Complete equalisation charge before the first use of a long-time parked vehicle	Approximately 54 hours	Approximately 39 hours

- At low temperatures, the charging time will be extended.
- If an equalisation charge has not been conducted for a long time, the required charge time will be extended.
- An equalisation charge should be carried out before the first use of the vehicle after storage for long periods, and the charging time will be extended appropriately on the basis of the corresponding charging time taken to carry out a full equalisation charge.

Discharge

The vehicle is equipped with a discharge function, this can convert the high voltage DC power in the high-voltage battery pack into domestic AC power.

This discharge function can be realized by using a discharge gun.

Discharge operations

1. Open the charging port door.

2. Insert the discharge gun into the charging port (slow charging port also serves as the discharge port).

3. Enter "My Car" on the central screen, and click "Battery".

4. Click "Discharge", and enter Discharge Settings page.

5. Set the discharge cut-off capacity, and click "Discharge" to enable discharge operations.

6. Click "Stop" button in the discharge interface to stop the discharge, or stop the discharge after the power is discharged to the set cut-off value.

7. Remove the discharge gun, and close the charging port door.

Note: During the discharge, the charging port electronic lock will lock the discharge gun. Do not attempt to remove the discharge gun using force, this will cause damage.

Note: During the discharge, the user still can set the "discharge cut-off capacity".

Note: During the discharge, the vehicle cannot be put in READY mode.

Note: The discharge operations will reduce the driving range.

Note: The maximum discharge power of the vehicle is 6.6kW. Please do not use an electrical appliance with its power exceeding this limit.

Seat

Safe Sitting Position

Warning: To avoid personal injuries due to the loss of vehicle control, do not adjust the seats while the car is moving.

An ideal position of the seat should make sure your driving position is comfortable, which allows you to hold the steering wheel with your arms and legs slightly bent and control all the devices.

Do not recline the front seat backrest excessively. Optimum benefit is obtained from the seat belt with the backrest angle set to approximately 25° from the upright position (vertical).

To mitigate the danger possibly caused by airbag triggering, the driver and front passenger seats should be positioned as rearward as practical. Take care when adjusting the height of the front seat: the feet of the rear passenger could be trapped when the seat is lowered.

Seat Headrest

Warning: Do not hang anything on any head restraint or head restraint rod.

The head restraint is designed to prevent rearward movement of the head in the event of a collision or emergency braking, thereby reducing the risk of head and neck injuries.

Front Seat Head Restraint

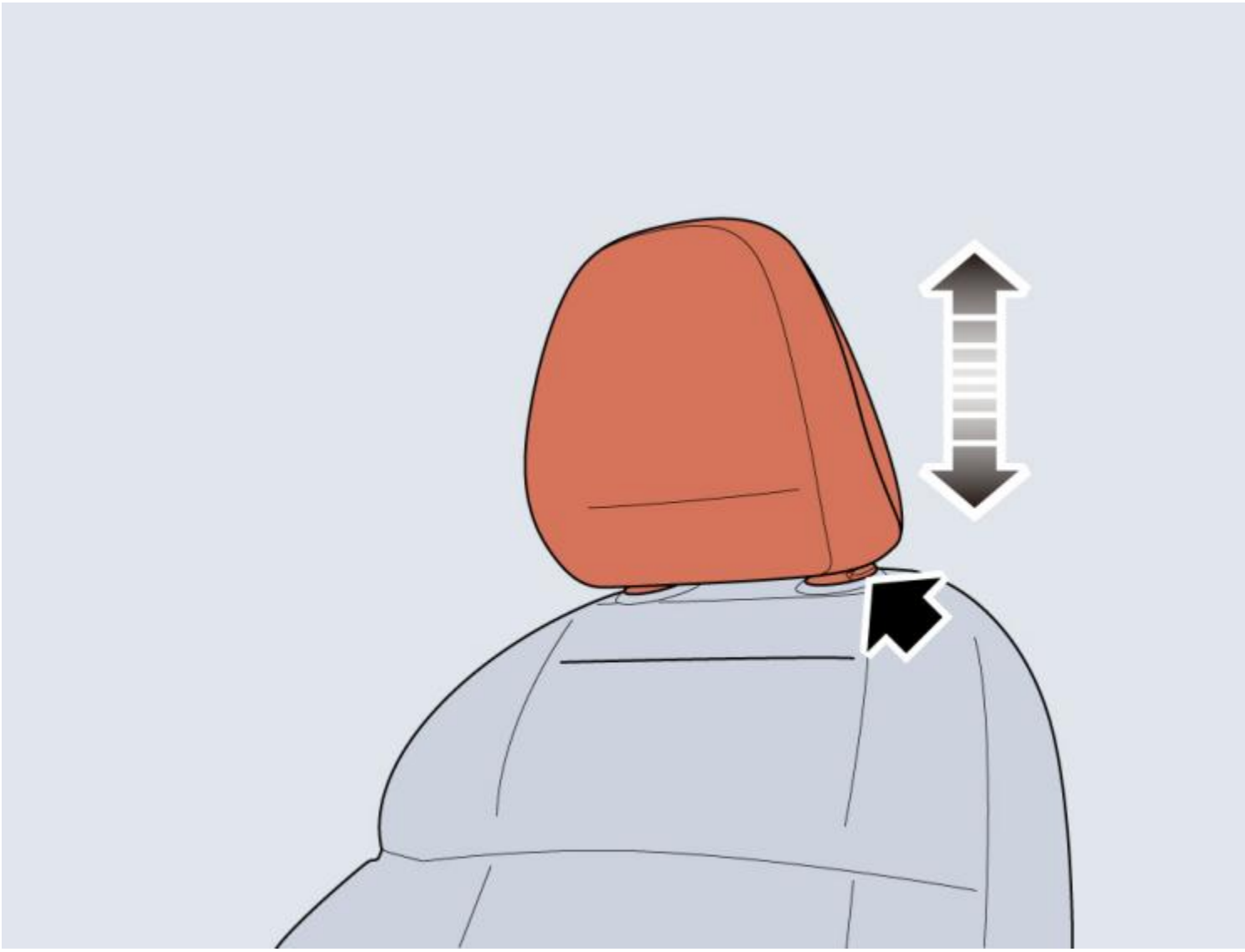

Front head restraint is a manually adjustable head restraint.

When adjusting a head restraint from low to high position, pull the head restraint directly upward, and gently press it downward after it reaches the desired height to make sure that it is locked in position. To remove the headrest, press and hold the guide sleeve button (as indicated by the arrow) on the side of the headrest, and then pull the headrest upward to remove it. When adjusting a headrest from the high to low position, press the guide sleeve button (as indicated by the arrow) on the side of the headrest, press the headrest downward; release the button after it reaches the desired height, and gently press the headrest downward to make sure that it is locked in position.

Rear Seat Head Restraint

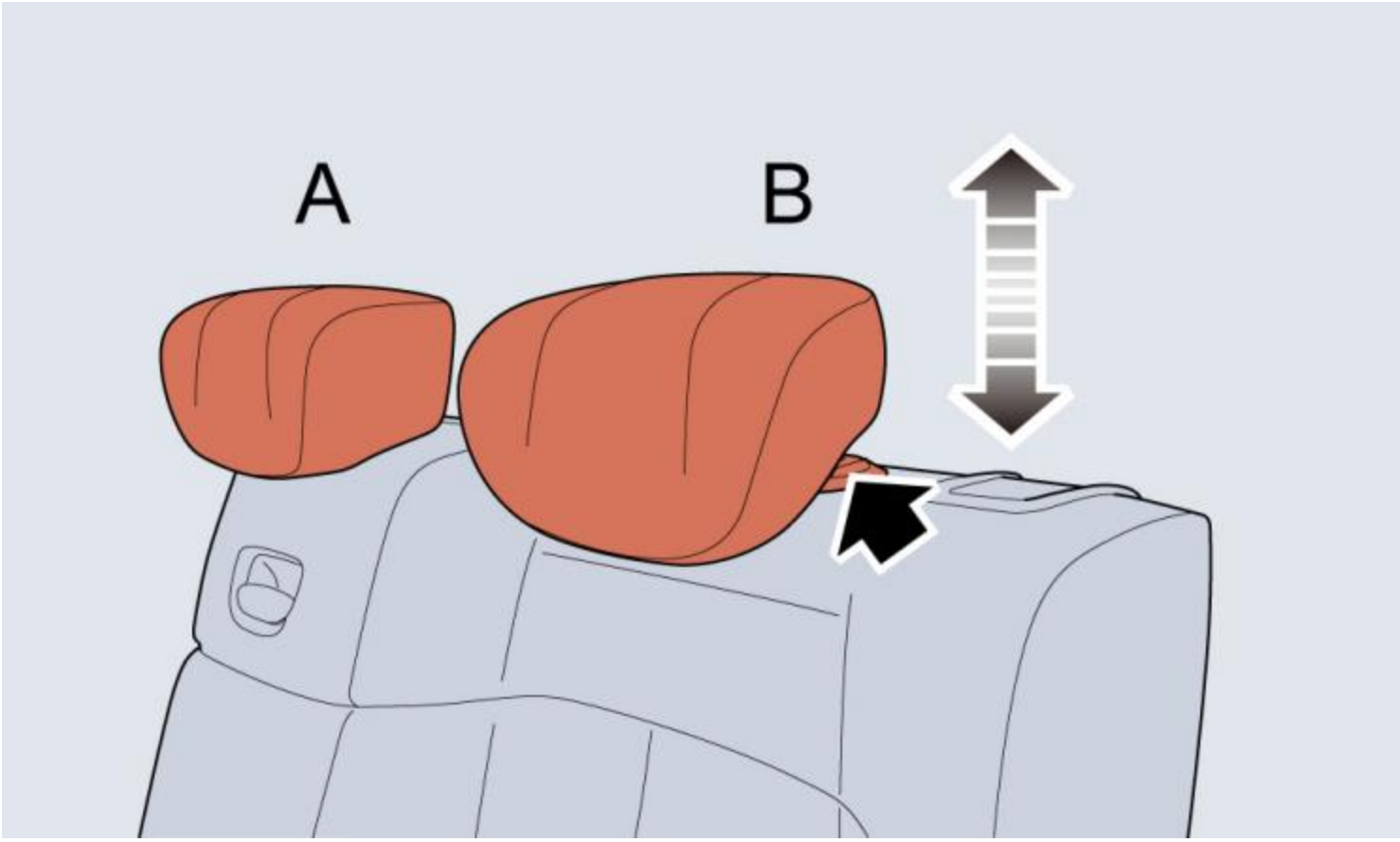

The rear seats of the entire vehicle family are provided with three head restraints.

The rear seat side head restraints are manually adjustable head restraints.

The rear middle head restraint (A) is fixed and cannot be adjusted or removed.

The rear side head restraints, (B), is manually adjusted up and down.

When adjusting a head restraint from low to high position, pull the head restraint directly upward, and gently press it downward after it reaches the desired height to make sure that it is locked in position. To remove the headrest, press and hold the guide sleeve button (as indicated by the arrow) on the side of the headrest, and then pull the headrest upward to remove it. When adjusting a headrest from high to low position, press the guide sleeve button (as indicated by the arrow) on the side of the headrest, press the headrest downward; release the button after it reaches the desired height, and gently press the headrest downward to make sure that it is locked in position.

Seat Adjustment and Relevant Functions

The user can adjust the front seat by operating the buttons on the exterior trim panel of the seat. The front seat can be also adjusted by operating the relevant interfaces on the central screen.

The heating and ventilation functions of the seat can only be enabled after the vehicle is powered on, and the heating and ventilation functions of the seat cannot be enabled at the same time.

Front Seat Adjustment

Warning: When adjusting the front seat, take care not to get your hands or feet caught in moving parts.

Example (Driver Seat):

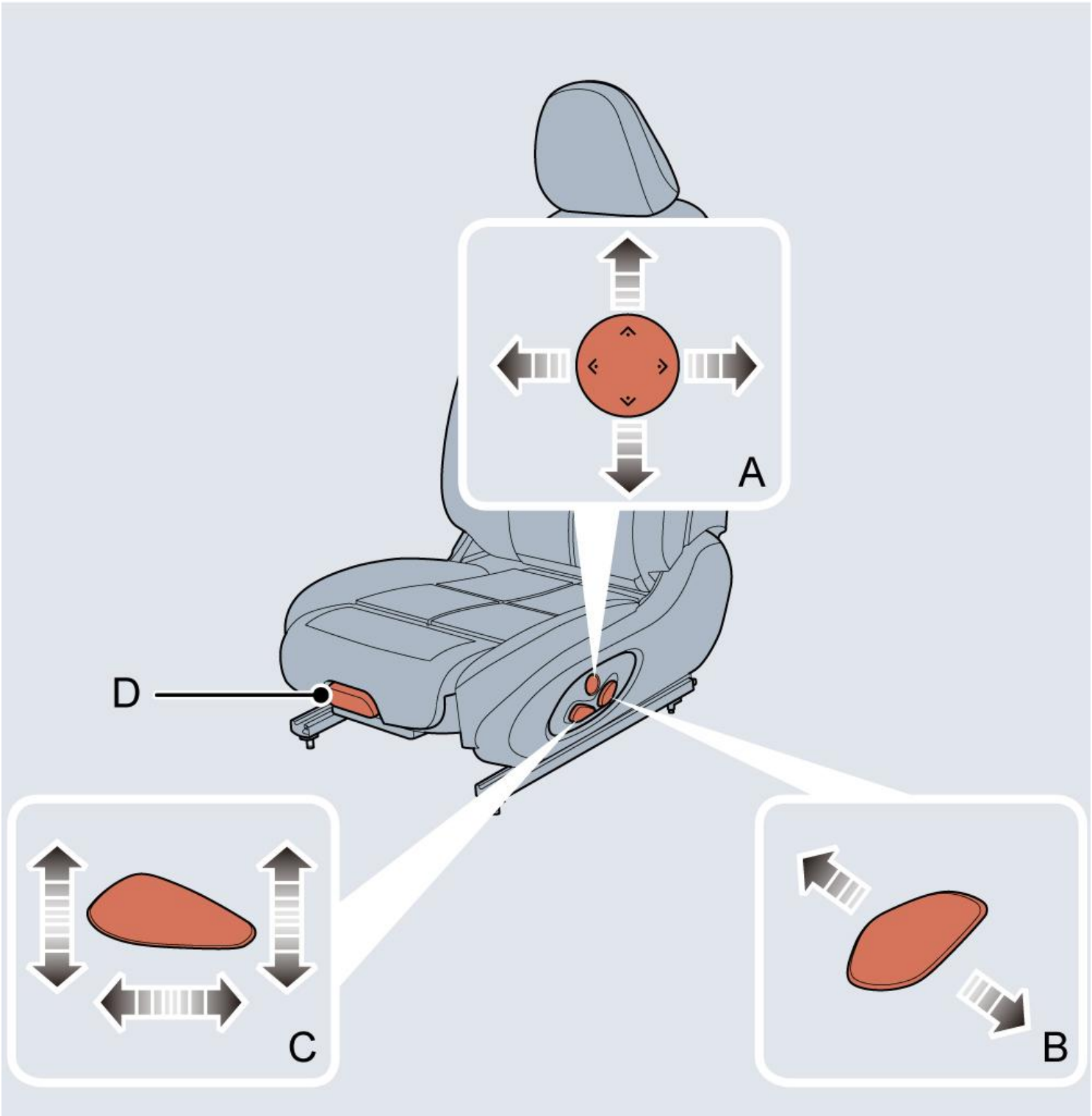

- Lumbar support adjustment

To adjust the lumbar long press the button in the required direction (A).

- Backrest angle adjustment

To adjust the seat backrest angle, push the button in the required direction (B).

- Forward/rearward adjustment

To adjust the forward/rearward position, push the button forwards or rearwards (C).

- Cushion angle adjustment*

To adjust the cushion angle, push the front of the button upward and downward (C).

- Seat height adjustment

To adjust the seat height, push the rear end of the button up or down (C).

- Seat leg rest adjustment

While pulling the unlocking handle (D) outward, push the leg rest inward or outward and release the handle after adjusting the thigh leg rest to the desired position.

Rear seat adjustment

Warning: When adjusting the rear seat, take care not to get your hands or feet caught in moving parts.

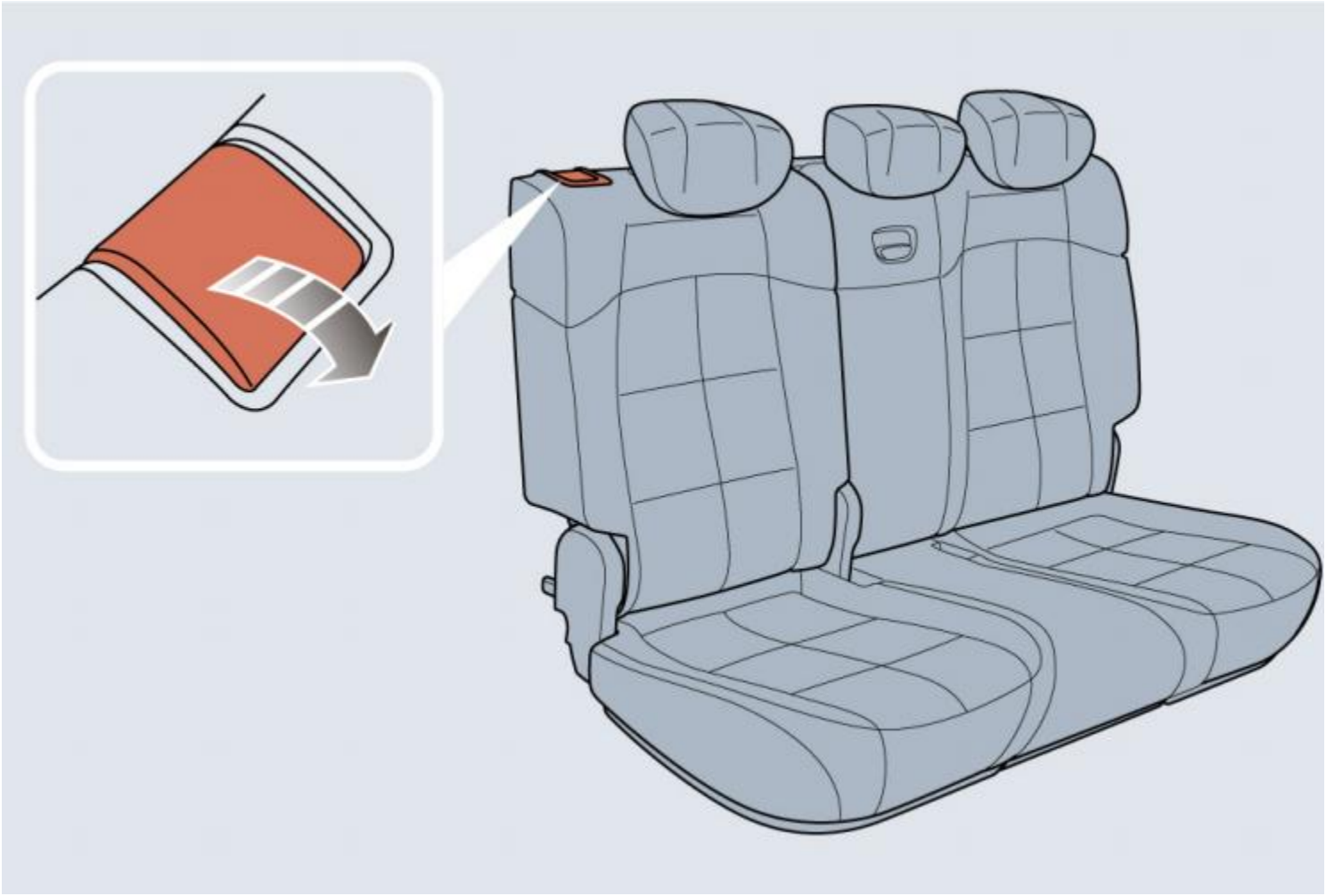

Folding of Rear Seats

The rear seat backrests can be fully folded forward to provide larger rear space. Before folding the backrest, please adjust the headrest to the lowest position. Pull up the control handle respectively on both sides to fold the seat backs forward. To unfold the backrest to the upright position, pull up the control handle on both sides to unfold the rear seat backs upward to the rearmost position until a "click" sound is heard, which indicates complete unfolding.

IMPORTANT: Before folding the rear seats, please ensure that the rear seats are not occupied or there are no items on the seat cushions.

IMPORTANT: When the driver seat backrest is inclined backward excessively, the folding of the rear seat backrest is very likely to damage the back of the front seat or the rear seat headrest.

IMPORTANT: When returning the rear seat backrest to the desired position, make sure that the rear seat belt is not trapped.

Seat Heating

Warning: If bare skin is in contact with the heated seats for excessive periods of time, it may cause low temperature burns.

Both the front and rear seats have seat heating.

The user can enable, disable or adjust the corresponding seat heating function on the central screen.

The heating function has a total of three levels of adjustable intensity.

Note: When the high level of seat heating intensity is used for a long time, the system will automatically reduce its level.

IMPORTANT

- Do not cover the heated seats with blankets, cushions or other insulation type objects or materials.
- If the seat is heated to the preset temperature but continues getting hotter, please turn off the switch and contact an After-sales Repairer for inspection and service.
- Overuse of the heated driver seat may cause drowsiness and could affect safe driving.

Front Seat Ventilation

The front seat backrest of the entire vehicle family has a ventilation function.

The user can enable, disable or adjust the corresponding seat ventilation function on the central screen.

The ventilation function has a total of three levels of adjustable intensity.

Personalized Setting of Seats with Memory Function

The drivers seat fitted in the entire vehicle family features a seat position memory function.

Note: Regular users of the drivers seat are able to personalize their requirements, which include the position of the exterior rearview mirror and seat depending on the driver's login account.

Setting and Application of Seat Memory Position

Warning: Do not activate or attempt to reset the seat memory position during driving, there is a risk of accident due to the unexpected movement of the seat.

The user can set 5 seat memory positions in the Driver Seat Adjustment interface on the central screen according to his/her own needs. Long press the corresponding position button to save the current memory position. To apply the saved seat position, click the button corresponding to the seat position.

IMPORTANT
When applying the seat memory position, please ensure there are no objects that could cause restriction in the path of seat movement, otherwise the seat surface may be damaged or the memory position may fail to be applied.

Driver Seat Welcome Function

The welcome function of the seat is designed to allow the seat to automatically move forward and backward, so as to facilitate easier entry and exit of the vehicle for the user.

This function is only available when the user enables the 'Driver convenience' function on the central screen.

1. Exiting the car: When the user parks the vehicle, selects P gear, releases the seat belt and opens the door, the seat will automatically slide back a preset distance to provide larger front space for the driver to get out of the car.

2. Entering the car: When the user unlocks the door, opens the door and sits in the seat, When the door is closed or the brake pedal is pressed, the seat will automatically move forward to its last memorized position.

Seat Belt

Instructions for Use of Seat Belts

Warning: It is important that all seat belts are worn correctly. Always check that all passengers are wearing seat belts. The following situations where seat belts are fastened improperly may cause serious injury or even death in the event of emergency braking or collision:

- **Occupying a seat where you are unable to wear seat belt properly.**
- **Using an alternative object to insert into seat belt buckle whilst not wearing seat belt during driving.**
- **Having an unfastened seat belt whilst driving.**

Warning: Airbags can not replace seat belts. Airbags can only provide extra support when triggered, and not all traffic accidents will trigger airbags. Whether airbags are triggered or not, wearing seat belts properly can reduce the risks of serious injury or death in accidents.

 This vehicle is equipped with seat belt warning lamps to remind you to fasten your seat belt and check that any other passengers have their seat belts fastened. Refer to "Warning Lights and Indicators" in "Instrument Pack" section for details.

When the vehicle is moving, seat belts must be fastened properly for all occupants. The seat belt must be fastened even for short-distance travel. Because:

1. You can never predict if you will be involved in a collision accident and how serious it may be.

2. In the event of a collision or emergency braking, the seat belts will automatically lock. When the seat belt is worn correctly, the strongest bones in your body will bear the impact force to reduce your speed together with the vehicle, so as to prevent the out-of-control movement which may cause serious injury to driver and passengers.

3. The force generated by a low-speed collision cannot be supported by arms and hands even in a minor traffic accident.

4. Experience has clearly demonstrated that correct wearing of seat belts is closely related to the effective protection of occupants in most collision accidents!

Protection Provided by Seat Belts

Warning: It is of equal importance for passengers in the rear seats to fasten their seat belts correctly. Otherwise, passengers with seat belts not correctly fastened will be thrown forward in accidents, and it will endanger themselves as well as the driver and other passengers.



When the vehicle is in motion, the traveling speed of the occupants is identical to that of the vehicle. In the event of a 'head on collision' or emergency braking, the vehicle may stop, but the occupants will carry on traveling until they come into contact with a stationary object. This object may be the steering wheel, dashboard, windscreen or something else. A correctly fastened seat belt will eliminate this risk of injury.

When the seat belt is worn correctly, it will lock automatically in collision accidents or emergency braking to reduce your speed together with the vehicle, so as to prevent the out-of-control movement which may cause serious injury to driver and passengers. Under the protection of a seat belt, you will have a longer distance and more time to stop moving, and the strongest bones in your body will bear the impact force. That is why it is important to fasten the seat belt correctly.

When a minor traffic accident occurs, trying to shore up your body with arms is very dangerous. Even a low speed collision will generate force that arms and hands can not support, therefore, seat belts must be worn correctly during driving

How to Wear Seat Belts Correctly

Warning: Incorrectly worn seat belts could cause injury or death in the event of an accident.

Warning: Seat belts are designed for one person. DO NOT share a seat belt.

Warning: DO NOT wrap a seat belt around when holding a baby or child in your arms.

Warning: Remove any heavy coats or clothing when wearing a seat belt, failure to do so can affect protection provided by the seat belt.

Warning: Seat belts should not be wrapped around hard or sharp objects such as pens, spectacles or keys to avoid additional injury to the users.

Warning: Do not drive when the seats are excessively reclined. Seat belts cannot function correctly when the seats are reclined excessively. If an accident occurs, an incorrectly positioned diagonal section of the seat belt could cause damage to the neck or other parts. An incorrectly positioned lap belt section may allow the body to move under the lap belt, causing the lap belt to apply force on abdomen, which may cause serious or fatal injuries.

The seat belts fitted to your vehicle are designed for use by normal sized adults. This part of the literature refers to adult use. For advice on seat belt use with children, please see "How Children Use Seat Belts".

In order to maintain effective protection, the passengers must sit in the correct orientation, placing feet on the floor in front of them, with an upright body against the backrest (no excessive recline) and the seat belt correctly fastened.

IMPORTANT

- Always ensure the seat belt will not become trapped in the door aperture when closing the door, otherwise damage will occur.
- Pulling the seat belt out too quickly may cause it to lock. In this case, allow the seat belt to retract slightly, it will then unlock, and then pull it across your body slowly.
- If it is difficult to pull the seat belt out, it may be due to twisted webbing out of sight in the side trim panel. If this is the case, pull the metal tab to fully extract the seat belt, remove the twist, and allow the seat belt to retract slowly.
- Even if the seat belt is not completely smoothed, it must still be worn whilst traveling, but the twisted part of the seat belt should not contact the seat occupant. When this happens, please contact an After-sales Repairer for repair.

Correct Routing of the Seat Belts

Warning: Ensure the seat belt is correctly positioned on the body, never cross the neck or abdomen, and never pass the seat belt behind the back or under the arms.

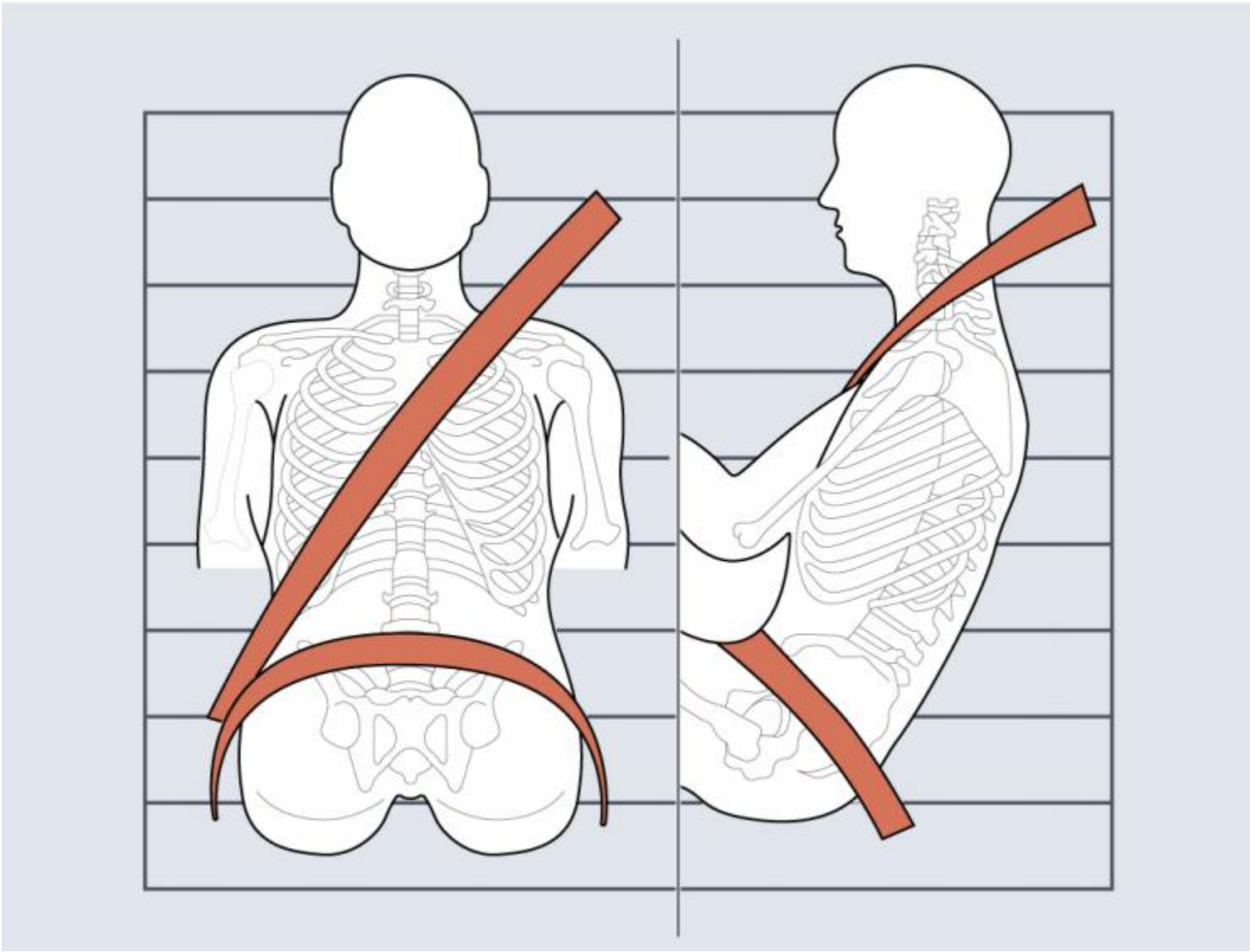

When wearing seat belts, the lap belt section should be positioned as low as possible across your hips and just in contact with your thighs (never cross the abdomen), so that in a collision accident, the lap belt can apply force to the firm hips, reduce the possibility of the body moving under the lap belt, and maximize the protection for passengers against injury.

The diagonal section of the belt should cross the middle of the shoulder and the chest. In the event of emergency braking or collision, the diagonal section of the belt will be locked. Never cross your neck, arms, or cross under your arms or behind your back.

To ensure that the seat belts always provide maximum protection, ensure the belt is flat, not loose and contacts the body properly. Adjust seat belt to ensure it is not loose.

Seat Belt Use during Pregnancy

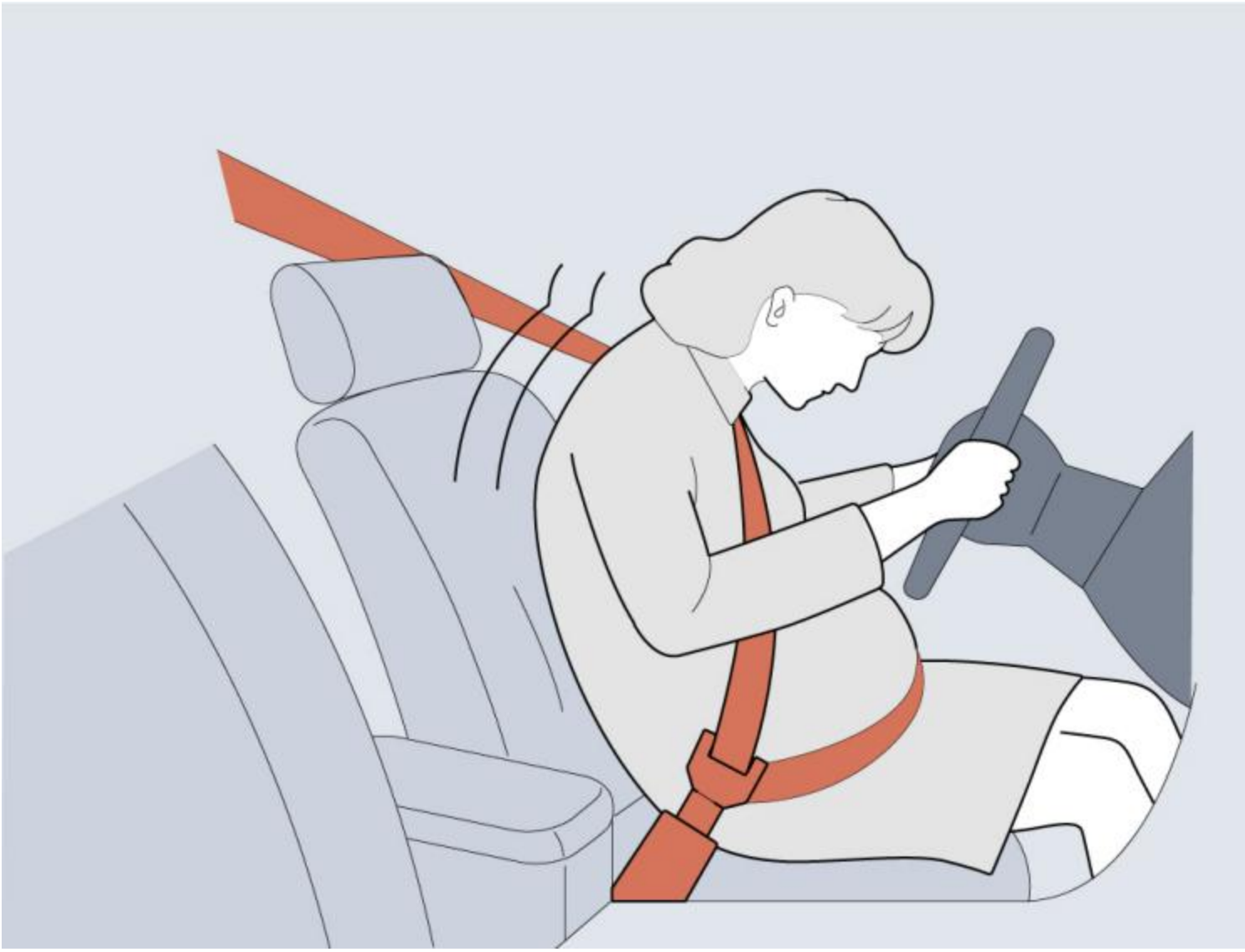

Wearing correctly positioned seat belts will provide protection for both mother and unborn child in the event of a collision or emergency braking. Like all passengers, a pregnant woman may suffer from more serious injury in collision accidents or sudden stop if she does not wear the seat belt correctly.

During the whole pregnancy, a pregnant woman must wear the lap-shoulder seat belt correctly. The diagonal section of the seat belt should pass across the chest as normal. The lap section of the belt should be as low as possible across below the belly, and snug on the hip bones. The seat belt must be flat so as not to cause pressure on the lower body of the pregnant woman.

Please consult your physician for further details.

Seat Belt Use for Disabilities

People with disabilities must also wear seat belts correctly.

Please consult your physician for further details.

It is a legal requirement that all occupants wear seat belts, this include people with disabilities.

Lap-shoulder Belts

All seat belts fitted on this vehicle are lap-shoulder belts. Please follow the instructions below to fasten lap-shoulder seat belts correctly.

1. Hold the metal tab, pull the seat belt out steadily over the shoulder and across your chest. Ensure there are no twists in the belt.

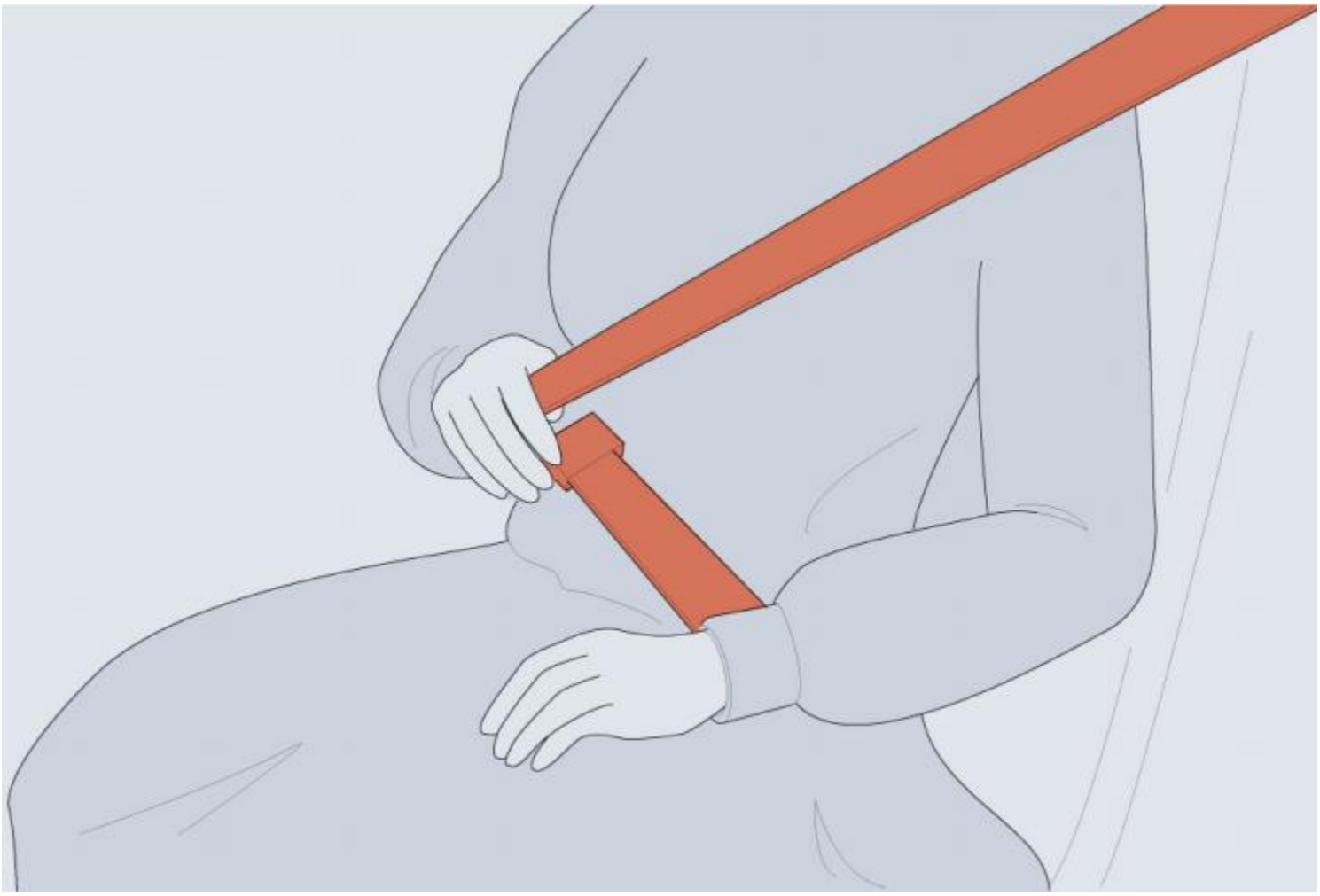

2. Insert the metal tab into the buckle until you hear a "click", this indicates the seat belt is securely locked.

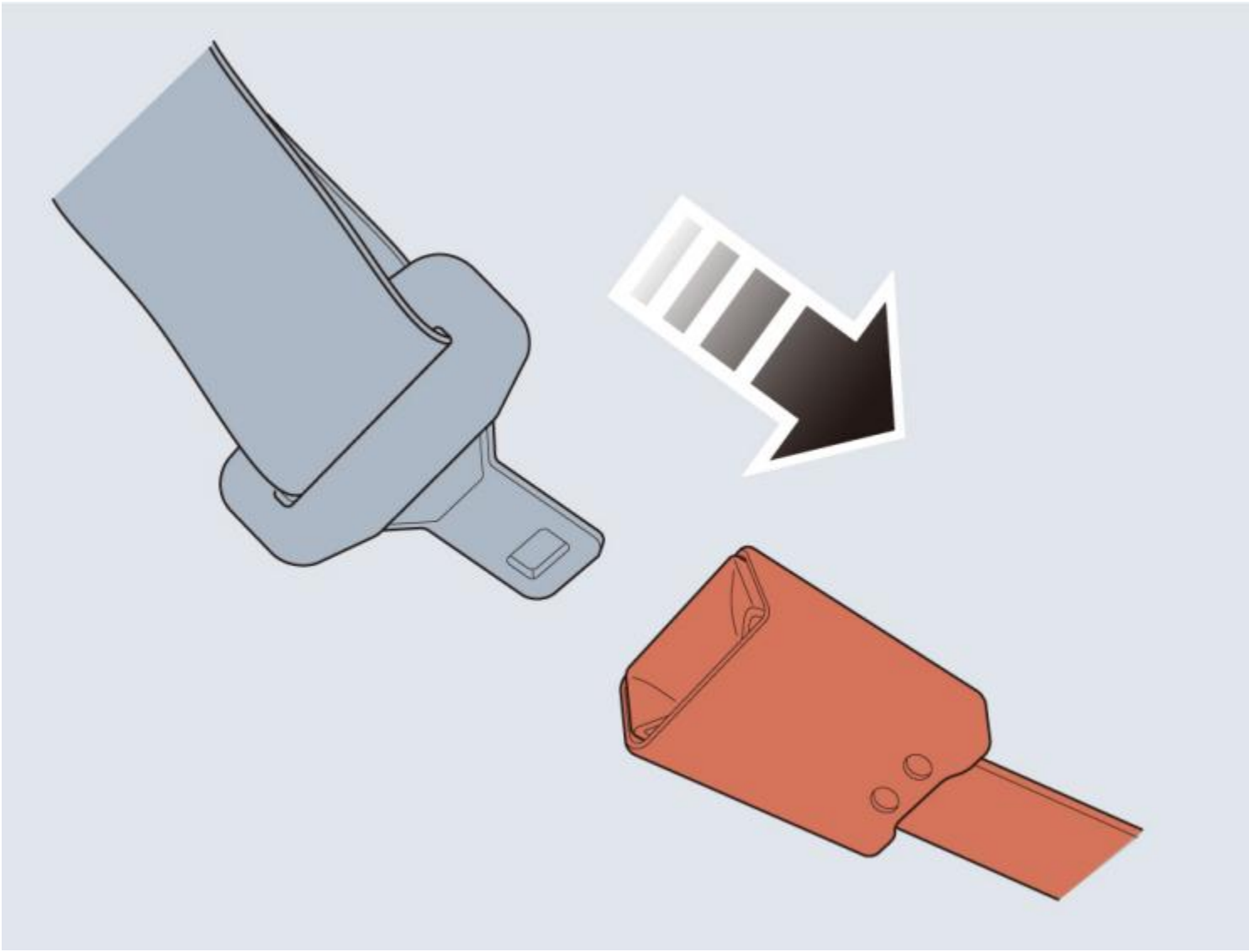

3. Pull the shoulder belt upward and tighten up the lap belt.

4. To release the seat belt, press the red button on the buckle, and the metal tab of the seat belt will automatically pop out. When the seat belt is released, the seat belt will automatically retract to its original position.

Seat Belt Height Adjustment

Warning: DO NOT adjust the seat belt height whilst driving.

Warning: Make sure the seat belt upper anchor point has been adjusted to the correct height and locked in place, injury or death may be caused by incorrect adjustment in the event of a collision.

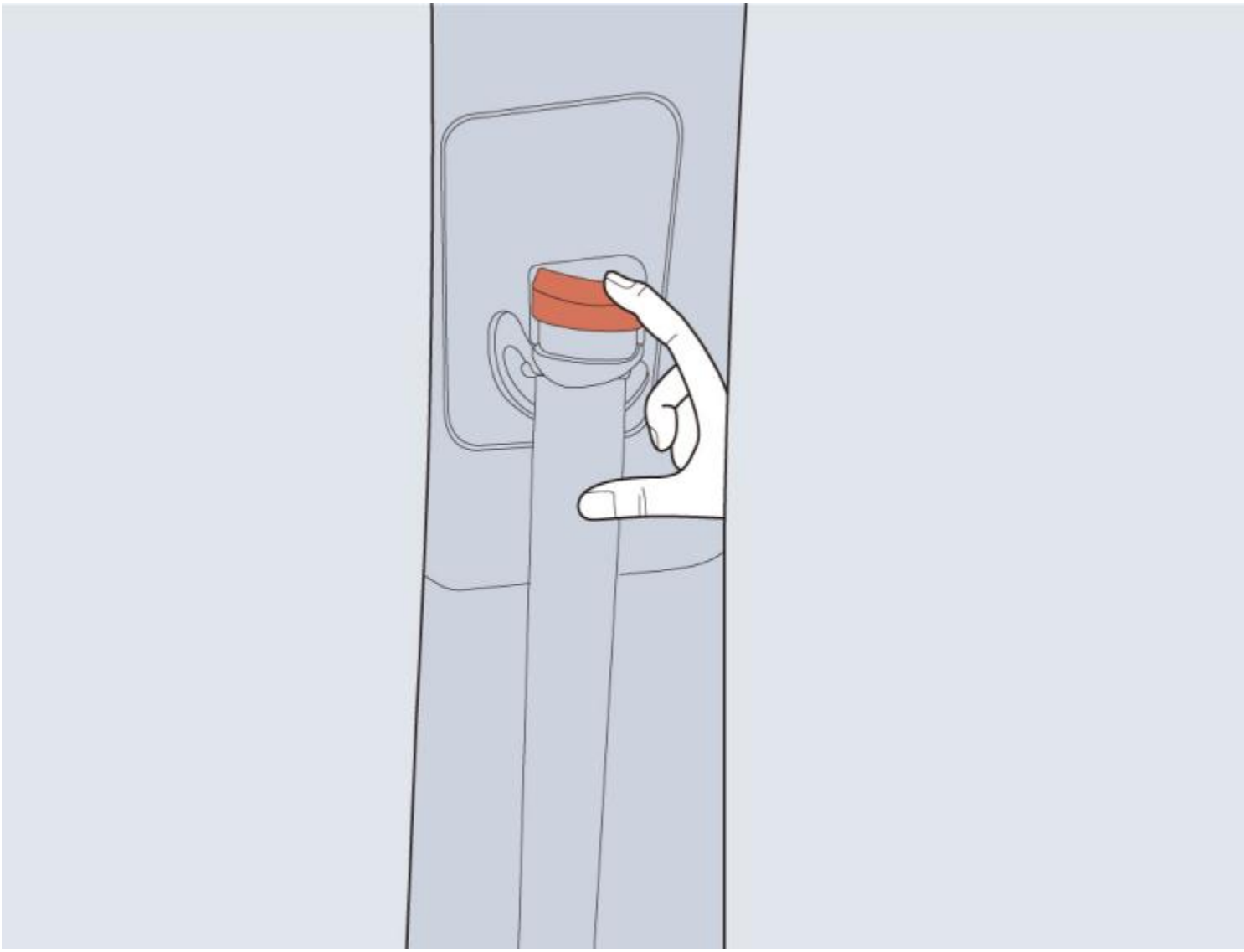

The trim panel beside the front seat of the vehicle is equipped with a seat belt upper anchor point adjuster to adjust the height of the shoulder belt, so that the shoulder belt can be correctly positioned on an occupants shoulder. The shoulder belt should be positioned away from the neck and head, however, it must not be positioned below the shoulder.

Please follow the instructions below to adjust the seat belt upper anchor point correctly:

1. Hold the seat belt.

2. Press the release button and move the height adjuster to desired position. Move the adjuster by pushing the slider.

3. After moving the adjuster to desired position, release the button and try to move the adjuster downward to determine whether it is locked in place.

Note: Incorrect positioning will reduce the efficiency of the seat belt in the event of a collision or emergency braking.

Children and Seat Belts

Warning: Proper protection measures must be taken for children during driving.

For safety reasons, children must ride in a suitable child restraint device fixed to the rear seat.

Infants

Warning: Only recommended child restraints suitable for the age, height and weight of the child should be used.

Warning: Never carry a child or infant with your arms whilst traveling. When collision accidents occur, the weight of child will produce such a great force that you can not hold the child. The child will be thrown forward and suffer serious injury or even death.

The seat belts fitted to your vehicle are designed for adults. They are not suitable for children. In the event of an accident or collision, the children are not secure. It could cause death or serious injury.

Infants MUST use a suitable child restraint device. Please consult the child seat manufacturer's guidelines when selecting the correct seat. Follow the manufacturer's instructions on installation. Please refer to 'Child Restraints' in this chapter for more details.

Elder Children

Warning: NEVER share a seat belt amongst children. In the event of an accident or collision, the children are not secure. It could cause death or serious injury.



As children grow and become older/larger it will get to the stage when they no longer require child seat restraints. At this point they will require use of the vehicle standard seat belt. Please ensure the seat belt is correctly positioned on the body of the child.

When fastening a seat belt for a child always check it for correct positioning. Adjust the height of the seat belt to ensure the shoulder belt is kept away from the child's face and neck. Position the lap belt across the hips as low as possible, and tighten adequately. Correct positioning means that the seat belts can pass the applied force to the strongest part of the child's body in accidents.

If the shoulder belt is too close to the child's face or neck, it may be necessary to use a child booster cushion (always ensure that it meets any relevant laws or standards).

Seat Belt Pre-tensioners

Warning: The seat belt pre-tensioners will only be activated once and then MUST BE REPLACED. Failure to replace the pre-tensioners will reduce the efficiency of the vehicle's restraint system.

Warning: ***If the pre-tensioners have been activated, the seat belts will still function as restraints, and must be worn so that the vehicle remains in a drivable condition. The seat belt pre-tensioners should be replaced at the earliest opportunity by an Authorised Repairer.***

The vehicle is fitted with seat belt pre-tensioners. These are designed to retract the seat belts and work in conjunction with the airbags in the event of a severe collision. When medium or severe frontal collision occurs and meets the condition to activate the pre-tensioner, it will help to secure the seat belt to reduce passengers moving forward.

The airbag warning lamp on the instrument pack will alert the driver to any malfunction of the seat belt pre-tensioners (see 'Warning Lamps and Indicators' in the 'Brief Introduction to Vehicle Functions' chapter).

The seat belt pre-tensioners can only be activated once. After activation in a collision, they must be replaced. This may also involve replacement of other SRS components. Please refer to 'Replacement of SRS Components' in 'Airbags' of this section.

IMPORTANT

- Seat belt pre-tensioners will not be activated by minor impacts.
- The removal or replacement of a pre-tensioner must be carried out by the technicians trained by the manufacturer.
- After 10 years from initial registration, (or replacement of seat belt pre-tensioner) of the vehicle, it is recommended that the seat belt pre-tensioners and any related components be replaced in order to maintain the original safety standards. If you have any doubts about this, or any other SRS device within this period, we recommend you consult an After-sales Repairer.

Seat Belt Checks, Maintenance and Replacement

Seat Belt Checks

Warning: Split, worn or frayed seat belts may not function correctly in the event of a collision. They may be damaged during a collision. If the seat belt is split or worn, have it replaced immediately.

Warning: Ensure the red release button of seat belt buckle is always pointing upward or outward, so that seat belts can be unfastened rapidly in emergency.

Please follow the instructions below to check the seat belt warning light, seat belt, metal tab, buckle, retractor and fixing device regularly:

1. Insert the seat belt metal tab into the corresponding buckle and pull seat belt webbing close to the buckle quickly to check that the belt clasp locks.

2. Hold the metal tab and pull the seat belt forward quickly to check that the seat belt reel locks automatically, preventing the webbing from extending.

3. Fully extract the seat belt and visibly examine for twists, fraying, splits or worn areas.

4. Allow a fully extended seat belt to retract slowly to ensure continual and complete smooth operation.

5. Visibly examine the seat belt for missing or broken components or components that may affect the normal operation.

6. Ensure the seat belt warning light system is fully functional.

7. If the seat belt fails any of the above tests or inspections, contact an After-sales Repairer immediately for repairs.

Seat Belt Maintenance

Warning: Seat belt repairs and removal should only be carried out by an Authorised Repairer. The repair of a seat belt component must be carried out by the manufacturer trained, dealer technicians. In the event of accidents, improper maintenance may cause seat belt pre-tensioners not to be activated normally to increase accident injury risk. For a better guarantee of your safety, we recommend you to consult an Authorised Repairer.

Warning: Ensure no foreign or sharp objects become lodged in the seat belt mechanisms. Do not allow liquids or foreign objects to enter the seat belt buckle, since this could affect the proper engagement between the seat belt metal tab and buckle.

Seat belts should only be cleaned with warm soapy water. Do not use any solvent to clean the seat belt. Do not attempt to bleach or dye the seat belt, otherwise it may be weakened. After cleaning, wipe with a cloth and allow to dry.

Do not allow the seat belt to fully retract before it is completely dry. Keep seat belts clean and dry.

If there are contaminants accumulated in the retractor, the retraction of seat belt will be slow. Please use a clean and dry cloth to remove any contaminants.

Seat Belt Replacement

Warning: Collision accidents may damage the seat belt system. The seat belt system may not be able to protect users after damage, which may result in serious injury or even death. After an accident, seat belts should be checked and replaced as needed immediately.

Seat belts may not require change after minor collisions. However, some other parts of the seat belt system, such as the metal tab, buckle, retractor, etc., may be deformed or damaged in the collision. Please contact an After-sales Repairer for repair or replacement of seat belt components.

Airbag

Airbag Overview

Warning: The airbag provides additional protection in a severe impact only. It does not replace the need, or requirement to wear a seat belt. Even when the vehicle is equipped with airbags, seat belts must still be worn correctly, failure to do so may result in severe injury or even death in a collision.

Warning: The airbags together with lap-shoulder seat belts provide optimum protection for adults, but it is not the case for infants. The seat belt and airbag systems in the vehicle are not designed for protecting infants. The protection required by infants should be provided by child restraints.

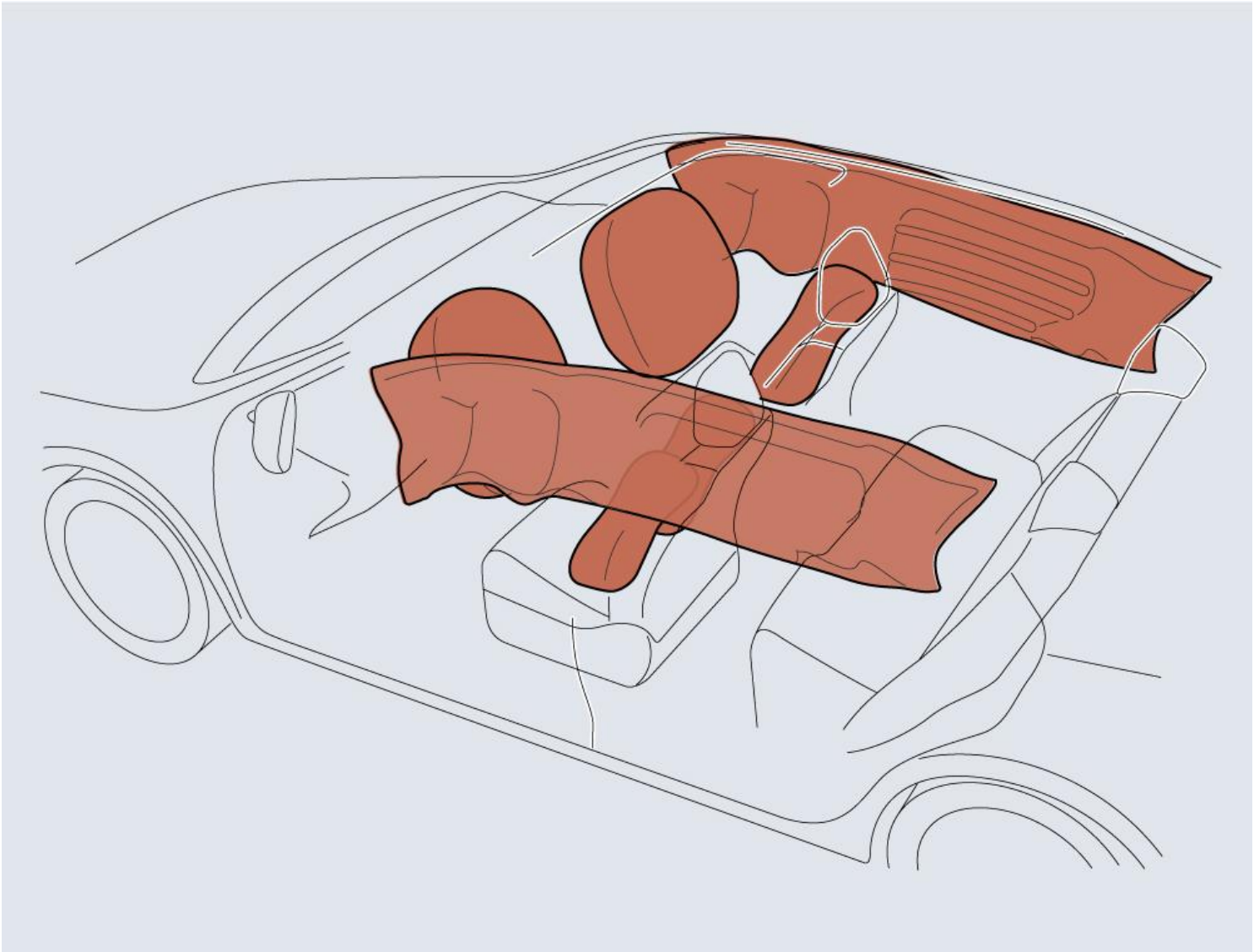

The airbag system featured on the entire family of vehicles consists of:

- Two front airbags (fitted in the centre part of the steering wheel and the instrument panel above the glove box respectively)
- Two side airbags (fitted in the outer seatback cushion of the two front seats)
- Two side curtain airbags (fitted in the roof interior trim on both sides)
- One centre airbag (fitted in the inner seatback cushion of the driver seat)

In the corresponding place where airbags are fitted, there is a warning sign stating "AIRBAG".

Airbag Deployment

Warning: An incorrect seated position, sitting on or leaning against the positions close to airbag may lead to severe or even fatal personal injury when the airbag is deployed.

Warning: To minimise the risk of accidental injury from inflating airbags, seat belts should be worn correctly at all times. In addition, both driver and front passenger should adjust their seat to provide sufficient distance from the frontal airbags, so as to avoid severe or even fatal injury when the airbag is deployed. If side airbags and side head impact protection airbags are fitted, both driver and front seat passenger should be seated to maintain sufficient distance from the upper part of the body to the sides of the vehicle, this will ensure maximum protection when the side airbags/side head impact protection airbags are deployed.

Warning: When airbags are deployed, children without proper protection may suffer from serious injury or even death. Do not carry children in the arms or on the knees during travelling. Children must wear seat belts suitable to age. DO NOT lean any part of the body out of the window.

Warning: An inflating airbag can cause facial abrasions and other injuries if the occupant is too close to the airbag at the time of its deployment.

Warning: The inflation passage of the airbag must be free of any obstructions. Do not place any objects between passengers and airbags. NEVER fix or place any objects on the steering wheel cover, or near the front airbag cover of the instrument panel. DO NOT affix or place any objects on, or adjacent to the airbags. If there is an object between the passenger and airbag, the airbag may not inflate properly, or the airbag will turn the object into a projectile, firing it at the passenger's body, causing serious injury or even death.

Warning: When airbags are deployed, airbag related components in the steering wheel and instrument panel and at both sides of the roof rails above front and rear doors will become very hot. Do not touch airbag related components immediately after the airbags are deployed to avoid injuries.

Warning: DO NOT knock or strike the position where airbags or related parts are located, so as to avoid serious injury or even death due to accidental airbag deployment.

In the event of a collision, the airbag control module monitors the rate of deceleration or acceleration induced by the collision, to determine whether the airbags should be deployed. Airbag deployment is virtually instantaneous and occurs with considerable force, accompanied by a loud noise.

In the event of a severe frontal collision, a completely deployed airbag, along with a correctly worn seat belt, can limit the movement of the driver and front passenger, reducing the risk of head and chest injuries. For vehicles fitted with side airbags and side curtain airbags, when the vehicle encounters a serious side collision, the completely deployed airbag will form an air cushion between the occupant and the vehicle side to reduce the risk of body side injuries.

When you sit upright in the seat and against the backrest, seat belts and airbags can provide the most effective protection. When encountering a serious collision, airbags will deploy quickly and with force. At this time, if you or other passengers are not using seat belts correctly, leaning forward, reclining excessively or sitting with an incorrect posture, you or other passengers are likely to suffer from serious or even fatal injuries.

IMPORTANT

- Airbags can not protect lower body parts of passengers.
- Airbags are not designed for a rear collision, minor frontal collision, vehicle overturn, or emergency braking.
- Deployment and deflation of the airbags takes place very quickly and will not protect against the effects of secondary impacts that may occur.
- When an airbag inflates, some fine powders are released. This is not an indication of a malfunction; however, the powder may cause irritation to the skin and should be thoroughly flushed from the eyes and any cuts or abrasions of the skin. If your skin, eyes, nose or throat etc feels uncomfortable, please consult a doctor.
- After inflation, the airbags deflate immediately. This ensures that the driver's forward vision is not obscured.

Front Airbags

Warning: NEVER use a rearward facing child restraint on a seat protected by an ACTIVE AIRBAG in front of it, DEATH or SERIOUS INJURY to the CHILD can occur. Refer to 'Disabling the Passenger Airbag'.

Warning: Front seat passengers should not place feet, knees or any other part of the body in contact with or in close proximity to a front airbag.

Warning: In extreme cases driving on very uneven surfaces may cause airbag deployment. Please take extra care when driving on uneven roads.

Front airbags are designed to deploy during serious frontal or similar collisions. Airbags may be deployed in the following situations:

- A frontal collision with unmovable or non deformable solid objects at a high speed.
- Conditions that can cause serious chassis damage, such as a collision with kerbstones, road edges, deep ravines or holes.

Side Airbags, Centre Airbag and Side Curtain Airbags

Warning: The structure and material of the seat is important to ensure correct deployment of airbags. Therefore, please do not fit seat covers which may affect the deployment of the side and middle airbags.

In the event of a serious side impact, the front side airbag on the impacted side and centre airbag will deploy from the outer seat backrest cover, and the side curtain airbag will deploy from the roof interior trim. The side airbag and side curtain airbag on the other side will not deploy. Conditions described below or similar ones may cause side airbag, centre airbag and side curtain airbag deployment.

- One side of the vehicle is in a high speed collision with a normal passenger car.

Conditions in Which Airbags Will Not Deploy

The deployment of airbags does not depend on the vehicle speed, but on the object that the vehicle hits, angle of impact and the rate at which the car changes speed as a result of a collision. When the impact force of collision is absorbed or dispersed to vehicle body, airbags may not deploy; however, airbags may sometimes deploy according to impact condition. Therefore, the deployment of airbags shall not be judged based on the severity of vehicle damage.

Front Airbags

Under certain conditions the front airbags may not be deployed. Some examples are listed below:

- The impact point is not central to the vehicle.
- The collision is with a solid utility pole or traffic sign post.
- Collision with the bottom part of the truck's liftgate; a cut-in collision with a truck or a vehicle with a higher chassis.
- Frontal collision at an angle with guardrails.
- Impacts to the rear or side of the vehicle.
- Vehicle rollover.

Side Airbags, Centre Airbag and Side Curtain Airbags

Under certain conditions the seat side and centre airbags and side head airbags may not be deployed. Some examples are listed below:

- Side impacts at certain angles.
- Side impact with a motorcycle.
- Side impact on front compartment.
- Side impact on trunk.
- Vehicle rollover.
- Frontal collision at an angle with guardrails.
- Side collision with posts.
- Frontal collision with parking or moving vehicles.
- Rear collision.

Front Passenger Airbag Disable Switch*

Warning: This switch should only be used to deactivate the front passenger airbag when a rear-facing child restraint system is installed in the front passenger seat.

Warning: Please ensure that the front passenger airbag is activated when an adult is seated in the front passenger seat.

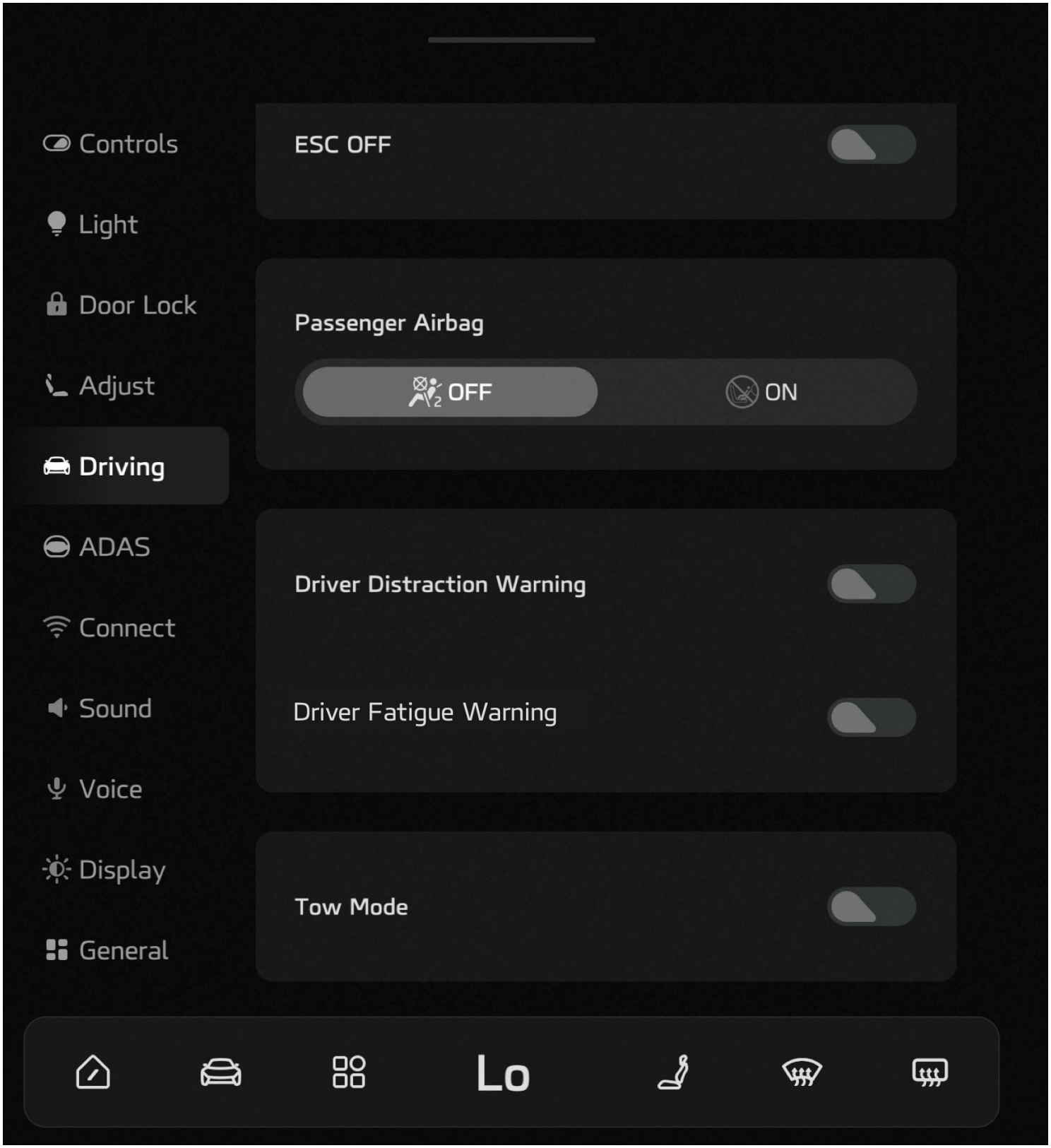

The front passenger side airbag disable function can be turned on or off by using the 'Car Settings'-'Driving'-'Passenger airbag' path on the central screen.

Front passenger airbag 'On/Off' status is displayed on the driver instrument screen.

When the passenger airbag is deactivated, the 'Passenger Airbag Off' indicator illuminates.

 When the passenger airbag is activated, the 'Passenger Airbag On' indicator illuminates.

PAB switch-German

Die Auslösefunktion des Beifahrerairbags kann durch Anklicken des entsprechenden Schalters im Pfad „Fahrzeugeinstellungen“ - „Fahren“ - „Beifahrerairbag“ auf dem Zentraldisplay aktiviert oder deaktiviert werden.

Der Status „Aktiviert/Deaktiviert“ des Beifahrerairbags wird auf dem Fahrerdisplay angezeigt.

 Wenn der Beifahrerairbag deaktiviert ist, leuchtet die Kontrollleuchte „Beifahrerairbag Deaktiviert“ auf.

 Wenn der Beifahrerairbag aktiviert ist, leuchtet die Kontrollleuchte „Beifahrerairbag Aktiviert“ auf.

PAB switch-French

Activez ou désactivez la fonction de déploiement de l'airbag du passager avant en cliquant sur le commutateur correspondant dans le chemin « Réglages du véhicule » - « Conduite » - « Airbag du passager » sur l'écran central. L'état « ouvert/fermé » de l'airbag passager s'affiche sur l'écran du conducteur.

 Lorsque l'airbag passager est désactivé, le témoin « Airbag latéral passager fermé » s'allume.

 Lorsque l'airbag passager est activé, le témoin « Airbag latéral passager ouvert » s'allume.

PAB switch-Bulgarian

Активирайте или деактивирайте функцията за активиране на въздушната възглавница на предния пътник, като кликнете върху съответния превключвател в пътя 'Настройки на Автомобила' - 'Шофиране' - 'Въздушна възглавница на пътника' на централния екран.

Статусът 'Отворено/Затворено' на въздушната възглавница за предния пътник се показва на екрана на инструментите на водача.

 Когато въздушната възглавница на пътника е деактивирана, светва индикаторът 'Въздушна Възглавница за Пътника Затворена'.

 Когато въздушната възглавница на пътника е активирана, светва индикаторът 'Въздушна Възглавница за Пътника Отворена'.

PAB switch-Croatian

Upravljajte funkcijom otvaranja suvozačevog zračnog jastuka za aktiviranje ili deaktiviranje klikom na odgovarajući prekidač na putu 'Postavke automobila' - 'Vožnja' - 'Zračni jastuk za suvozača' na središnjem zaslonu.

Status zračnog jastuka suvozača 'Otvoren/Zatvoren' prikazan je na zaslonu instrumenta za vozača.

 Kada je zračni jastuk suvozača deaktiviran, svijetli indikator 'Bočni zračni jastuk suvozača zatvoren'.

 Kada je zračni jastuk suvozača aktiviran, svijetli indikator 'Bočni zračni jastuk suvozača otvoren'.

PAB switch-Greek

Λειτουργήστε τη λειτουργία ενεργοποίησης/απενεργοποίησης του μπροστινού αερόσακου συνοδού κάνοντας κλικ στο αντίστοιχο διακόπτη μέσω της διαδρομής 'Ρυθμίσεις Οχήματος' - 'Οδήγηση' - 'Αερόσακος Συνοδού' στην κεντρική οθόνη.Η κατάσταση 'Ανοιχτό/Κλειστό' του αερόσακου του επιβάτη εμφανίζεται στην οθόνη οργάνων του οδηγού.

 Όταν ο αερόσακος συνοδού είναι απενεργοποιημένος, αναβοσβήνει η ένδειξη 'Κλειστος Αερόσακος Συνοδού'.

 Όταν ο αερόσακος συνοδού είναι ενεργοποιημένος, αναβοσβήνει η ένδειξη 'Ανοιχτος Αεροσακος Συνοδού'.

PAB switch-Czech

Pro aktivaci nebo deaktivaci funkce airbagu spolujezdce vpředu stiskněte odpovídající přepínač v cestě 'Nastavení Vozidla' - 'Jízda' - 'Airbag spolujezdce' na centrální obrazovce.

Stav 'Otevřeno/Zavřeno' airbagu spolujezdce se zobrazuje na přístrojové desce řidiče.

 Když je airbag spolujezdce deaktivován, rozsvítí se kontrolka 'Airbag Spolujezdce Zavřený'.

 Když je airbag spolujezdce aktivován, rozsvítí se kontrolka 'Airbag Spolujezdce Otevřený'.

PAB switch-Danish

Betjen funktionen til aktivering/deaktivering af forsædets passagerairbag ved at klikke på den tilsvarende kontakt i menuen 'Bilindstillinger' - 'Kørsel' - 'Passagerairbag' på centralskærmen.Frontpassager airbag 'Åben/Lukket'-status vises på førerens instrumentskærm.

 Når passagerairbag er deaktiveret, tændes indikatoren 'Passagerairbag Lukket".

 Når passagerairbag er aktiveret, tændes indikatoren 'Passagerairbag Åben'.

PAB switch-Estonian

Eesmise passenger poolne turvapadi aktiveerimise funktsiooni saab aktiveerida või deaktiveerida, kasutades kesksel ekraanil olevat vastavat lülitit tee 'Auto seaded'-'Sõitmine'-'Passenger turvapadi' kaudu.

'Ava/Keela' seisukorras passenger turvapadi kuvatakse juhi näidikuekraanil.

 Kui Passenger turvapadi deaktiveeritud, süttib signaal 'Passenger poolne turvapadi Suletud '.

 Kui Passenger turvapadi aktiveeritud, süttib signaal 'Passenger poolne turvapadi Avatud '.

PAB switch-Swedish

Aktivera eller deaktivera funktion för frampassagerarens airbag genom att klicka på motsvarande knapp i vägen 'Bilinställningar' - 'Körning' - 'Passagerarkrockkudde' på den centrala skärmen.

'Öppen/Stängd'-status för den främre passagerarkrockkudden visas på förarens instrumentpanel.

 När passagerarkrockkudden är avaktiverad tänds indikatorn 'Passagerarkrockkudde Stängd'.

 När passagerarkrockkudden är aktiverad tänds indikatorn 'Passagerarkrockkudde Öppen'.

PAB switch-Hungarian

A műveleti utasítás szerint a bal első utas légzsák aktiválási/deaktiválási funkcióját a 'Kocsi beállítások' - 'Vezetés' - 'Utasoldali légzsák' menüpontban található kapcsolóra kattintva lehet be- vagy kikapcsolni a központi kijelzőn.Az utasoldali légzsák 'Nyitva/Zárva' állapota a vezető műszerfalán jelenik meg.

 Amikor az utasoldali légzsák ki van kapcsolva, az 'Utasoldali Légzsák Zárva' jelző felvillan.

 Amikor az utasoldali légzsák be van kapcsolva, az 'Utasoldali Légzsák Nyitva' jelző felvillan.

PAB switch-Italian

Attivare o disattivare la funzione di attivazione dell'airbag del passeggero anteriore cliccando sull'interruttore corrispondente nel percorso 'Impostazioni Auto' - 'Guida' - 'Airbag passeggero' sullo schermo centrale.

Lo stato 'Aperto/Chiuso' dell'airbag passeggero anteriore è visualizzato sullo schermo degli strumenti del conducente.

 Quando l'airbag passeggero è disattivato, si illumina l'indicatore 'Airbag Lato Passeggero Chiuso'.

 Quando l'airbag passeggero è attivato, si illumina l'indicatore 'Airbag Lato Passeggero Aperto'.

PAB switch-Latvian

Jūs varat ieslēgts vai izslēgts priekšējās pasažiera puses gaisa spilvena izplešanās funkciju, noklikšķinot uz attiecīgā slēdža ceļā 'Automašīnas iestatījumi' - 'Braukšana' - 'Pasažiera gaisa spilvens' centrālajā ekrānā.

Priekšējās pasažiera gaisa spilvena ATVĒRTS/AIZVĒRTS statuss tiek attēlots vadītāja instrumentu ekrānā.

 Kad pasažiera gaisa spilvens ir izslēgts, iedegas indikators 'Pasažiera puses gaisa spilvens Aizvērts'.

 Kad pasažiera gaisa spilvens ir ieslēgts, iedegas indikators 'Pasažiera puses gaisa spilvens Atvērts'.

PAB switch-Lithuanian

Naudokite priekinio keleivio oro pagalvės išsiskleidimo funkciją, kad įjungtumėte arba išjungtumėte, spustelėdami atitinkamą jungiklį centriniame ekrane esančiame skiltyje 'Automobilio nustatymai' –'Vairavimas' –'Keleivių oro pagalvė'.

Priekinės keleivio oro pagalvės būsena 'Atidaryta/uždaryta' rodoma vairuotojo prietaisų ekrane.

 Kai keleivio oro pagalvė išjungta, užsidega indikatorius 'Uždaryta keleivio šoninė oro pagalvė'.

 Kai įjungiama keleivio oro pagalvė, užsidega indikatorius 'Atvira keleivio šoninė oro pagalvė'.

PAB switch-Dutch

De activeringsfunctie van de airbag aan de passagierszijde voorin kan worden geactiveerd of gedeactiveerd door de overeenkomstige schakelaar te klikken via het pad 'Auto-instellingen'-'Rijden'-'Passagiersairbag' op het middendisplay.

De 'Open/Gesloten' status airbag aan de passagier voorin wordt weergegeven op het instrumentenscherm van de bestuurder.

 Wanneer de passagier is activeerd, the 'Airbag aan de passagierszijde Gesloten' signaal oplicht.

 Wanneer de passagier wordt geactiveerd, the 'Airbag aan de passagierszijde Open ' signaal oplicht.

PAB switch-Norwegian

Operer funksjonen for utplassering av foran passasjersiden airbagsystemet for å aktivere eller deaktivere den ved å klikke på den tilsvarende bryteren i 'Bilinnstillinger' - 'Kjøring' - 'Passasjerens luftpute' på den sentrale skjermen.

Statusen ÅPEN/LUKKET for foran passasjer airbag vises på førerens instrumentdisplay.

 Når passasjer airbag er deaktivert, lyser indikatoren 'Passasjerside airbag Lukket'.

 Når passasjer airbag er aktivert, lyser indikatoren 'Passasjerside airbag Åpen'.

PAB switch-Polish

Funkcję aktywacji Poduszka powietrzna po pasażera z przodu można aktywować lub dezaktywować poprzez kliknięcie odpowiedniego przełącznika w ścieżce 'Ustawienia samochodu'-'Jazda'-'Poduszka powietrzna pasażera' na wyświetlaczu centralnym.

Poduszka powietrzna pasażera z przodu w stanie 'Otwarte/Zamknięte' jest wyświetlana na ekranie przyrządów kierowcy.

 Po włączeniu poduszki powietrznej pasażera zapala się sygnał ' Poduszka powietrzna po stronie pasażera zamknięta'.

 Po włączeniu poduszki powietrznej pasażera zapala się sygnał 'Poduszka powietrzna po stronie pasażera otwarta'.

PAB switch-Portuguese

A função de ativação ou desativação do airbag do passageiro dianteiro pode ser operada tocando no interruptor correspondente no caminho “Configurações do Veículo” > “Direção” > “Airbag do Passageiro” na tela central.

O status de “Ativado/Desativado” do airbag do passageiro dianteiro é exibido no painel de instrumentos do motorista.

 Quando o airbag do passageiro está desativado, o indicador “Airbag do Lado do Passageiro Desativado” se acende.

 Quando o airbag do passageiro está ativado, o indicador “Airbag do Lado do Passageiro Ativado” se acende.

PAB switch-Romanian

Operați funcția de desfășurare a airbag-ului pasagerului din față pentru a activa sau dezactiva apăsând comutatorul corespunzător din calea 'Setări Auto' - 'Conducere' - 'Airbag pasager' de pe ecranul central.

Starea 'Deschis/Închis' a airbagului pasagerului din față este afișată pe ecranul de instrumente al șoferului.

 Când airbagul pasagerului este dezactivat, se aprinde indicatorul 'Airbag Pasager Închis'.

 Când airbagul pasagerului este activat, se aprinde indicatorul 'Airbag Pasager Deschis'.

PAB switch-Slovak

Funkciu aktivácie/deaktivácie predného airbagu spolujazdca ovládate kliknutím na príslušné tlačidlo v menu 'Nastavenia auta' - 'Jazda' - 'Airbag spolujazdca' na centrálnej obrazovke. Stav predného bočného airbagu spolujazdca 'Otvorený/Zatvorený' sa zobrazuje na displeji vodiča.

 Keď je airbag spolujazdca vypnutý, rozsvieti sa indikátor 'Airbag Spolujazdca Zatvorený'.

 Keď je airbag spolujazdca zapnutý, rozsvieti sa indikátor 'Airbag Spolujazdca Otvorený'.

PAB switch-Slovenian

Operirajte funkcijo razpihovanja prednje zračne blazine na sovozniški, da jo vklopite ali izklopite, tako da kliknete ustrezen gumb v 'Nastavitve vozila' - 'Vozna nastavitve' - 'Zračna blazina na sovoznika' na osrednjem zaslonu.

Stanje ODPRTO/ZAPRTO prednje zračne blazine na sovozniški je prikazano na instrumentih voznika.

 Ko je zračna blazina na sovozniški izklopljena, sveti lučka 'Zračna blazina na sovozniški strani Zaprta'.

 Ko je zračna blazina na sovozniški vklopljena, sveti lučka 'Zračna blazina na sovozniški strani Odprta'.

PAB switch-Spanish

Para activar o desactivar la función de despliegue del airbag del pasajero delantero, haga clic en el interruptor correspondiente en la ruta 'Ajustes del vehículo'-'Conducción'-'Airbag del pasajero' en la pantalla central.

El estado 'Abierto/Cerrado' del airbag del pasajero delantero se muestra en la pantalla de instrumentos del conductor.

 Cuando se desactiva el airbag del pasajero, se enciende el indicador 'Airbag del Lado del Pasajero Cerrado'.

 Cuando se activa el airbag del pasajero, se enciende el indicador 'Airbag del Lado del Pasajero Abierto'.

IMPORTANT
If both the "Passenger Airbag Off" and "Passenger Airbag On" indicators are illuminated simultaneously, or if the indicators do not match the actual status of the passenger airbag switch, please contact an After-sales Repairer immediately for inspection.

Service and Replacement of Airbags

Service of SRS Components

Warning: Improper operation of the airbag may cause serious injury. DO NOT remove, maintain or alter SRS components or circuits without permission.

Warning: Changes to vehicle structure is prohibited. This may affect the normal operation of the SRS.

Warning: When cleaning the airbag trim cover, please use soft and dry cloth or cloth dampened with clean water.

Warning: DO NOT allow these areas to be flooded with liquid and DO NOT use petrol, detergent, furniture cream or polishes.

Warning: If water enters the vehicle, it may cause damage to the SRS. In this case, even if the collision does not occur, the airbag may accidentally deploy. Please power down the vehicle and disconnect the battery cable. Contact an After-sales Repairer for service.

If the airbag warning light fails to illuminate or stays on, or if there is damage to the front or side of the vehicle, or the airbag covers show signs of damage, please contact an After-sales Repairer immediately to check the SRS.

IMPORTANT

- The removal or replacement of an airbag module should be carried out by an Authorised After-sales Repairer.
- After 10 years from the initial date of registration (or replacement of an airbag), it is recommended that the airbags and corresponding components be replaced to maintain the original safety standards. If you have any doubt about an SRS component within this period, we recommend you consult an After-sales Repairer.

Replacement of SRS Components

Warning: Even if the airbag does not deploy, collisions may cause damage to the SRS in the vehicle. Airbags may not function properly after damage, and can not protect you and other passengers if a second collision occurs, which may cause serious injury or even death. To ensure that the SRS can function properly after a collision, please visit an After-sales Repairer to check airbags and replace where necessary.

Airbags are designed for single use only. Once the airbag is deployed, you must replace the SRS components.

Disposal of Airbags

When your vehicle is sold, ensure that the new owner knows the vehicle is equipped with airbags, and is aware of the replacement date of the SRS.

If the vehicle is scrapped, the undeployed airbags may have potential risks, therefore, before the disposal, they must be deployed safely in a certain environment by a professional agency or an Local Authorised Repairer.

Child Restraint

Important Instructions for Using Child Restraint

It is recommended that children below the age of 12 years old should be seated on the rear seat of the vehicle, in a child restraint system appropriate to the children's age, weight and height. Infants less than 2 years old should be restrained in an infant child restraint system. Compared with adults, children's muscles and bones do not fully develop, so you need to use dedicated child restraints to protect children. Use child restraints in rear seats to protect children based on the child's age, height and weight.

It is recommended that a child restraint system that complies with ECE-R129 is fitted in this vehicle. When choosing a child restraint, check relevant marks or instructions about the height range applicable for the child restraint and the usage message on it.

When installing and using a child restraint, it is necessary to comply with relevant laws and regulations, the instructions supplied by the child restraint manufacturer, and the instructions on children's safety in this Handbook.

The correct use of child restraints will greatly reduce children's injury risk in accidents or relieve any injury severity, please pay special attention to the following when you use child restraints:

1. It is recommended that children shorter than 1.5 meters (or under 12 years of age) should use the appropriate child restraint, and cannot use a regular seat belt, otherwise it may cause abdominal or neck injuries.

2. Never let children ride in an unprotected situation. Care should not be overlooked just because children are sitting in the child restraint.

3. Only one child may be carried in any one restraint.

4. DO NOT put the child (including infant) on the lap or in arms when sitting in any seat.

5. Only proper child restraints can provide protection for your children.

6. A front seat may need to be adjusted frontward for installing the rear-facing child restraint to the rear seats.

7. The position of seat head restraints may need to be adjusted for installing a forward-facing child restraint to the rear seats.

8. Never let your children stand or kneel on the seat whilst traveling; otherwise, your children may be tossed or thrown, leading to injury to not only the child but also other occupants if an accident occurs.

9. If a child's body is leaning too far forward or the posture is not correct whilst traveling, then an accident will increase the risk of injury.

10. The method of using seat belts has a great influence on the maximum protection offered by the seat belt, so you must comply with the child restraint manufacturer's instructions on correct use of seat belts. If seat belts are not properly fastened, even a minor traffic accident may lead to injury.

11. Child restraints that are not fitted and secured correctly may move and injure other occupants in the event of an accident or emergency braking. Therefore, even if there is no infant or child in the child restraint, it should be fitted properly and securely in the vehicle.

Warnings and Instructions on Use of Child Restraint on Front Passenger Seat

Warning: NEVER use a rearward facing child restraint on the front passenger seat with the front passenger airbag activated, otherwise DEATH or SERIOUS INJURY to the CHILD may occur.

Warning: Use one child restraint per child.

Warning: NEVER share a seat belt amongst children. In the event of an accident or collision, the children are not secure. It could cause death or serious injury.

Warning: In cases where there is a need to install a rear facing child restraint on the front passenger seat, use the entertainment display to deactivate the front passenger airbag function or SERIOUS INJURY or even DEATH can occur.

Warning: Once the child restraint is removed from the front passenger seat, use the entertainment display to reactivate the front passenger airbag.

Warning: When installing a child restraint on the front passenger seat, move the front passenger seat as far rearward as possible.



Please study the airbag safety warning label on the sun visor. Always install the child restraint in the rear seat for security reasons. The above warning must be noted in special cases where the child restraint must be used on front passenger seat.

If a child restraint must be used on front passenger seat, please follow the instruction below.

IMPORTANT

- Move the front passenger seat as far back as it can be adjusted to create the largest possible distance between the child seat and the front passenger front airbag.
- Set the seat belt heights so that the seat belt routing follows a natural path adapted to the child seat without excessive deviations. For rear-facing child seats, use the lowest position of the belt height adjuster.
- Only use child seats that have been approved by the child seat manufacturer for use on a front passenger seat with front and side airbag.

Side Airbags and Children's Safety

Warning: Children should not be allowed in areas where airbags may deploy, or there is a risk of serious injury.

Warning: Only recommended child restraints suitable for the age, height and weight of the child should be used and firmly fixed in the vehicle.

Warning: Do not place any items in areas where side airbags may deploy, or there is a risk of serious injury.

In the event of a side collision, the side airbags can provide better protection for the passenger. However, when the airbag is triggered, a very strong expansion force is generated. If the passenger's seating position is not correct, the airbags or items in the side airbag deployment area may cause injury.

Therefore, only the correct child restraint should be used to secure the child correctly in the seat and the child's seating position must be correct, ensuring that there is enough space between the child and the side airbag deployment region for the airbag to deploy without any hindrance, and thus provide the best protection.

Child Restraints Groups and Installation Position

Only approved child restraints suitable for children are allowed. Children taller than 1.5m may directly use the seat belts in the vehicle. Child restraints must comply with relevant regulations or standards, such as EU regulations ECE-R129.

Recommended Child Restraint Systems

ECE-R129 classification is based on a child's height

Child Height	Recommended [a)]
40~83cm	Maxi Cosi Pebble 360
76~105cm	Britax Römer TriFix[2] i-Size
100~135cm	Britax Kidfix i-Size[b)]
100~150cm	Graco Booster Basic R129

Note:

a) Always refer to the CRS manual for instructions of use.

b) For the best protection, it is recommended to use this child restraint system with the included backrest and be sure to attach the seatbelt through Secure Guard and XP-Pad. The side impact extensions should be used and extended to the outermost when in use.

Suitable Seats for Attaching Child Restraint Systems

	Seating Position					
Seating Position	**Front Driver**	**Front Passenger[1]**		**2nd Row Left**	**2nd Row Centre[2]**	**2nd Row Right**
		With Front Passenger Airbag Activated	**With Front Passenger Airbag Deactivated**			
Seating position suitable for universal belted(yes/no)	No	Yes (Forward facing only)	Yes	Yes	Yes	Yes
I-Size seating position(yes/no)	No	No	No	Yes	No	Yes
Seating position suitable for lateral fixture(L1/L2)	No	No	No	No	No	No
Largest suitable rearward facing fixture (R1/R2x/R2/R3)	No	No	No	R3	No	R3
Largest suitable forward facing fixture(F1/F2x/F2/F3)	No	No	No	F3	No	F3
Largest suitable booster fixture(B2/B3)	No	(B2/B3) [3]	(B2/B3) [3]	B2/B3	(B2/B3) [3]	B2/B3

Note:

• [1]When installing a CRS on the front passenger seat, adjust the front passenger seat as high as possible to securely install the CRS.

• [2]When installing a CRS on the second Row Center seat, pull the buckle out to ensure that the CRS is in a correct and stable position.

• [3]Only applicable for installation with seat belt.

• During the installation of the CRS, the backrest angle of seats should be adjusted reasonably to ensure that the CRS remains stable.

• During the installation of the CRS, the height of the headrest should be adjusted reasonably or the headrest should be removed to make the backrest of CRS flat to the vehicle seat. Do not remove the head restraint when using a booster cushion with no backrest. Ensure all removed head restraints are stowed safely. Refit the head restraint once the CRS has been removed.

Secure Child Restraints with Seat Belt

Warning: Never place a rear-facing child restraint on the front passenger seat, severe injury or even death can occur.



The child restraint can be secured to the rear seat using the lap and shoulder belts.

Secure Child Restraints with ISOFIX/i-Size Device

Warning: The ISOFIX/i-Size anchorages in the rear seat are designed for use with ISOFIX/i-Size systems only.

Warning: Child restraint anchorages are designed to withstand only those loads imposed by correctly fitted child restraints. Under no circumstances are they to be used for adult seat belts, harnesses or for attaching other items or equipment to the vehicle.

The rear seats of this vehicle on both sides are provided with ISOFIX/i-Size interface (as indicated by the arrow in the figure below) connected to the ISOFIX/i-Size child restraint. When installing and removing any child restraint system, always follow the manufacturer's instructions.

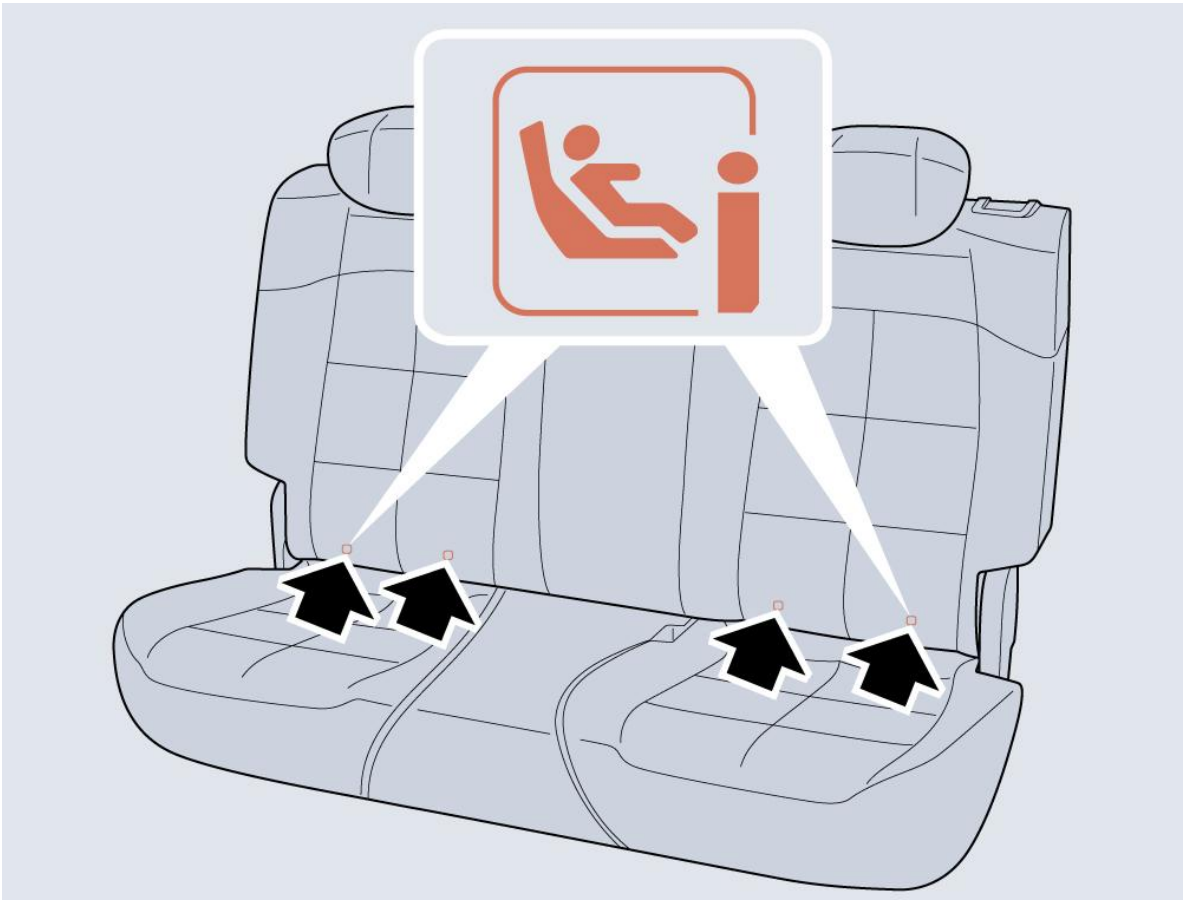

1. Fasten vehicle-approved ISOFIX child restraint systems to the mounting brackets.

2. When using ISOFIX mounting brackets for seat mounting, universally approved child restraint systems for ISOFIX may be used.

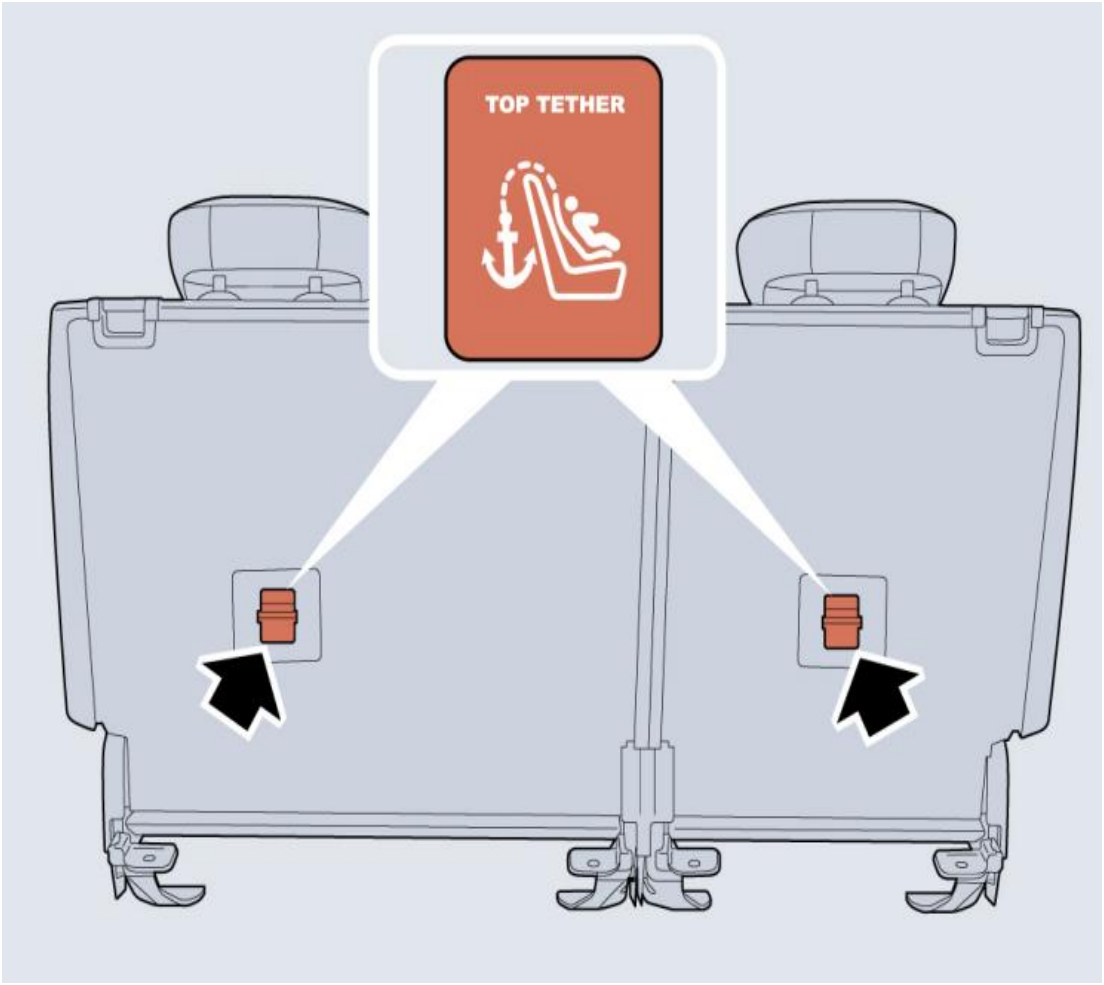

3. The top-tether (as arrowed in the figure above) for auxiliary fixation of the child restraint is provided at the back of the rear left seat backrest and at the back of the rear right seat. The single top-tether of the child restraint must pass through space between the rods of the rear seat headrest, and dual tether must pass from both sides of the rear seat headrest.

Note:

- *When installing a child restraint with top-tether, the top-tether must be connected with and fixed to the top-tether anchor.*
- *When using a seat mounted, universally approved child restraint system, the top tether must be used. To fasten the top tether of the child restraint system, route the tether under the rear headrest and attach to the anchorage hook.*
- *When fixing the top tether, be careful not to twist the top tether.*
- *If not using ISOFIX/i-Size lower anchorages, using the seatbelt, complete the installation in line with the child restraint manufacture's instruction.*

4. After the installation, push or shake the child restraint with moderate force to confirm it is secured correctly.

Gear Shift and Driving

Gear Shift

Warning: Do not press P gear button whilst in motion.

Warning: Whilst the vehicle is moving, do not move the shift lever from D to R or P gear, this may cause damage to the electric drive units or cause an accident.

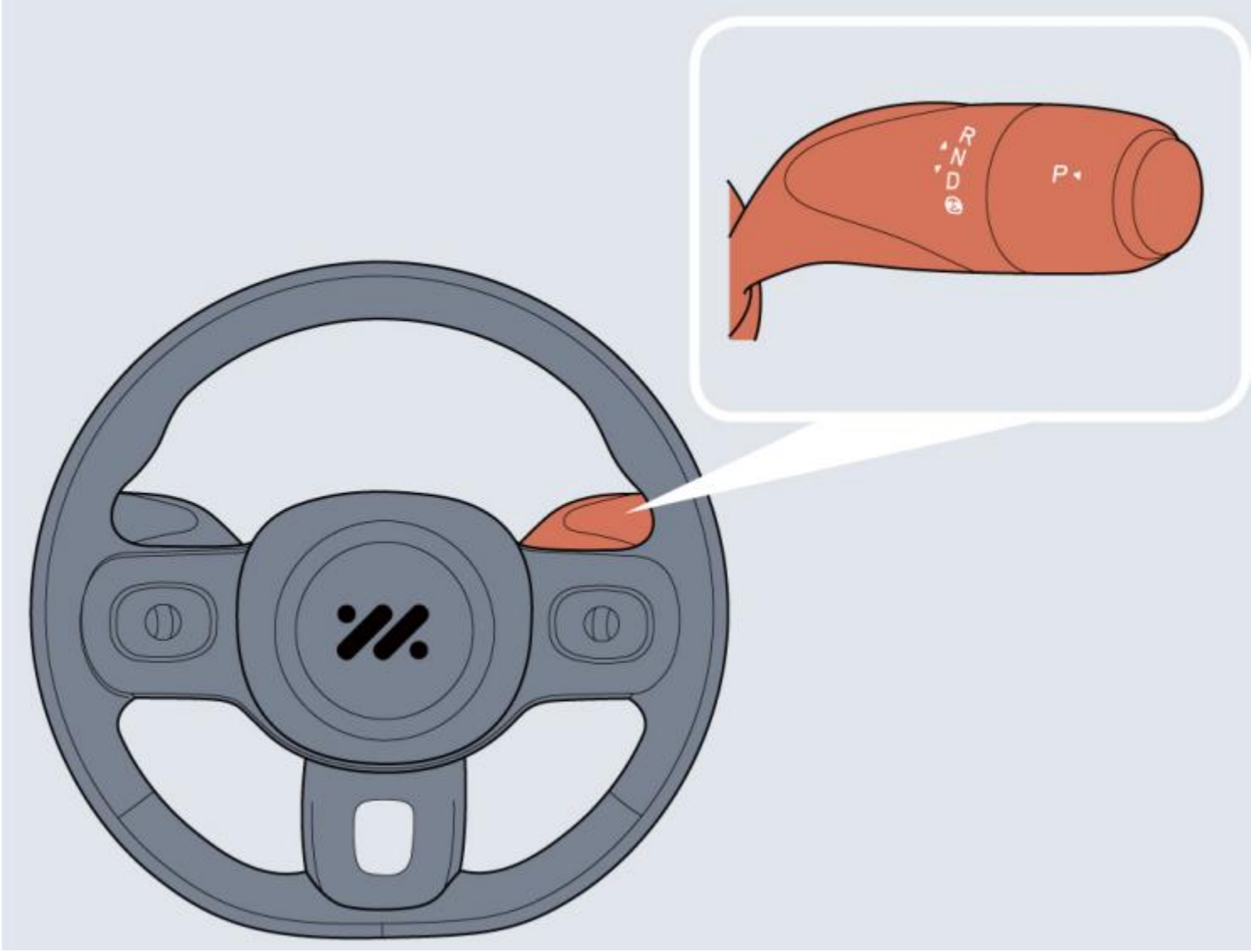

The shift lever is a sprung lever switch that rests in the middle steady-state position, pushing the lever up or down against the spring accesses two non-steady-state positions.

P: Park

In this position, the vehicle will be locked. Please select this gear when the vehicle is stationary.

- Press the P gear button at the end of the shift lever to shift into P gear.
- Switch off the power supply to automatically shift into P gear.
- With the brake pedal released, the driver seat belt unfastened and the driver's door open, the vehicle will shift to P gear

automatically.

P (Park) is the initial gear position when the vehicle is first placed in READY mode. When switching to R, D and N gears, the brake pedal needs to be pressed.

R: Reverse

This gear should only be selected when the vehicle is completely stationary and the driver has a willingness to drive backwards.

Press the brake pedal, move the lever fully upwards against spring pressure and the vehicle will shift into Reverse gear. The design of the shift lever means that when released after selection, the lever will return to the middle steady-state position.

N: Neutral

Only select this gear when the vehicle is stationary (for example, waiting at traffic lights).

- With the vehicle in P gear, press the brake pedal, push the shift lever up or down to the first non-steady state position, and the vehicle will shift into Neutral gear.

- With the vehicle in D gear, push the shift lever up to the first non-steady state position, and the vehicle will shift into Neutral gear.

Note: When vehicle speed is above a certain value, and the vehicle is switched from D gear to N gear, the lever must be held in the N gear selection position for 1s to shift into N gear.

- With the vehicle in R gear, push the shift lever down to the first non-steady state position, and the vehicle will shift into Neutral gear.

D: Drive

It is used for normal driving.

- With the vehicle in P/R/N gear, press the brake pedal, push the lever fully downwards against spring pressure, and the vehicle will shift into Drive gear. The design of the shift lever means that when released after selection, the lever will return to the middle steady-state position.

Energy Recovery during Coasting

Warning: The reduction in vehicle speed caused by energy regeneration cannot replace the braking required for safety. PLEASE ALWAYS be prepared for braking to ensure driving safety.

When the vehicle is in a coasting state, the energy recovery function will be activated, and the motor will convert part of the kinetic energy of the vehicle into electrical energy, which is then stored in the high-voltage battery.

Energy cannot be regenerated or the regeneration is restricted under the following conditions:

- The vehicle is in N gear (It is recommended never to coast in N gear while driving);
- During torque intervention (gear shifting, tyre skidding, etc.);
- High-voltage battery is fully charged;
- High-voltage battery temperature is too high or too low.

Through Central Screen - Settings - Controls - ERS or Central Screen - Settings - Driving - ERS, you can set the following 3 energy recovery modes in the coasting state.

OFF: Energy recovery is turned off.

LOW: Less energy is regenerated, with long coasting distance.

STANDARD: More energy is regenerated, with short coasting distance.

Driving Mode

Warning: Switching between driving modes when the vehicle is in motion can divert the driver's attention away from road conditions and may result in an accident.

Driving mode enables different tuning modes for power, braking, steering, suspension, instrument style, ambient lighting active intake grille, etc.

Through Central Screen - Settings - Driving, you can select Comfort Mode, Energy-saving Mode, Sport Mode, Snow Mode* and Personalized Mode*.

- Comfort Mode: It combines economy, power and comfort, and meets the daily driving needs of users.
- ECO Mode: It runs with optimal energy consumption and extends driving range.

Note: In Energy-saving Mode, the vehicle offers the option of Super Energy Saving Mode, which allows for longer driving range by limiting intelligent drive, A/C power, turning off electrical appliances such as ambient lights, multimedia and displays.

- Sport Mode: The vehicle offers more power and improves riding ability in complex conditions.
- Snow Mode*: The vehicle runs under AWD to provide a more stable driving feel in combination with the systems.
- Custom Mode*: The user can customize power, braking, steering, suspension and other systems to their own requirements.

When the vehicle is in Drive gear, the powertrain will switch between 2WD and 4WD modes according to the actual conditions and the selected driving mode. In Energy-saving Mode, 2WD is preferred; in Sport Mode, 4WD is preferred.

Environmental-friendly Driving

Running-in

The brakes and tyres need time to 'bed-in' and adjust to the demands of everyday motoring. To enhance the long-term operation performance, try to avoid rapid acceleration or emergency braking during the first 932 miles (1,500 km).

Economical Driving and Maintenance

Environmental Protection

Your vehicle has been designed with the latest technology in order to minimise hazards to the environment.

Economical Driving

The way in which you drive your car has a significant bearing on the life span of the car, as well as affecting the electricity consumption:

Drive Smoothly

Traveling at a suitable constant speed is more efficient than frequently braking and accelerating. Avoid making hard acceleration, sudden take-offs and harsh/emergency braking. Steady acceleration or deceleration uses considerably less energy than rapid acceleration or emergency braking, and minimizes the wear to mechanical components.

Avoid Driving at Maximum Speed

Both electricity consumption and noise levels increase significantly at high speeds.

Drive Foreseeingly

Avoid roads with traffic congestion or traffic jams. Predict road congestion as early as possible and keep enough distance from the car in front when driving and slow down in time. Avoid hard braking applications when not necessary, this will cause premature wear on braking components..

Proper Use of Auxiliary Electrical Equipment in Car

Although it is essential to maintain a comfortable interior environment, the use of interior auxiliary electrical equipment will increase electricity consumption.

Check Tyre Pressures Regularly

Over or under-inflated tyres wear out more rapidly and also have a detrimental effect on the car's handling characteristics. Under-inflated tyres increase the rolling resistance of the car which, in turn, increases electricity consumption.

Do Not Carry Unnecessary Loads

The accessories' weight and unnecessary loads consume more electricity, especially in stop/start conditions where the car is frequently required to set off from stationary. Avoid dried dirt/mud sticking. to the vehicle chassis, which not only will reduce body weight, but also can prevent body corrosion.

Maintain Correct Four-Wheel Alignment

Avoid collisions with the kerb and reduce speed on uneven road surfaces. Incorrect four-wheel alignment not only will cause premature tyre wear, but also will increase power load and electricity consumption.

Driving in Special Environments

Driving in Rain or Snow

Warning: Emergency braking, accelerating and steering on slippery roads will reduce the vehicle's handling performance and grip.

- Because visibility is reduced during rain or snow, please drive carefully. If the windows come misted, please use the air-conditioning demist function.
- Because the roads are slippery in wet or icy conditions, please slow down and drive carefully.
- Try to avoid driving at high speed in wet or icy conditions, because a thin film of water will be formed between tyre and road surface that will affect steering and braking performance.

Driving on Waterlogged Roads

Warning: Do not venture into low-lying waterlogged roads or unknown water wading areas, as this may result in the failure of the power system, serious vehicle malfunctions (such as short circuits in electrical components), or damage to the power system due to water ingress! Any vehicle malfunction or damage resulting from this will no longer be covered by SAIC MOTOR CORPORATION LIMITED.

When driving the vehicle, try to avoid passing through waterlogged roads or areas with puddles as much as possible. If you need to drive through water, please follow the following suggestions:

- Before entering the flooded section, the depth of the water must be clear, and the height of the water should not exceed the lower edge of the vehicle body.
- If you must drive through water, you need to turn off the air conditioning before starting, lightly apply the accelerator pedal without releasing your foot, smoothly and slowly pass through the flooded road section, and control the speed to below 6 mph (10 km/h).
- Do not reverse into water or park the vehicle in stagnant water. If driving through water causes the power to shutdown, please do not attempt to power up the vehicle again. Please contact an Authorised Repairer or breakdown service for inspection.
- After passing through water, lightly apply the brake pedal continuously to confirm that the braking performance is normal and avoid emergency braking.
- After passing through water, please check that the lighting and horn functions are normal.
- After wading through water, it may affect the functionality and performance of the vehicle. It is recommended to contact an Authorised Repairer for inspection as soon as possible.

Tyre Pressure Monitoring System (TPMS)

Warning: TPMS can not replace routine maintenance and checks of the tyre condition and pressure.

Warning: Using a device with the radio frequency similar to that of TPMS inside or near the vehicle may interfere the operation of tyre pressure monitoring system, leading to temporary failure alarm.

TPMS monitors the tyre pressure through a radio wave and sensing technique. TPMS sensors can monitor the pressure of vehicle's tyre and send it to a receiver in the vehicle. You can view the tyre pressure via the instrument interface. TPMS can alert you of a low tyre pressure, but it cannot replace normal tyre maintenance. For tyre maintenance, please refer to "Tyre" in the "Maintenance" section.

Note: TPMS only gives the driver a warning when the tyre pressure is low, does not inflate the tyre.



If the TPMS malfunction indicator lamp illuminates, and the warning message "XX Tyre Pressure Low" is displayed, please stop the car as soon as possible, check the tyre pressure and inflate the tyre to the recommended pressure value. The tyre pressure label attached to the B pillar indicates the standard pressure value required by your vehicle tyres when they are cold.

Driving with under-inflated tyres may cause the tyre to overheat and become faulty. In addition, under-inflated tyres wear out more rapidly and also have a detrimental effect on the car's handling characteristics and brake performance which, in turn, increases power consumption.

TPMS Self Learning

When replacing the tyre pressure monitoring system (TPMS) sensors or receivers, or performing a tyre rotation, TPMS self-learning is necessary. Some vehicles can execute this self-learning process as follows:

1. Vehicle is left locked for 25 minutes after being de-energized.

2. Vehicle is driven at speeds exceeding 40 km/h for a continuous duration of 15 minutes, navigating through multiple curves during the journey.

Note: Ensure that the TPMS sensor is an original part.

Note: In case of failure during self-learning, the TPMS malfunction indicator will illuminate. Please repeat the procedure.

If you have any questions regarding the self-learning process, please consult an Authorised Repairer.

Braking and Parking

Integrated Braking System (IBS)

Your vehicle is fitted with the latest Integrated Braking System (IBS), please read the following carefully:

1. The IBS only functions with the power system in READY mode or operational. NEVER allow the vehicle to freewheel with the power system turned off.

2. If the power system is turned off while driving, you should firmly press the brake pedal, and stop the vehicle as quickly as traffic safely permits. If necessary, please contact the Authorised Repairer for service.

3. If the IBS performance degrades due to a low battery or other reasons, you need to apply more force to the brake pedal to brake effectively.

4. When driving on waterlogged roads or in heavy rain, a water film may form on the surface of brake disc, which easily reduces the braking efficiency and extends braking distance. In this case, keep a safe distance from other vehicles and intermittently apply the brake pedal to keep the brake disc surface dry.

5. If the braking efficiency decreases due to vehicle failure, please contact an Authorised Repairer for service as soon as possible.

Brake Response Mode

The system feature 3 braking modes. When the vehicle is stationary, the user can customize the corresponding brake mode on the central screen as required.

1. Comfort: The braking response is moderate and the pedal feel is moderate.

2. Standard: The braking response is normal and the pedal feel is normal.

3. Sport: The braking response is sensitive and the pedal feel is sensitive.

IMPORTANT
If the brake pedal is pressed or any of the Stability Control System (SCS)/Anti-lock Brake System (ABS)/Traction Control System (TCS) is triggered, the switching between braking response modes cannot be completed immediately.

Braking Energy Recovery

IBS supports brake energy recovery. When the brake pedal is pressed for braking, the system will determine the driver's demand for braking force. The drive motor will convert the vehicle's kinetic energy into electrical energy, which is stored in the high voltage battery for vehicle deceleration. This process can improve the range of the vehicle.

Parking Brake System - Electronic Parking Brake (EPB)

Warning: In cases where the EPB cannot be released due to failure, DO NOT move the vehicle with the rear wheels in contact with the road surface, this may cause damage!

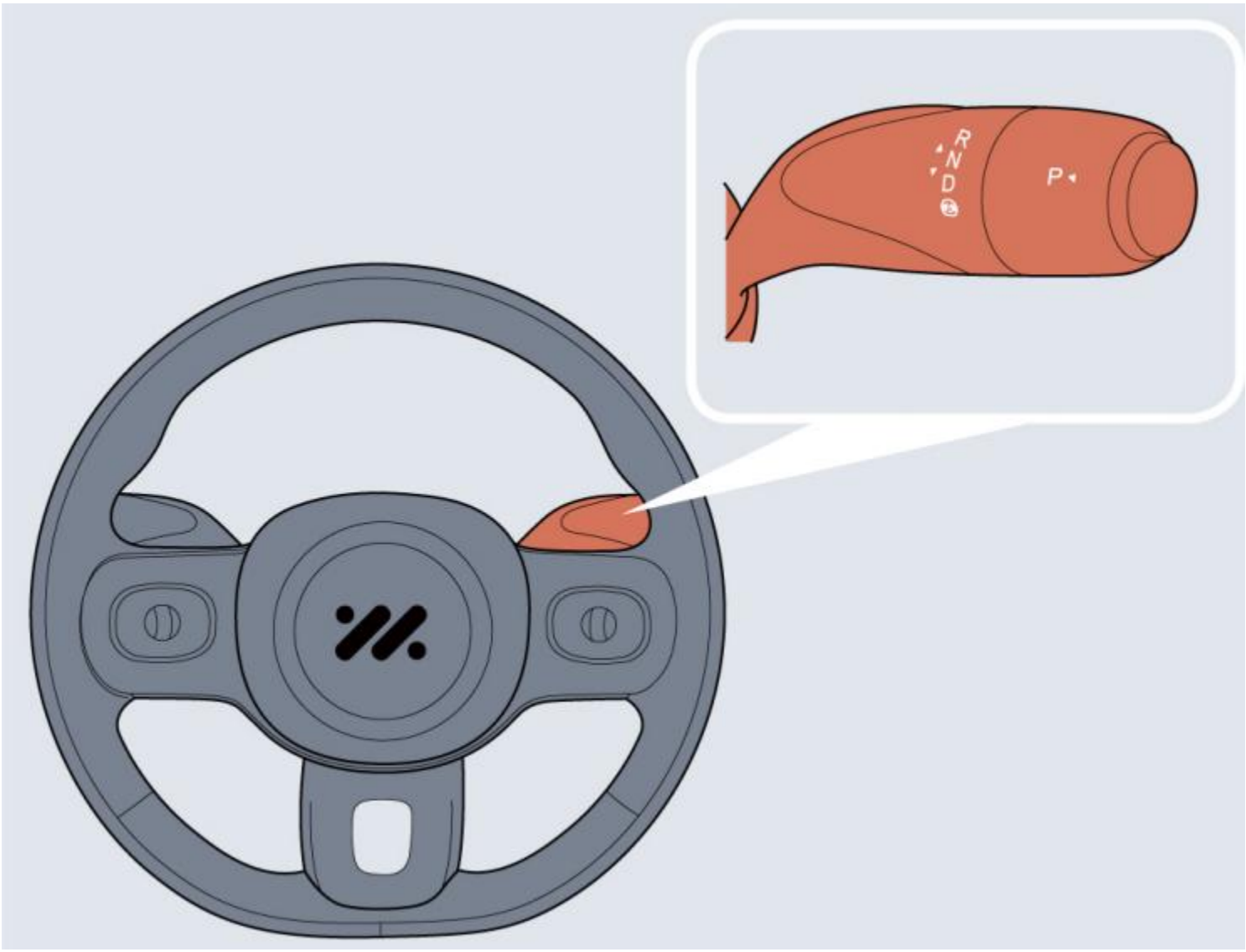

P gear for parking and the EPB are triggered by the same switch. A motor noise may be heard when applying or releasing the EPB.

When the vehicle is stationary, press the EPB switch to apply the EPB.

With the EPB applied, press the brake pedal to shift from P gear to other gears, and the EPB will be released.

With the EPB applied and the vehicle not engaged in P gear, when the driver fastens seat belt, shifts to D or R gear, and presses the accelerator pedal, the EPB will be released.

Note: Always apply the EPB system every time you leave the vehicle.

IMPORTANT

- The EPB cannot be released when the vehicle fails to shift from initial P gear to other gears.
- In the event of a flat battery where it is not possible to apply or release the EPB. In such jumper cables should be used for

emergency vehicle start. Please refer to 'Jump Start' in 'Emergency Information' section.

Emergency Braking with EPB

Warning: Inappropriate use of EPB for emergency braking may lead to accidents and injuries. During normal driving, avoid accidentally touching or pressing the EPB button to prevent accidental deceleration. Do not apply the EPB for braking the running vehicle, unless in emergency.

Warning: During deceleration using the EPB, DO NOT switch off the power system, or this could result in serious injury.

When the car is in motion, in case of any emergency, such as a situation where the car cannot be stopped by the brake pedal, it can be decelerated by pressing and holding the EPB switch.

Continuous audible warning will be heard during emergency braking for deceleration by pressing and holding the EPB switch. To cancel the emergency braking process, release the EPB switch.

Electronic Stability Control System (ESC)

The electronic stability control system includes a Dynamic Stability Control System (SCS) and Traction Control System (TCS).

SCS is designed to assist the driver in maintaining control and the driving direction. When SCS detects that the vehicle is not moving in the intended direction, it will intervene by applying brake force to selected wheels or through the power system to prevent sliding and stabilise the driving direction by correcting the under-steering or over-steering.

TCS contributes to maintaining the control of the vehicle by improving the vehicle's traction trafficability and driving stability. TCS monitors the driving speed of each wheel individually. If spin is detected on one wheel, the system automatically brakes that wheel, transferring torque to the opposite, non-spinning wheel. If the driving wheels are spinning, the system will reduce the output torque of the power system in order to regulate wheel rotation until traction is regained.

Switching On/Off

SCS and TCS are automatically enabled. In the Driving Settings interface of the central screen, click the ESC button to enable SCS and TCS.

Note: Disabling SCS and TCS will not affect the normal operation of ABS. Always disable SCS and TCS when driving with anti-skid chains or snow chains fitted.

Anti-lock Brake System (ABS)

Warning: The ability of ABS to quickly stop the vehicle will be limited at high speeds or on road conditions with risk of aquaplaning (such as waterlogged roads that prevent adequate contact between the tyres and the road surface). In all cases, it remains the driver's responsibility to drive within normal safety limits.

Warning: DO NOT pump the brake pedal at any time; this will interrupt the operation of ABS and may increase the braking distance.

The ABS is mainly used to automatically adjust the braking force of the brake when braking to prevent the wheels from being locked, thus avoiding dangerous situations such as loss of direction or side slip during emergency braking.

This system enables the driver to maintain control over the steering in case of emergency braking, keeps the vehicle stable, and improves the safety factor.

Under normal braking conditions, ABS will not be triggered. However, if the braking force exceeds the adhesion of the tyres to the road surface, causing the wheels to lock, the ABS will automatically come into operation. This will be recognisable by a rapid pulsation felt through the brake pedal.

If emergency braking is required, the driver should apply full braking effort to trigger the ABS even when the road surface is slippery. ABS can ensure that the wheels cannot be locked.

Note: On loose gravel, loose soil or icy roads, the characteristics of the ABS system may extend the braking distance and even improve the steering effectiveness.

IMPORTANT

- Although ABS can greatly improve the driving safety, the real safety still depends on the driver's own standard driving behavior.
- The non-operation of the braking anti-lock brake system (ABS) in part or in whole will not affect the operation of the ordinary brake system.

Auto Hold

Warning: The auto hold system cannot guarantee the stability of the vehicle when starting off on the hill, or braking on hills especially on slippery or icy surfaces.

Warning: When auto hold stops the vehicle, if the electronic parking brake is applied for any reasons (such as powertrain shutdown, releasing the seat belt or turning off the auto hold function, etc.), it cannot be guaranteed that the vehicle will be stabilised in all cases. For example, the rear wheels are on an icy, snowy or slippery road surface, or the parking slope is high. Please make sure that the vehicle is safely stabilised prior to exiting.

Warning: The driver should pay full attention and observe the surroundings even if the vehicle is equipped with auto hold system.

Warning: Auto hold cannot guarantee the electronic parking brake operation in all cases where the power system is shut down. Please ensure the electronic parking brake is applied and the vehicle is stablised prior to exiting the vehicle.

Warning: The auto hold function should be switched off during the use of automatic car washes, the electronic parking brake may suddenly apply and cause vehicle damage.

If the vehicle is required to stop frequently for long periods while driving (such as waiting at the traffic lights, stopping on a slope or in urban stop-and-go conditions), the Auto Hold function can assist you in stabilising the vehicle and prevent it from moving, enabling you to remove your foot from the brake pedal when the vehicle is stationary.

Auto Hold has three states as follows:

1. Standby: With the driver's seat belt fastened, the driver's door closed and the vehicle in READY state, press the Auto Hold button on the central screen to enter the Standby state.

2. Operating: When the vehicle is moving forward, press the brake pedal to stop the vehicle, and then firmly press the brake pedal to switch the Auto Hold function from Standby to the Parking state. The Auto Hold will exit the parking state if the brake pedal is firmly pressed again. When the Auto Hold is in the parking state, it will exit the parking state according to the slope if D or R gear is selected and the accelerator pedal is pressed.

3. Press Auto Hold button on the central screen again to disable the function.

Note: If the vehicle is stopped by firmly pressing the brake pedal, the Auto Hold function will directly enter the parking state.

Auto Hold will exit the parking state when the EPB switch is pressed with the brake pedal pressed.

Auto Hold will exit the parking state under some circumstances such as releasing the seat belt, turning off the power system, remaining static for a length of time or touching the Auto Hold switch. At this time, the EPB will be applied.

Hill Hold Control (HHC)

Warning: It is impossible for HHC keep the vehicle in a standstill state under all circumstances (e.g. slippery ground, snow and ice, etc.) when going uphill. The driver must always pay attention to the vehicle conditions.

Warning: With the HHC in action, the driver is strictly prohibited from leaving the vehicle, otherwise serious accidents may occur.

Warning: During a hill start under a stop-and-go road condition, please press the brake pedal strongly for several seconds before each start.

HHC assists the driver by holding the vehicle during hill starts. If the driver releases the brake pedal, the HHC will hold the vehicle stationary for a short time.

HHC will be activated when the following conditions are met at the same time:

1. Close the driver side door and fasten the seat belt.

2. The vehicle is steadily brought to a stop on a slope.

3. SCS is fault free.

4. EPB is released and fault free.

5. The vehicle is READY mode.

6. The vehicle is in D or R gear.

7. Sufficient force has been applied to the brake pedal before start-off.

Note: When the vehicle is reversing upward on the slope, the HHC also works.

Emergency Hazard Warning Strobe (HAZ)

If the driver makes an emergency braking manoeuvre and certain conditions are met while driving, the brake lamps will automatically strobe to alert the drivers behind, thereby reducing the chances of rear-end collisions.

Note: With the hazard warning lamps turned on, the hazard warning strobe (HAZ) will not function.

After the HAZ is activated, when the emergency braking manoeuvre is exited, the HAZ will be switched off after a few seconds.

Note: If the vehicle speed is less than 10 km/h when the brake light strobe stops, the hazard warning lamps will illuminate automatically. Short press the hazard warning lamp switch or increase the speed to above 20 km/h for more than 5s to turn off the hazard warning lamps.

Auxiliary Brake System

The auxiliary brake system consists of an Electronic Brake Force Distribution System (EBD) and Electronic Brake Assistance System (EBA).

The EBD system can automatically distribute the braking force between the front and rear axles, so that the vehicle can have good braking performance under different load conditions.

When the brake pedal is pressed for emergency braking, the EBA will increase the braking force applied on each wheel while assisting the driver in quickly triggering ABS, thereby shortening the braking distance.

Intelligent Comfort Braking System (ICS)

When the vehicle is about to stop, an experienced driver will slowly release the brake pedal to gradually reduce the speed, and then press the brake pedal again to stop the vehicle when the speed drops to the minimum, thereby avoiding 'vehicle dive' to improve braking comfort. If the ICS is turned on, the driver can realise a comfortable braking effect simply by keeping the pedal application unchanged.

This function is enabled by default after power-on, and you can disable it on the central screen.

Multi-Collision Brake System(MCB)

The MCB function will automatically apply the brakes to reduce the vehicle speed and improve the vehicle stability after a collision. It is designed to reduce the risk of a secondary collision caused by the uncontrolled movement of the vehicle after a collision.

The MCB will be activated when the following conditions are all met at the same time:

- A vehicle collision where airbags are deployed;
- The vehicle speed is less than 37 mph (60 km/h);
- The steering wheel has not been turned in excess of 180°;
- SCS is fault free.
- The accelerator pedal is not fully applied.

If the driver presses the accelerator pedal firmly after the MCB function is triggered, the system will exit the braking state.

Note: The MCB function cannot decelerate the vehicle in all cases of collision due to the fact that the collision process may cause some parts to malfunction or fail and affect the normal operation of the function.

Hill Descent Control (HDC)

Warning: HDC is just an auxiliary function, and cannot ensure the vehicle drives down a steep slope at a low speed in all conditions, such as slippery ground, snowy road surface or steep slope, etc.

Warning: Even when HDC is in use, the driver still has to pay close attention to the driving state of the vehicle, and take active control when necessary. Because in certain cases, HDC may exit from the operating state temporarily.

Warning: Under some driving conditions on downhill surfaces (e.g. driving down a slope with high speed, small slope, etc.), HDC is inoperative, in this case the driver will be required to control the speed by pressing the brake pedal to ensure safe driving.

The HDC system is an auxiliary function designed for vehicles running on acute downhill surfaces. It reduces the speed by applying the brake force, thus assisting the driver to drive on acute downhill surfaces smoothly.

Note: When the HDC is working, it is normal for the brake system to generate slight vibration or working noise.

Note: When the HDC is working, do not shift to N gear, since this operation will deactivate the HDC function.

HDC is off by default. After the vehicle is powered on, the function can be enabled on the central screen. HDC system has four states as follows:

1. Standby: Touch the HDC button to enable the function and enter the standby state.

2. Operating: In Standby mode, when the vehicle drives on the acute downhill surface at low speed, if the driver does not press the brake pedal or the accelerator pedal, HDC automatically enters the Operating state. Meanwhile it may be accompanied by the working noise of the brake system, and the vehicle drives down the acute downhill surface smoothly.

3. Temporary Deactivation: Press the accelerator pedal or brake pedal to a certain extent whilst in the Operating state, HDC will temporarily remove itself from the operating state.

4. OFF: Disable the function on the central screen.

Note: When the vehicle steers at a fast speed on the hill with a certain gradient, HDC may switch from Standby Status to Operating Status.

Digital Video Recorder (DVR)

Instructions for Use

1. Keep the windscreen area around the camera lens clean to ensure the quality of video recording.

2. In bad weather (such as rain, snow, fog, smoke, dust, haze, frost, etc.), when visibility is low, the quality of recorded image may deteriorate.

3. DO NOT operate the digital video recorder (DVR) whilst traveling. It is illegal to watch any form of video whilst driving, this will effect driving safety.

4. DO NOT use the DVR for excessive amounts of time when the vehicle is not powered on, the battery may become flat and you will not be able to start the vehicle.

5. DO NOT insert/remove the memory card whilst in use, otherwise the videos may be lost or the memory card may be damaged.

6. When the memory card contains excessive data, resulting in insufficient capacity, the read/write rate may decrease. It is recommended to back up data and format the card via the head unit.

7. If there is excessive user data (not used by DVR) in the memory card, the DVR may not recognize the card. This DVR is compatible with a high speed Micro SD card, and the recommended capacity is 64GB and above.

Overview

The vehicle is equipped with a digital video recorder (DVR), the DVR camera is installed in the multi-function sensor cover of windscreen. The system records all images of the vehicle on the road, and can provide the image data in a quick, true and accurate manner to assist the traffic police in dealing with traffic accidents fairly, justly and reasonably, and protect the rights and interests of drivers from being infringed.

The information recorded by the camera is stored on a memory card, which needs to be inserted into the memory card jack next to the front console power socket to support the DVR function.

The system supports the real-time monitoring of the health state of the memory card. Click the Settings icon in the upper right corner of the DVR interface on the central screen to enter the Settings interface, where you can format the SD card, enable and disable the DVR.

Note: When using a memory card for the first time, please format the card using the head unit.

Loop Recording

When the vehicle is powered on, the system will automatically start high-definition loop recording, and overwrite the earliest videos after a period of time.

Live Preview

Touch [DVR] on the central screen to view the live preview.

Note: There may be a slight delay in preview and playback.

Emergency Recording

In the event of an emergency, a 12-second video will be captured into a separate video file and saved under the Emergency Video tag.

Intelligent Drive System*

Instructions for Use

Pay attention to the "NOTE", "REMINDER" and "WARNING" symbols in this handbook, and follow the instructions carefully to avoid injury or damage. These symbols are defined as follows:
NOTE: Items refer to guidelines related to vehicle operation.

REMINDER: Items that must be observed to facilitate vehicle maintenance and use.

WARNING: Items that must be observed to avoid damage to the vehicle and to ensure personal safety.

In this handbook, “you” refers to the driver only.

Certain features are only available on specific vehicle configurations or in selected market regions. Options or features described in this handbook do not guarantee their availability for your particular vehicle.

Intelligent Drive Cameras and Radar

Driver Assistance Cameras

The vehicle is equipped with the following cameras: surround-view camera and periscopic-view camera.

- The periscopic-view camera provides detection information for the driver assistance system.
- The surround-view camera provides detection information for the parking system.

The camera recognizes targets in visual form, providing recognition information for relevant functions after recognizing the targets around the vehicle.

Installation Position of Cameras

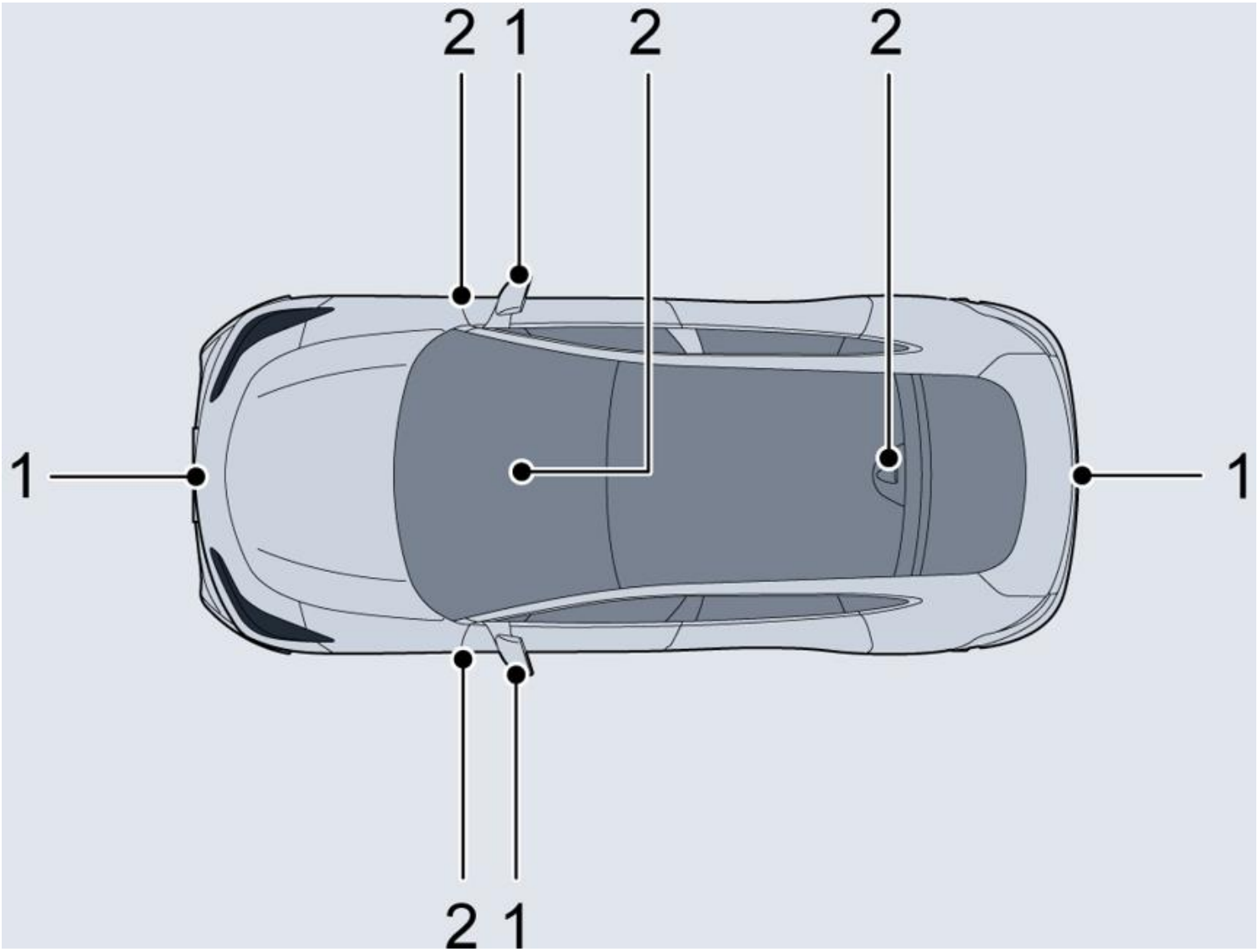

1. Surround-view camera

2. Periscopic-view camera

Driver Assistance Radar

The vehicle is equipped with two types of radar: ultrasonic sensor radar and millimeter-wave radar.

- The ultrasonic sensor radar provides detection information for the parking system.
- The millimeter-wave radar provide detection information for the driver assistance system.

The radar is only used to detect targets around the vehicle, providing detection information for relevant functions.

Installation Position of Radars

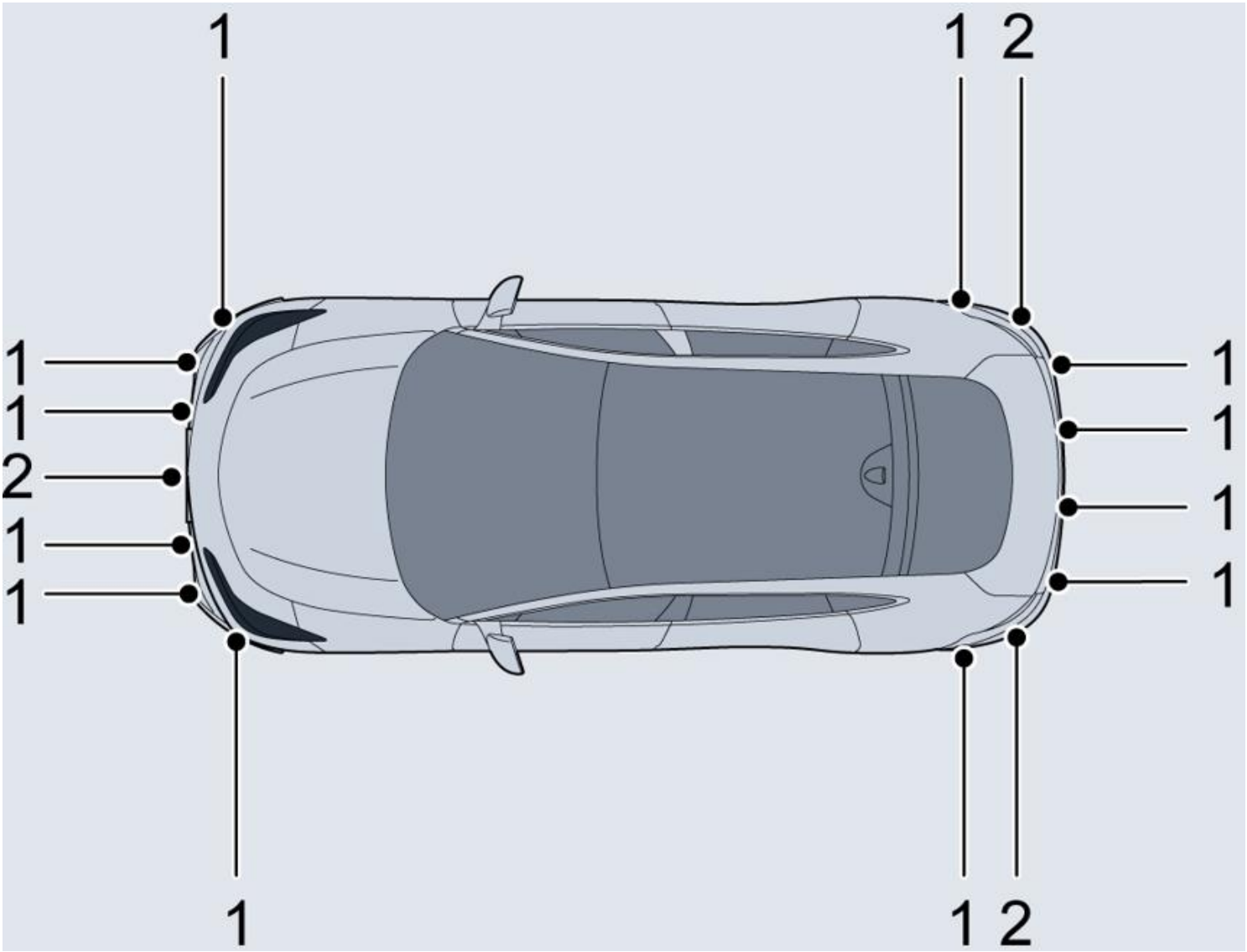

1. Ultrasonic radar

2. Millimeter-wave radar

Maintenance of Camera and Radar

Camera Maintenance

To ensure the normal operation of the camera, keep the camera clean and free of foreign objects such as snow, ice, water, and dust.

To ensure the normal operation of the camera, keep the windscreen in front of the camera clean and remove any objects blocking the view between the camera and the windscreen.

Remove any objects from the camera lens using a soft cloth or wash with water (low pressure). Do not flush the camera with high pressure water, or clean the camera with abrasive or sharp objects.

Radar Maintenance

To ensure the normal operation of the radar, keep the radar clean and free of foreign objects such as snow, ice, water, and dust.

Remove any objects from the radar surface using a soft cloth or wash with water (low pressure). Do not flush the radar with high pressure water, or clean the radar with abrasive or sharp objects.

When wrapping, or applying film to the vehicle, it is necessary to remove the film from the surface of the camera, ultrasonic radar, millimeter-wave radar, as well as the probe of the radars.

Precautions of Driver Assistance

Driver assistance functions refer to a suite of driver assistance features that are intended to make driving safer. None of these features makes the vehicle fully autonomous or replaces you as the driver.

The camera and radar cannot work normally in all driving situations or traffic, weather and road conditions.

When the vehicle is in a complex or poor environment, you should drive cautiously and always be responsible for driving safety.

Ensure all cameras and radars are clean and free of obstructions before each drive and before using driver assistance functions, and please refer to "**Maintenance of Camera and Radar**" for more details.

The front and rear millimeter-wave radars are installed in the front and rear bumpers, respectively. Therefore, to avoid affecting the performance of the millimeter-wave radars, it is strictly prohibited to paint, retrofit and encircle the bumper.

When the instrument panel displays warning messages such as Driver Assistance Fault Light, AEB Fault Light, Radar Obstruction Detected, or Radar Temporarily Unavailable, please inspect and service the radar system in a timely manner. The specific alarm formats may vary depending on the actual vehicle status.

When the camera system malfunctions or is not calibrated, the dashboard will remind the driver through visual and auditory alerts. The driver needs to contact after-sales service in a timely manner for repair. The specific alarm formats may vary depending on the actual vehicle status.

REMINDER

Calibration of Visual Camera

The visual camera must be re-calibrated in the following situations:

- The visual camera is removed/installed;
- Any parts that make up the visual camera assembly are removed/installed, such as the left and right rearview mirrors, front and rear bumpers, wing molding assembly, etc

The visual camera must be calibrated by trained personnel using special tools. Please contact an Authorized Repairer when calibration is required.

Calibration of Millimeter-wave Radar

The millimeter-wave radar must be re-calibrated in the following situations:

- The radar has a maladjustment failure, for example the position of the forward detection radar has changed;
- The radar or radar bracket is removed/installed;
- The front anti-collision beam is removed/installed;
- The four-wheel alignment parameters have changed.

Note: If the radar suffers from strong vibration or slight impact, its installation position needs to be checked and re-calibrated if necessary.

Note: The radar must be calibrated by trained personnel using special tools. Please contact the Authorized Repairer when calibration is required.

WARNING

In the following situations, the detection performance of the visual camera will be affected:

- Driving in bad weather, such as heavy fog, heavy rain, heavy snow, dust, sand storm, etc. which cause visibility reduction;
- Affected by the light, such as: in the night and under poor auxiliary lighting, backlighting in the view, direct light from the oncoming vehicles, quick bright/dark light level changes (tunnel entrance/exit), driving on a strong reflective road surface (wet or snow covered roads), in the tunnels, buildings, etc.;
- The car drives in places with insufficient light, such as: in the evening, at night, a tunnel, building, underground parking lot, etc.;
- The camera is partially or fully blocked by the obstacles, such as foreign objects, oil stains, dust, mud, snow, rain, frost or splashed water, etc.;
- The windscreen in view of the front view camera is damaged:
- The camera is not calibrated after removal/installation;
- The camera is not secured in place.

The radar detection performance will be affected in the following cases:

- When the radar is covered by mud, snow, heavy rain or water spray;
- When the front and surrounding areas of the radar are covered by such objects as labels or auxiliary lighting devices:
- When the radar is subject to strong vibration or slight impact;
- Some targets may affect and weaken the detection of the radar, such as road fences and tunnel entrances;
- When the radar is affected by the environment, such as under electromagnetic field interference or due to the target itself;
- Radar signals that are strongly reflected (e.g., in multi-storey car parks, tunnels, water jets from sprinklers, etc.) may degrade the function of the radar sensor;
- Due to the limitations of radar target recognition characteristics, in extremely rare special cases, it may generate false alarms for metal guardrails, green belts, cement walls, traffic signs on high-speed and elevated roads, and high-speed crash barrels.

Note: Any snow on the radar should be removed with a brush, ice should be removed with deicing spray.

Note: Never knock the radar, for example, bumping into the radar when moving the car, this may cause displacement or damage.

Parking Assist System

Parking Assist System

During vehicle parking, the parking assist system detects obstacles by ultrasonic radars, and prompts the driver with the proximity of obstacles.

The ultrasonic radars on the front and rear bumpers monitor the front and rear areas of the vehicle to search for obstacles. If an obstacle is detected, the system will calculate its distance from the vehicle and warn the driver to avoid the collision with a warning tone.

NOTE: The radar warning tone can be turned on and off through the 360 AVM Settings interface.

When the vehicle is traveling at a speed of less than 15 km/h, the parking assist system automatically starts to work. When a rear obstacle is detected, the driver screen will display the distance of the vehicle from the obstacle to remind the driver. The system will be automatically turned off when the speed exceeds 15km/h.

When the vehicle is in non-P gear state, the parking assist system will automatically activate.

When vehicle is stationary, the parking assist system will also continue to be turned on.

If selecting R gear, the parking assist system function will be automatically turned on.

REMINDER: After R gear is selected, if the ultrasonic radar fault message pops up on the driver screen, it indicates a system failure, please contact an Authorized Repairer for service.

With the parking assist system function enabled, if an obstacle is detected, the system will give warning sounds in different frequencies. (There might be blind zones, please refer to "**Important Instructions for Using Parking Assist System**" for more details)When radar warning tone is turned off, the system will not give warning sounds.

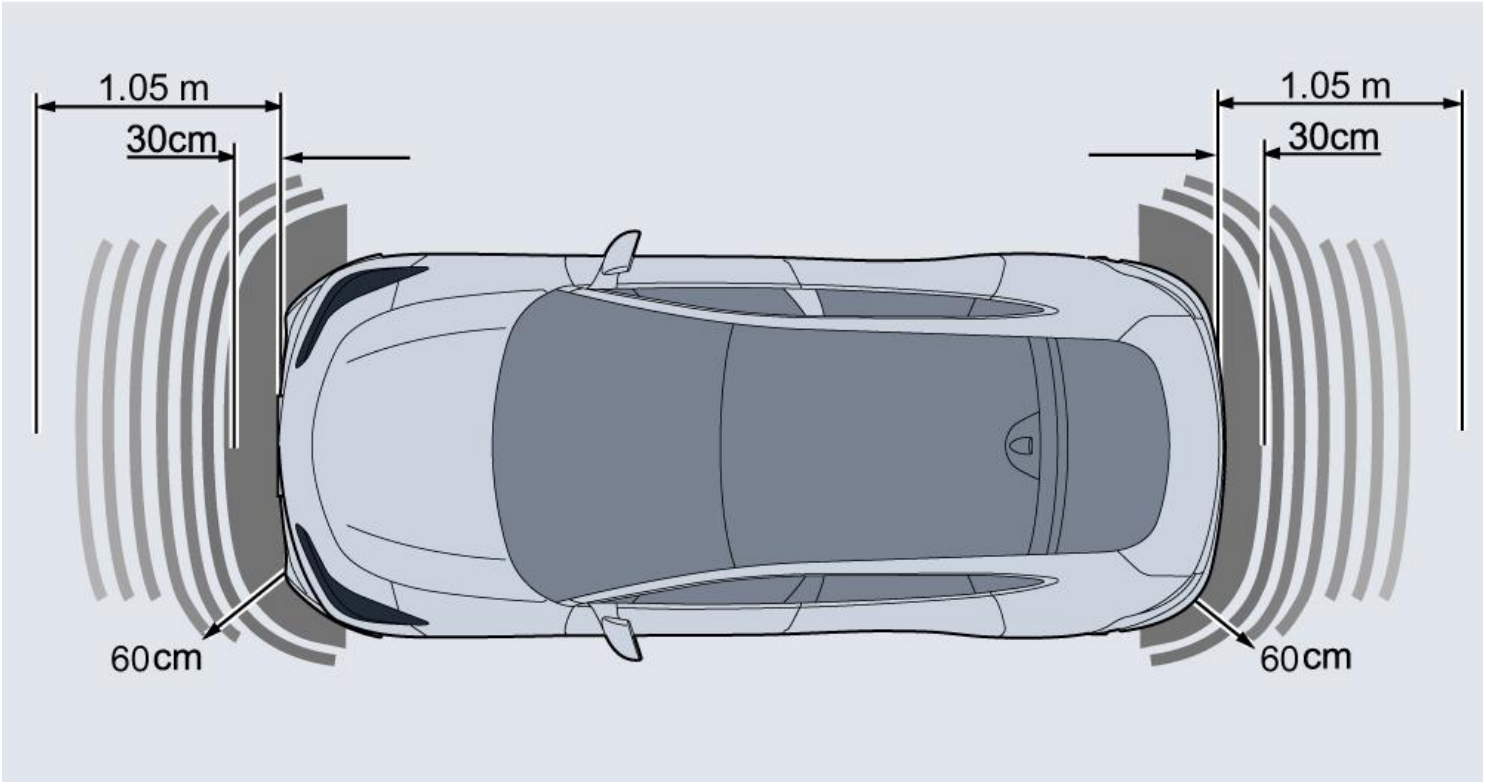

- If an obstacle is detected within 105 cm from the rear of the vehicle or within 60 cm from the corner of the vehicle, the warning sound commences. As the car moves closer to the obstacle, the warning sounds are transmitted more rapidly.

- If an obstacle is detected within 105 cm from the front of the vehicle or within 60 cm from the corner of the vehicle, the warning sound commences. As the car moves closer to the obstacle, the warning sounds are transmitted more rapidly.

- Once the obstacle is within 30 cm of the front and rear bumpers, the warning sounds will merge into a continuous sound. If both the vehicle and the obstacle are stationary, the warning sound will stop 3s later.

REMINDER

The assist warning sound is only recommended to be turned off when it is clear that the surrounding environment does not require the sound, and when you manually turn off the assist warning sound, you do so at your own risk.

The parking assist system function will be deactivated when the vehicle speed exceeds 15 km/h or the transmission is shifted to P gear.

When the parking assist system malfunctions, the interactive interface will display pop-up alerts such as "Radar Temporarily Unavailable" or "Parking Assist System Fault" to notify the driver.

When your car is not in R gear, you can also grab the center control screen with your finger or click the close button on the interactive interface to actively exit the parking image.

Important Instructions for Using Parking Assist System

WARNING

The purpose of the parking assist system is only to assist the driver during parking!

The parking assist system cannot replace the driver's observation and judgment. The driver must keep control of vehicle at all time and drive carefully and is fully responsible for the vehicle.

The ultrasonic radar may not be able to detect certain types of obstacles, such as thin posts, small objects close to the ground, objects above the tailgate and some objects with low reflectivity.

Due to the different material, shape and reflectivity of obstacles, the ultrasonic radar may provide inaccurate measurement distance, it may miss alarms or provide false alarms, therefore, it only serves as a driver assistance function and cannot be completely relied on when used.

When the speed exceeds 5 km/h, the output distance of ultrasonic radar may be delayed, please drive safely.

0-200 mm is the blind spot range of the parking assist system. If the distance between the vehicle and the obstacle is in the range of 0-200 mm, the detection and alarm prompts of ultrasonic radar may be inaccurate. Please observe and drive carefully.

Image Assist

360 Around View Monitor (AVM)

With the 360 around view monitor (AVM) system working, the driver interface will display a 360 around view of the vehicle to facilitate the observation of surrounding environment and make the driving environment much safer.

NOTE: You can touch buttons on the display to view images from different perspectives around the vehicle.

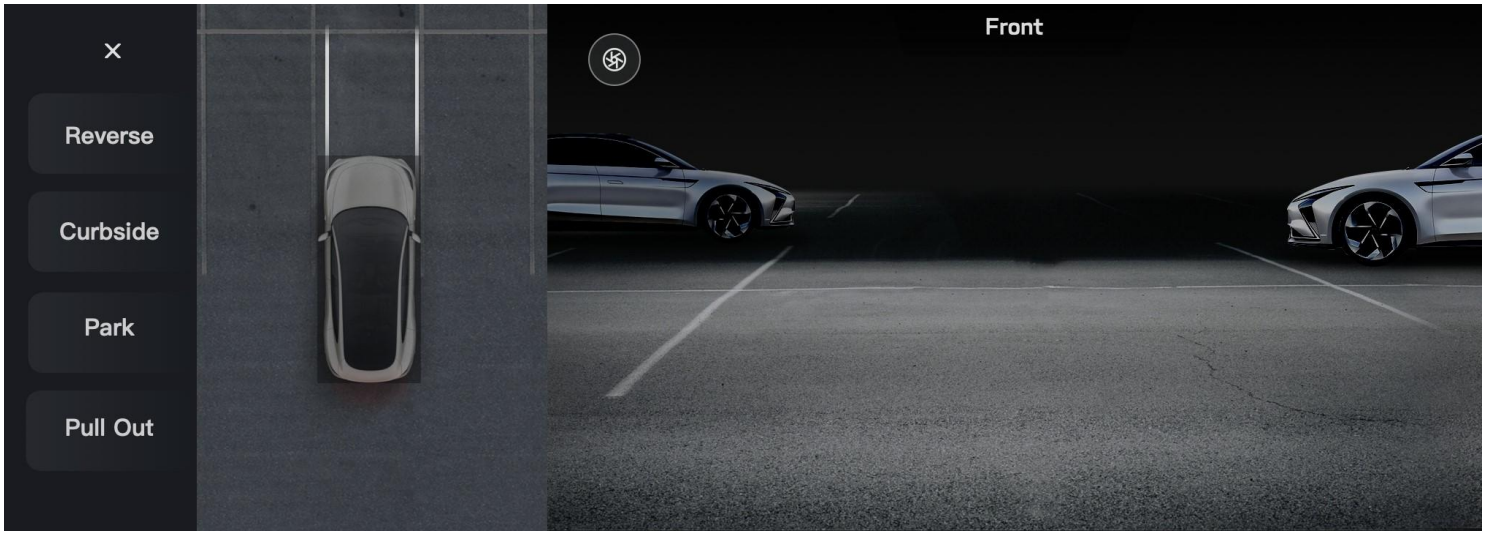

NOTE: When the speed is less than 20 km/h and not in R gear, you can enter the 360 AVM system in the following ways:

- Select R gear;
- Turn on the 360 soft switch on APPlist;
- If the 360 shortcut has already set, use the steering wheel switch to enter 360 AVM mode.
- Power the vehicle and enable the 360 AVM using the Settings option in the centre display, with the vehicle powered on shifting to D for the first time will activate the 360 AVM.

NOTE: When the vehicle is not in R gear and the parking function (One Touch Park, One Touch Escape, One Touch Side, or One Touch Reverse) is not activated, the 360 around view function will exit in the following situations:

- Press the home button or the 360 close button.
- Driving speed is greater than or equal to 20km/h.
- Within 6 seconds after shifting to P gear, the driver did not operate the 360 display area.

REMINDER

When the parking function (One Touch Park, One Touch Escape, One Touch Side, or One Touch Reverse) is activated, 360 around view is not allowed to be turned off.

When the vehicle is in R gear, 360 around view is not allowed to be turned off.

Whilst in the D position the 360 AVM cannot be enabled when the vehicle speed is above 12 mph (20 km/h).

WARNING

360 AVM system uses wide-angle fisheye cameras, so the object on the display screen may appear somewhat deformed in comparison with the actual object.

360 AVM system is only to be used for parking/driver assistance. It is not safe to rely solely on this system to park or drive the vehicle, because there are some blind spots in front of and behind the vehicle. The surroundings of the vehicle should be observed in other ways during the parking/driving process, so as to avoid accidents.

When the 360 AVM system is used for parking/driving, please ensure that all the car doors are closed.

The distance to an object displayed on the 360 AVM system may be different from the distance perceived subjectively, especially when the object is closer to the vehicle. Please assess the distance in various ways.

Please make sure the cameras are unobstructed. To prevent affecting camera performance, please avoid spraying directly on the cameras when washing the vehicle body with high-pressure water. Please wipe any water or dust off the camera in time.

Please protect the cameras from any impact to prevent damage or malfunction.

In the 360 AVM Display interface, you can personalise the settings for the relevant system functions.

The transparent chassis of 360 AVM is a technology that makes the image collected by the camera in advance display a transparent effect after technical processing, this is transmitted to the entertainment display, which is convenient for the driver to see the road conditions under and around the car.

The transparent chassis of 360 AVM can be switched on or off by the settings of 540° surround camera.

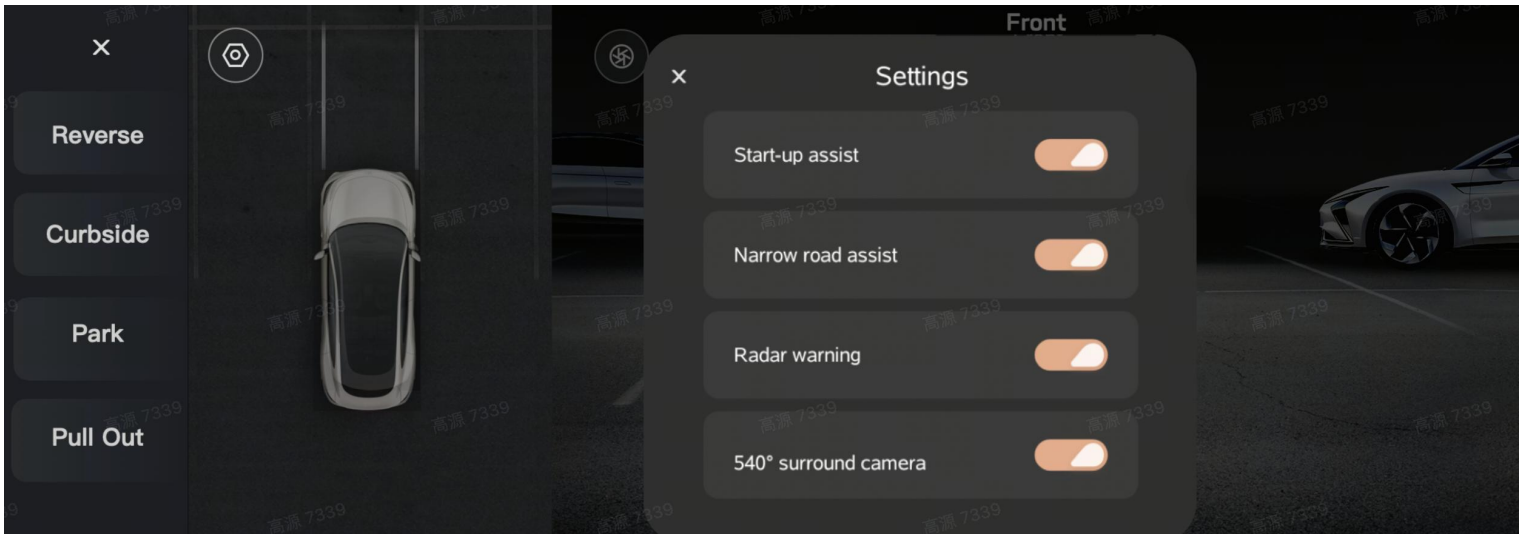

REMINDER

The transparent chassis of 360 AVM cannot recognize the possible changes beneath the vehicle when the vehicle is stationary. Please drive with caution when using this function, and pay attention to actual environment to avoid damage to the vehicle.

WARNING

The transparent chassis of 360 AVM is only used to assist in observing the area under the vehicle during parking/driving. Investigation of foreign objects and hazardous conditions under the vehicle should be done in other ways to ensure personal safety.

When the vehicle runs at a low speed, the transparent chassis of 360 AVM will be affected by speed fluctuation or multiple stops, so there will be misalignment between the images below the vehicle and that outside the vehicle.

Blind Spot Detection

Rearview Blind Spot Detection

The rearview blind spot detection function transfers the images taken by the camera directly behind the vehicle to the driver screen to provide a wider and clearer field of vision than interior rearview mirrors.

NOTE: The function is enabled by default and can be activated or deactivated by scrolling the wheel on the right side of the vehicle's steering wheel upwards or downwards. The display duration of rearview blind spot image can be set in Central Screen - Vehicle Settings - ADAS.

As an upgraded function of blind spot detection, intelligent rearview blind spot detection can be automatically triggered in the following scenarios:

- Automatic emergency braking is triggered;
- The backward expression function of Digital Light Processing is enabled (giving a like, making a finger heart, etc.).

WARNING

The Rearview Blind Spot Detection cannot be displayed in the following scenarios:

- Around View Monitor is enabled;
- In Super Energy Saving Mode;
- The vehicle has just been powered on.

Side Blind Spot Detection

Side Blind Spot Detection assists drivers in timely understanding the road conditions behind the vehicle and reduce lane changing collision accidents caused by blind spots.

Turn on the side blind spot detection function switch, use the direction indicator switch to select a side, when the speed is below 150 km/h, the driver screen will display the real-time image of the blind spot behind the selected side.

When the steering wheel is turned back or the turn signal is turned in the opposite direction, the side blind spot image will disappears.

WARNING

The side blind spot image cannot be displayed in the following scenarios:

- Around View Monitor is enabled;
- In Super Energy Saving Mode;
- The vehicle's speed exceeds 150 km/h;
- The vehicle has just been powered on.

Intelligent Pillar A Blind Spot Detection

This feature assists drivers in promptly grasping the road conditions within the A-pillar blind spot of their vehicles, thereby minimizing lane-changing collision accidents resulting from blind spots.

Turn on the intelligent Pillar A blind spot detection function switch, use the direction indicator switch to select left turn when the speed is below 20 km/h, and the left driver screen will display the real-time image of the front left blind spot.

When the steering wheel of the vehicle is turned back or the turn signal is turned in the opposite direction, the function will automatically exit.

WARNING

The Pillar A blind spot image cannot be displayed in the following scenarios:

- Around View Monitor is enabled;
- In Super Energy Saving Mode;
- The vehicle's speed exceeds 20 km/h;
- The vehicle has just been powered on..
- While the blind spot detection system provides assistance in monitoring blind spots of rearview mirrors, it cannot replace the driver's observation and judgment. The driver must keep control of vehicle at all time and drive properly and is fully responsible for the vehicle.
- The driver must ensure the normal operation of the blind spot detection system and keep the cameras and other sensors in good condition. For example, dirt, snow, or other obstructions need to be cleared right away.
- The image quality of blind spot detection system depends on weather conditions and lighting. The blind spot detection system may have problems such as not displaying images or displaying unclear or incomplete images at night or during sunrise/sunset, rain, fog, clouds, snow, or dust, or when the vehicle is backed up towards a light source, or when there is a sudden change in lighting.

Dynamic Zone Tracking(DZT)

The Dynamic Zone Tracking(DZT) function can quickly identify pedestrians or non-motorized vehicles at risk in the right turning area and mark them with a red box in the blind spot image. It can especially help you judge the risk in the blind spot when driving at night and visibility is poor.

Function activation: You need to activate the side blind Zone image function first, and then turn on the Dynamic Zone Tracking(DZT) function switch.

Note: Dynamic area tracking objects are only triggered in the right blind spot area, and the dynamic area tracking function is automatically exited when the vehicle speed exceeds 30km/h.

WARNING

Under some circumstances, it is difficult for the blind spot detection system (including Rearview Blind Spot Detection, Side Blind Spot Detection, Intelligent Pillar A Blind Spot Detection) to assist the driver, and detection may be affected or delayed. Possible circumstances include, but are not limited to:

- Vehicles coming from behind change the lane suddenly.

- Vehicles coming from behind are detected too late at places such as sharp turns and slopes.
- The target vehicle is obscured.
- Vehicles come from behind at a relative speed above 80 km/h.
- The vehicle is on a curve which is too sharp, or is entering or exiting a curve.
- The vehicle is running under severe weather, such as rain or snow.
- Rear corner camera come off, are loosely installed, or are blocked.
- The vehicle encounters certain metal, guardrails or similar road conditions.
- Targets that may not be responded include, but are not limited to, pedestrians and animals.
- The environment contains electromagnetic interference or other influences.
- Vibration or collision influence on sensor calibration of cameras can degrade system performance.
- If this is detected, please contact an Authorized Repairer for service.

While the blind spot detection system provides assistance in monitoring blind spots of rearview mirrors, it cannot replace the driver's observation and judgment. The driver must keep control of vehicle at all times and drive properly and is fully responsible for the vehicle.

The driver must ensure the normal operation of the blind spot detection system, keeping the cameras and other sensors in good condition. For example, dirt, snow, or other obstructions need to be cleared right away.

The image quality of blind spot detection system depends on weather conditions and lighting. The blind spot detection system may have problems such as not displaying images or displaying unclear or incomplete images at night or during sunrise/sunset, rain, fog, clouds, snow, or dust, or when the vehicle is backed up towards a light source, or when there is a sudden change in lighting.

Important Instructions for Using Image Assist

WARNING

The image assist system only plays a role of assistance! The camera has a limited field of view and the display is limited, it CANNOT detect obstructions outside the field of view.

ways continue to pay attention to the current actual road conditions for your driving safety.

Auto Park Assist(APA)

One Touch Park

One Touch Park can assist the driver in automatically parking the car into a parking slot recognized by the system that has lines on the ground or is unoccupied beside any car.

The system supports an intelligent parking-in function for perpendicular or parallel parking slots. If the parking slot has a clear marking line and enjoys good lighting conditions, the system can also complete the detection of the parking slot without using reference objects on both sides of the parking slot.

If a fault or a system failure is detected, the system function is unavailable, and the vehicle will give a corresponding prompt.

System Operation

During parking, please follow the prompts on the central screen. Make sure the following conditions are met before parking:

- No system fault or failure is detected;
- All doors, bonnet and tailgate/boot are closed.

One Touch Park Operation

Quickly activate the One Touch Park function through the following methods, and the system will start searching for parking spaces:

- Method 1: Click the "One Touch Park" button in the 360 interface to quickly start and enter the One Touch Park interface.
- Method 2: Click the "One Touch Park" button on the HOME interface of the central screen to quickly start and enter the One Touch Park interface.
- Method 3: Click the "One Touch Park" button on the intelligent panel of the central screen to quickly start and enter the One Touch Park interface.
- Method 4: Set the function of the steering wheel custom button in the settings menu -> general to intelligent parking, and long press the button on the right side of the steering wheel to quickly start One Touch Park.

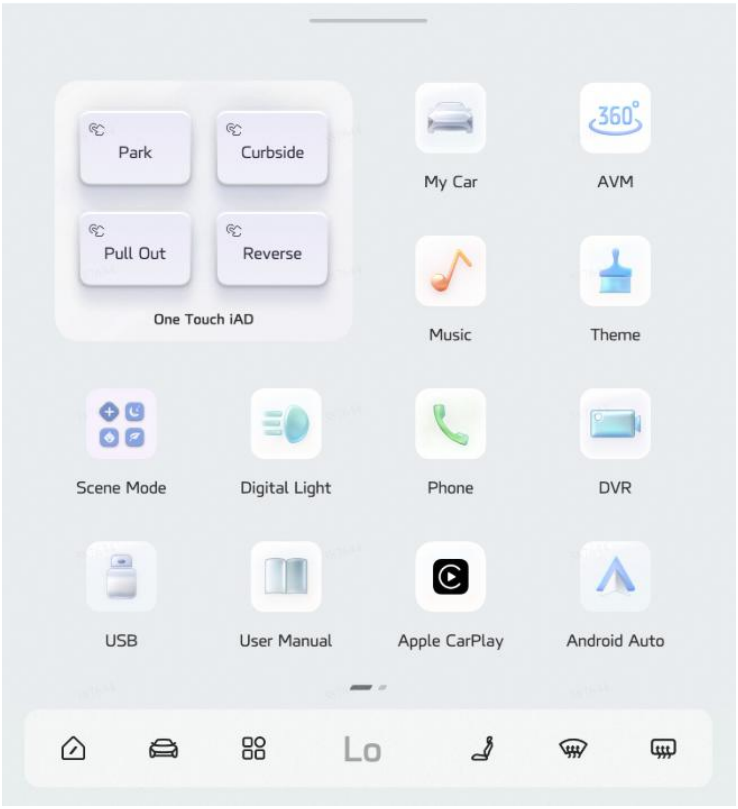

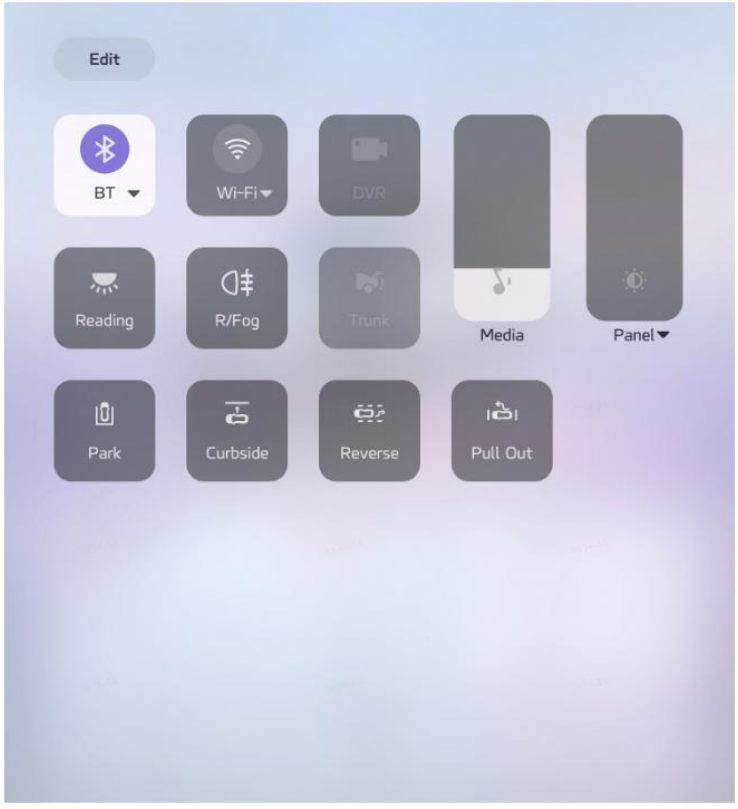

Parking-in Operation

1. When the speed is below 20 km/h, enable the automatic parking assist function through the "One Touch Parking" in the main interface of the central screen, and the system begins to search for a parking slot.

2. After a parking slot is identified, you should press the brake pedal to stop the car safely. You may then select the parking slot as needed on the central screen, and start automatic parking after confirmation.

3. The system prompts successful parking.

REMINDER

After pressing "Start Parking", please do not release the brake pedal until the system prompts "Please Release Brake".

After the system identifies a parking slot, if the vehicle is driven out of range, the system will search for a parking slot again.

Interruption or Exit

- During the parking process, if you open the door, the system will be temporarily suspended; after the door is closed, you may operate on the central screen to resume parking.
- During the parking process, if you intervene by braking, the system will be temporarily suspended; after the brake is released, you may operate on the central screen to resume parking.
- In the process of searching for parking slots, when the speed is above 25 km/h, the system will skip to the One Touch Park main interface.
- During the parking process, if you intervene with the steering wheel, the system will exit.

- During the parking process, if you intervene by changing gear selection,, the system will exit.
- During the parking process, if there are any other abnormalities, the system will exit.

After the function is activated, if system intervention occurs, the vehicle's dual flash will turn on and corresponding prompts will be given on the interface. After the function is exited, the vehicle will automatically brake and shift to P gear, and the reason for exiting will be prompted.

REMINDER

The system prompt messages are individual to the type of vehicle.

Before and during the use of the one-touch park function, the driver should pay attention to the relevant prompts on the vehicle side.

Instructions for Using One Touch Park

WARNING

You should understand that this system is only designed to assist the driver in parking, and the driver is still the main operator, and should strictly use the one touch park function in accordance with the relevant instructions and comply with applicable national and local traffic safety regulations, and be responsible for the safety of the entire parking process.

You should judge the use of the system based on the overall environment (such as weather, geographical environment, etc.), and assume the corresponding responsibility for your judgment. When the one touch park function terminates abnormally, take control of the vehicle immediately.

The one touch park function is only a combined driver assistance system, and the driver is responsible for driving the vehicle and bears full responsibility for safe driving of the vehicle. This function can assist the driver, but cannot replace the driver in driving. When choosing to use this function, due to limitations in system detection and control, it is not possible to handle all traffic, weather, and road conditions.

The driver is responsible for driving safety and needs to always hold the steering wheel, observe the road conditions, pay attention to the surrounding environment of the vehicle, and be ready to quickly take over the vehicle in case of danger. Do not rely on this function to control the vehicle; otherwise it may cause accidents or personal injuries.

The one touch park function cannot handle all parking spaces, including but not limited to mechanical garage. Please do not rely on this function to control the vehicle.

When using the function, the exterior rearview mirror should remain unfolded, and the four cameras on the front, back, left, and right should be in normal working condition.

Surface contamination or obstruction of the camera can affect its perception ability, resulting in the inability to recognize parking spaces. Please clean the camera in a timely manner.

The performance of the system depends on the detection and recognition ability of the ultrasonic sensor and panoramic image camera for the environment. When using the function, the driver must be in the driver's seat and needs to monitor the vehicle safety in real time. If necessary, take over to ensure the safety of the vehicle and its surroundings.

WARNING

Before and during the use of one touch park function, you should ensure that the vehicle meets the requirements for using the function, including but not limited to:

- You should ensure that the system is used in good lighting conditions, suitable weather conditions, on a road with no significant slope, complies with the requirements for safe driving and has sufficient electricity. When the system is in use, the exterior rearview mirror should be kept unfolded, and the front, rear, left and right cameras are in a normal working state.
- Keep the rearview mirror unfolded when using the function to ensure that the left/right camera correctly identifies the marking line.
- If the surface of the camera is stained or blocked, the perception capability will be affected, resulting in failure to identify parking slots. Please clean the camera as soon as possible.
- If no parking slot can be found, please drive as close to the parking slots as possible to identify a parking slot faster.
- You must always check and confirm that the parking slots identified by the system are safe and suitable for parking, and never fully rely on the system to find a suitable parking slot. The system may misidentify a parking slot on the road, at the entrance of the passageway, in bushes, etc., in which case you have to determine the rationality of the parking slot. The system cannot determine whether the parking slot found is legal or not, thus you have to confirm that the parking slot is legal before starting the parking process.

- The system only displays the parking slots that the vehicle will be able to park in according to its capability. The availability of parking will vary with the environment, not just with the size of the parking slot. If an obstacle suddenly appears around the vehicle during parking, please take take control immediately, because the system may not be able to brake in time.

- Due to the surrounding environment, the system may complete the parking prematurely, it remains your responsibility to adjust the vehicle position appropriately.

- Always be aware of collision risks, especially for surrounding trees, iron poles, fire hydrants, fire hydrant pipes, stone piers, low steps or stools, low curbs, protruding objects on surrounding vehicles or open doors, roadside fences, flower pots & plants, flowerbed bushes, overhangs, overhanging warning lines and other unrecognized obstacles in order to avoid collision.

- If the luggage racks or bicycles and other objects are placed on the roof, please pay attention so as not to collide with overhead objects (such as A/C ventilation pipes, etc.) during use.

- During automatic parking, the driver can judge the distance information of obstacles through the parking radar assist alarm function to avoid collision risks.

- Although the system has the ability to automatically pause to avoid obstacles, due to the limitations of the sensor, you should maintain an intense concentration to observe obstacles, pedestrians, vehicles and other potential threats around the vehicle, and be ready to brake to avoid vehicles, pedestrians and objects. The manufacturer assumes no liabilities for any accidents, bumps, scratches, etc. due to sudden changes in the surrounding environment or the driver's non-compliant operations.

- Do not use One Touch Park if anything, such as a ball hitch, bike rack, or trailer, is attached to the tow hitch.

- If any item (such as a ball trailer hook, bicycle rack, or trailer) is connected to the towing hook, do not use the one touch park function.

- Any additional or modified accessories on the steering wheel: installing a steering wheel cover, modifying the steering wheel, or adding weight rings. Non-original vehicle tires or under-inflated tires will affect the parking trajectory of the one touch park.

WARNING

The following road conditions may cause the one touch park function to not operate as expected, including but not limited to:

- When traveling or attempting to park on a slope, the One Touch Park may not work as expected and you need to use it with caution.

- Do not use the one touch park function if the road surface is uneven or has steps. The one touch park function is designed only for flat roads.

- Do not use the one touch park function if the road surface has water, mud, potholes, ice and snow, speed bumps, or obstacles.

- If the curb material is special or cannot be detected, there is a risk of the vehicle's tires and wheels being damaged by the curb if parked improperly, please take over the vehicle in time.

- When the road is sloping or the gradient exceeds the supported range of the function, the success rate of the one touch park cannot be guaranteed.

WARNING

The following situations may limit sensor operation, which could cause the one touch park to not function or not function as expected, including but not limited to:

- The system performance depends on the ability of ultrasonic sensors and surround view cameras to detect and recognize the environment. The sensors are limited in recognition ability and range, and they cannot recognize obstacles that are suspended, and small in both volume and width. When there are similar objects in the parking environment, please watch out and ensure

that the environment is suitable and safe, and be ready to intervene at any time to take full control of the vehicle to avoid a collision.

- One or more sensors are damaged, misaligned, or blocked (such as by sludge or ice and snow).
- Rain, snow, fog, haze, and other adverse weather conditions affect the performance of sensors.
- Objects with smaller widths such as thin poles, tubes, ropes, car handles, charging cables, water pipes, wire mesh, guardrails, fences, etc.
- Low objects such as stone piers, low stools, low fire hydrants, road edges, construction signs, vehicle barriers, etc.
- Suspended objects such as suspended fire hydrants, fire valves, suspended billboards, parking signs, truck tails, vehicle spare tires, air conditioning external units, suspended steps, ventilation or electrical water conservancy box pipelines, etc.
- Green plants and trees such as flower beds, shrubs, trees near parking spaces, potted plants, etc.
- Floor standing boxes and buckets such as fire extinguishers, garbage bins, cargo boxes, etc.
- Special vehicles, animals or pedestrians such as children, people with short stature/squatting/lying down or covered by other objects, animals, bicycles, tricycles, handcarts, baby strollers, shopping carts, garbage carts, etc.
- Reflective objects, such as glass doors, ground water accumulation, reflective floor paint parking spaces, etc.
- Obstacles that are closely attached to the parking space, such as square pillars in blind spots, iron doors that are closely attached to or partially invade the parking space, unfinished walls, etc.
- Other obstacles, such as conical or surface sloping objects, high sound absorbing objects (such as snow, cotton objects, etc.).
- Irregular objects such as garbage dumps, protrusions on surrounding vehicles, sharp obstacles, etc.
- Pits on the ground, such as potholes, ditches, sunken steps, etc.
- Irregular protruding objects, such as protruding door frames.
- The sensor is affected by other electronic devices or equipment that can generate interference.

WARNING

The following target parking slots may cause the one touch park to not function as expected, including but not limited to:

- When there are obstacles such as open ground locks, cones, shopping carts, and lamp posts in the target parking slots, please do not use the one touch park.
- The one touch park is recommended for scenarios with standard lined parking slots, and not for mechanical garages, parking slots with irregular diagonal lines, parking slots with U-shaped lines, parking slots with round dot lines, parking slots crossing the road edge, grassland parking spaces, color-coded parking slots, or the places that cannot be recognized due to perception limitations.
- The parking slots on narrow streets, or narrow parking slots are not always available as the necessary operating space may be insufficient.
- APA may fail in too narrow parking slot (about 2.75m and below) or due to space limitations.
- Please try to avoid parking in micro-parking slots, which, due to insufficient parking space, may cause collision risks when the wheels cross the chocks.

WARNING

Functional limitations and errors

The one touch park function may not be available in the following scenarios, including but not limited to:

- In dark or low light environments, the sensor's perception ability will be significantly reduced, resulting in the inability to function smoothly.
- Adverse weather conditions such as rainy, foggy, snowy, or extremely cold or high temperatures can seriously interfere with the sensing ability of sensors, leading to the inability of functions to operate smoothly.
- The vehicle is equipped with snow chains or spare tires.
- When the road is on a slope, the one touch park system may not operate as expected.
- Mechanical garages, irregular diagonal lines, or parking spaces that cannot be recognized due to perception limitations are not recommended to use the one touch park function.
- Parking spaces on narrow streets or narrow parking spaces may not always be available as they may not have the necessary operating space.
- Narrow parking spaces or inability to park successfully due to space limitations.
- The parking space line is unclear or the color contrast between the parking space line and the parking space is not obvious, such as in the scene of a tiled car standing upright or the wheel marks left by the wheels passing over the water surface. This function may not be available.
- It is not recommended to use this function for micro parking spaces. Micro parking spaces may pose a collision risk if the vehicle crosses the wheel block due to insufficient length and space of the parking space.
- There are luggage racks or bicycles on the roof of the car, so it is not recommended to use this function to avoid scratching space objects (such as air conditioning ventilation pipes) during use.
- The one touch park function cannot be activated while other intelligent driver assistance functions are running.
- When there is a system malfunction, this function cannot be used.
- During the use of the function, if the driver actively folds the exterior rearview mirror, do not use this function.

One Touch Escape

One Touch Escape

After using the one touch park to park or manually parking the vehicle and selecting P gear, as long as the vehicle's position is not moved, you can use the one touch escape function, which can automatically control the vehicle's steering and speed, helping you move the vehicle out of the parking slot and complete the escape.

Requirements for parking spaces using one touch escape function:

1. Horizontal parking distance: The available distance length without obstacles in front and behind the vehicle must not be less than 1.1m, for the vertical parking distance (width): The available distance without obstacles on both sides of the vehicle must not be less than 0.6m to ensure smooth exit.

2. Manual parking requires the rear of the vehicle to enter the upcoming parking space before it can support the use of one touch escape function.

REMINDER

The intelligent parking-exit function (One Touch Escape) is completed by the following steps:

1. The intelligent parking-exit function can be enabled using the following methods:

Method 1: Click the "Pull Out" button on the 360 interface to enable the intelligent parking-exit function, and enter the intelligent parking-exit function interface;

Method 2: Click the "Pull Out" button on the HOME interface of the central screen to enable the intelligent parking-exit function, and enter the intelligent parking-exit function interface;

Method 3: Click the "Pull Out" button in One Touch iAD on the APP menu interface of the central screen to enable the intelligent parking-exit function, and enter the intelligent parking-exit function interface;

2. Select and confirm the parking-exit direction

This function will automatically detect and display the available parking-exit directions to the front left and front right; click the direction button, and you can switch to select the desired direction. When this function determines that a direction is not suitable for parking-exit due to obstacles, this direction will not be available for selection.

In general, this function will default to recommend and select the direction that you used the One Touch Park for parking previously; however, when the function determines that this direction is not suitable for parking-exit, it will not recommend it for you.

REMINDER: Sometimes this function cannot make direction recommendations because the system may fail to recognize or remember a clear parking-in direction. At this time, the driver should to choose the parking-out direction.

When you select a parking-exit direction, the function will display the path range that the parking-exit process it will go through. Please make sure that there are no objects in this range such as obstacles that could cause scratches or collisions, and follow the operation prompts on the function interface to start the parking-exit operation.

3. Operate the intelligent parking-exit function

During intelligent parking-exit operation, the interface will display the change of the relative position relationship between the current vehicle and the parking space in real time. This function will automatically control the steering and speed of the vehicle, but you still need to monitor the surroundings to ensure the safe parking-exit process.

4. Complete parking exit

After this function is completed, it will automatically engage P gear, and prompt: Parking Out Completed.

REMINDER

Pausing and Exiting the Function

1. The intelligent parking-exit process will be paused in the following cases:

- Click [Pause] button in the function interface;
- Press the brake pedal or open the door;
- The time from braking to stopping exceeds a certain period of time due to obstacles.

After the function is paused for a certain period of time, you can click the [Continue] button in the function interface to continue the parking-exit operation.

2. The parking-exit process will be exited in the following cases:

- The driver intervenes with the operation;

  - Turn the steering wheel

  - Move the shift lever

  The function has no response when the throttle is applied

- Click [Exit] button in the function interface;
- The function is paused for more than 1 minute due to obstacles;
- Abnormalities such as system failure or fault detection.

After the function is activated, if system intervention occurs, the vehicle's dual flash will turn on and corresponding prompts will be given on the interface. After the function is exited, the vehicle will automatically brake and shift to P gear, and the reason for exiting will be prompted.

Instructions for Using One Touch Escape

WARNING

The one touch escape function is only a combined driver assistance system, and the driver is responsible for driving the vehicle and bears full responsibility for safe driving of the vehicle; This function can assist the driver, but cannot replace the driver in driving. When choosing to use this function, due to limitations in system detection and control, it is not possible to handle all traffic, weather, and road conditions.

The driver is responsible for driving safety and needs to always hold the steering wheel, observe the road conditions, pay attention to the surrounding environment of the vehicle, and be ready to quickly take over the vehicle in case of danger. Do not rely on this function to control the vehicle, otherwise it may cause accidents or personal injuries.

When using the function, the exterior rearview mirror should remain unfolded, and the four cameras on the front, back, left, and right should be in normal working condition.

Surface contamination or obstruction of the camera can affect its perception ability, resulting in the inability to recognize parking spaces. Please clean the camera in a timely manner.

The performance of the system depends on the detection and recognition ability of the ultrasonic sensor and panoramic image camera for the environment. When using the function, the driver must be in the driver's seat and need to monitor the vehicle safety in real time. If necessary, take over to ensure the safety of the vehicle and its surroundings.

Sensors may not be able to recognize the following obstacles. Drivers are advised to observe the surrounding environment and promptly step on the brake pedal to take over the vehicle, including but not limited to:

- Objects with smaller widths such as thin poles, tubes, ropes, car handles, charging cables, water pipes, wire mesh, guardrails, fences, etc.
- Low objects such as stone piers, low stools, low fire hydrants, road edges, construction signs, vehicle barriers, etc.
- Suspended objects such as suspended fire hydrants, fire valves, suspended billboards, parking signs, truck tails, vehicle spare tires, air conditioning external units, suspended steps, ventilation or electrical water conservancy box pipelines, etc.
- Green plants and trees such as flower beds, shrubs, trees near parking spaces, potted plants, etc.
- Floor standing boxes and buckets such as fire extinguishers, garbage bins, cargo boxes, etc.
- Special vehicles, animals or pedestrians such as children, people with short stature/squatting/lying down or covered by other objects, animals, bicycles, tricycles, handcarts, baby strollers, shopping carts, garbage carts, etc.
- Reflective objects, such as glass doors, ground water accumulation, reflective floor paint parking spaces, etc.
- Obstacles that are closely attached to the parking space, such as square pillars in blind spots, iron doors that are closely attached to or partially invade the parking space, unfinished walls, etc.
- Other obstacles, such as conical or surface sloping objects, high sound absorbing objects (such as snow, cotton objects, etc.).
- Irregular objects such as garbage dumps, protrusions on surrounding vehicles, sharp obstacles, etc.
- Pits on the ground, such as potholes, ditches, sunken steps, etc.
- Irregular protruding objects, such as protruding door frames.
- During the parking process, sudden obstacles were found around the vehicle. Please take over in advance as the system may not be able to brake in a timely manner.
- The content included in the general warning for combined driver assistance.

WARNING

In the following scenarios, the one touch escape function may not function properly

In dark or low light environments, the sensor's perception ability will be significantly reduced, resulting in the inability to function smoothly.

Adverse weather conditions such as rainy, foggy, snowy, or extremely cold or high temperatures can seriously interfere with the sensing ability of sensors, leading to the inability of functions to operate smoothly.

The vehicle is equipped with snow chains or spare tires.

When the road is on a slope, the one touch escape may not function as expected.

When other intelligent driver assistance functions are running, the one touch escape function cannot be activated.

When the length of the front and rear space of the horizontal parking space is less than 1.1m, and the width of the left and right space of the vertical parking space is less than 0.6m, the function cannot operate.

If there is any movement of the vehicle since the last time it was parked and put into P gear, it will cause the function to fail to activate.

When the system recognizes that there are obstacles blocking both sides of the vehicle within a certain range, resulting in insufficient space for parking, the function cannot operate in that scenario.

The parking space line is unclear or the color contrast between the parking space line and the parking space is not obvious, such as in the scene of a tiled car standing upright or the wheel marks left by the wheels passing over the water surface. This function may not be available.

Parking spaces on narrow streets or narrow parking spaces may not always be available as they may not have the necessary operating space.

There are luggage racks or bicycles on the roof of the car, so it is not recommended to use this function to avoid scratching space objects (such as air conditioning ventilation pipes) during use.

When there is a system malfunction, this function cannot be used.

During the use of the function, if the driver actively folds the exterior rearview mirror, do not use this function.

WARNING

Function Limitation and Errors:

The parking-exit function may not operate properly in the following scenarios

- Dark or low light environments will significantly reduce the sensor's perception capability, which can affect the smooth operation of the function.
- Rainy, foggy, snowy or extremely cold or hot and other adverse weather environments will significantly effect the sensors capability, which can affect the smooth operation of the function.
- When other intelligent driving assistance functions are working, the intelligent parking-exit function cannot be enabled.
- Currently, the parking-exit function is supported by using data from parallel parking distance (length) and vertical parking distance (width),, rather than from the diagonal or irregular parking distances.
- The function cannot operate when the front and rear distance of the horizontal parking space is less than 1.1m and the left and right width of the vertical parking distance is less than 0.6m.

- When the system identifies that there is no obstacle within 4 meters in front of the vehicle, it will determine that you can easily park out, in this case, the intelligent parking-exit function will not be available for use.
- If the vehicle has moved since last parking in and engagement of P gear, then the function cannot be enabled.
- When the system identifies that there are obstacles on both sides of the vehicle within a certain range, resulting in insufficient space required for parking exit, the function cannot work.
- The intelligent parking-exit function does not work when driving on ramps.
- The sensor cannot identify the road with height difference, so do not use the function on the road with cliffs and steps to avoid accidents.
- The sensor cannot detect potholes, ditches, or uneven obstacles on the road. If such obstacles exist in the path for reversing, do not enable the function to avoid safety risks.
- When the steering wheel angle is too large, it will cause temporary suspension of the function, so please try to centralise the steering wheel before enabling the function.
- Do not use one touch escape if anything, such as a ball hitch, bike rack, or trailer, is attached to the tow hitch.
- Do not use the one touch escape on roads with slopes, snow, water, or potholes.
- Do not use one touch escape in extreme scenarios, such as cliffs or riverbanks.

One Touch Side

One Touch Side

When the driver stops the vehicle and the vehicle is stationary, the driver can enable the one touch side parking function to make the vehicle complete a lateral, or parallel manoeuvre to the left/right side using front/rear steps of 15cm, until the vehicle moved into the parallel parking place.

REMINDER

The current one touch side parking function is designed for scenarios using reference objects such as curbs and walls. After completing a lateral manoeuvre to left or right using forward and rearward steps of 15 cm, the vehicle will be aligned and parallel to the reference object (If the angle between the rear and the reference object is about 18.3° or the angle between the front and the reference object is about 6.1°, the one touch side parking function can work normally); if there is no appropriate reference object, the lateral manoeuvre of the vehicle to the left or right using forward and rearward steps of 15 cm will be carried out (the position of the body after the initial approach is consistent with that of before the approach).

Before using the one touch side parking function, the driver must keep the body as parallel to the surrounding reference object (such as curbs and walls) as possible.

Please use the one touch side parking function when the distance is greater than 20cm from the curb and greater than 40cm from the wall, and the total distance (from the front of the vehicle to the vehicle ahead + from the rear of the vehicle to the vehicle behind) is greater than 1.5m.

REMINDER

You may use the one touch side function by the following steps:

1. Enable the function

Method 1: Click the "Curbside" button on the 360 interface to enable the one touch side parking function, and enter the one touch side parking function interface.

Method 2: Click the "Curbside" button on the HOME interface of the central screen to enable the one touch side parking, and enter the one touch side parking interface.

Method 3: Click the "Curbside" button in One Touch iAD on the APP menu interface of the central screen to enable the one touch side parking, and enter the one touch side parking interface.

2. Activate the function

- After entering the "One Touch Curbside"interface, the vehicle should be in P gear or Auto Hold mode;
- Select the direction for one touch side parking;
- Read and confirm the Instructions for Use;
- Click "Start" button to carry out one touch side parking;
- During operation, the function will automatically control the vehicle to steer, move forward and backward, but the driver must always monitor the surroundings of the vehicle.

3. Complete the function

After function is completed, it will automatically engage P gear and prompt: One Touch Side Parking Completed.

4. Use the function again

After the one touch side parking function is completed, you can use the function again by clicking the "Side Parking" button on the large screen according to actual needs.

REMINDER

Pause and exit of the function:

- The one touch side parking function will be paused in the following cases:

  - Click [Pause] button in the large screen function interface;

  - Press the brake;

  - Open any door/bonnet/trunk;

  - Brakes are applied to stop due to obstacles (within 60s after the pause of the function, the user can click [Continue] button in the large screen function interface to resume the one touch side parking function).

- The one touch side parking function will be exited in the following cases:

  - The driver's intervention

  - Turn the steering wheel

  - Move the shift lever

  - Power off the vehicle

  The function has no response when the throttle is applied;

- Click [Exit] button in large screen function interface (in Pause page);

- The function pause times out (more than 60s) due to obstacles not removed;

- Abnormalities such as system failure or fault detection.

After the function is activated, if system intervention occurs, the vehicle's dual flash will turn on and corresponding prompts will be given on the interface. After the function is exited, the vehicle will automatically brake and shift to P gear, and the reason for exiting will be prompted.

Instructions for Using One Touch Side

WARNING

The one touch side function is only for combined driver assistance systems. The driver is responsible for driving the vehicle and bears full responsibility for safe driving of the vehicle; this function can assist the driver, but cannot replace the driver in driving. When choosing to use this function, due to limitations in system detection and control, it is not possible to handle all traffic, weather, and road conditions.

The driver is responsible for driving safety and needs to always hold the steering wheel, observe the road conditions, pay attention to the surrounding environment of the vehicle, and be ready to quickly take over the vehicle in case of danger. Do not rely on this function to control the vehicle, otherwise it may cause accidents or personal injuries.

When using the function, the exterior rearview mirror should remain unfolded, and the four cameras on the front, back, left, and right should be in normal working condition.

Surface contamination or obstruction of the camera can affect its perception ability, resulting in the inability to recognize parking spaces. Please clean the camera in a timely manner.

The performance of the system depends on the detection and recognition ability of the ultrasonic sensor and panoramic image camera for the environment. When using the function, the driver must be in the driver's seat and need to monitor the vehicle safety in real time. If necessary, take over to ensure the safety of the vehicle and its surroundings.

Sensors may not be able to recognize the following obstacles. Drivers are advised to observe the surrounding environment and promptly step on the brake pedal to take over the vehicle, including but not limited to:

- Objects with smaller widths such as thin poles, tubes, ropes, car handles, charging cables, water pipes, wire mesh, guardrails, fences, etc.
- Low objects such as stone piers, low stools, low fire hydrants, road edges, construction signs, vehicle barriers, etc.
- Suspended objects such as suspended fire hydrants, fire valves, suspended billboards, parking signs, truck tails, vehicle spare tires, air conditioning external units, suspended steps, ventilation or electrical water conservancy box pipelines, etc.
- Green plants and trees such as flower beds, shrubs, trees near parking spaces, potted plants, etc.
- Floor standing boxes and buckets such as fire extinguishers, garbage bins, cargo boxes, etc.
- Special vehicles, animals or pedestrians such as children, people with short stature/squatting/lying down or covered by other objects, animals, bicycles, tricycles, handcarts, baby strollers, shopping carts, garbage carts, etc.
- Reflective objects, such as glass doors, standing water on the ground, reflective floor paint, etc.
- Obstacles that are closely attached to the parking space, such as square pillars in blind spots, iron doors that are closely attached to or partially invade the parking space, unfinished walls, etc.
- Other obstacles, such as conical or surface sloping objects, high sound absorbing objects (such as snow, cotton objects, etc.).
- Irregular objects such as garbage dumps, protrusions on surrounding vehicles, sharp obstacles, etc.
- Pits on the ground, such as potholes, ditches, sunken steps, etc.
- Irregular protruding objects, such as protruding door frames.
- During the edging process, it was discovered that there were sudden obstacles around the vehicle. Please take over in advance as the system may not be able to brake in a timely manner.
- The content included in the general warning for combined driver assistance.

WARNING

Functional limitations and errors:

The one touch side function may not be available in the following scenarios, including but not limited to:

- In dark or low light environments, the sensor's perception ability will be significantly reduced, resulting in the inability to function smoothly.
- Adverse weather conditions such as rainy, foggy, snowy, or extremely cold or high temperatures can seriously interfere with the sensing ability of sensors, leading to the inability of functions to operate smoothly.
- The vehicle is equipped with snow chains or spare tires.
- When the road is on a slope, the one touch side function may not operate as expected.
- When the distance between the front and rear space of the vehicle is less than 1.5m, the function cannot be used.
- If the angle between the self-driving vehicle and the surrounding edge reference object is too large, the automatic edging function cannot be used and only fixed edging can be used.

One Touch Reverse

One Touch Reverse

One touch reverse function (hereinafter referred to as: Tracking function) will automatically and silently remember driven paths of 50m when the speed is 0~25 km/h without any operation from you. When you drive into difficult road conditions, such as encountering another vehicle or object on a narrow road, a dead end street other scenarios that require you to reverse, you can enable the tracking function, which can automatically control the steering and speed, to help you reverse according to the original path taken and remove you from a difficult situation.

REMINDER

The tracking function can be used when the valid memory path length is more than 1 meter and the road width of the vehicle is greater than 3 meters.

When other intelligent driving assistance systems are running, the tracking function cannot silently remember the path, or the function cannot be used because of the unavailability of valid memory path.

REMINDER

The tracking function assists reversing by the following steps:

1. Methods to enable the function:

Method 1: Click the "Reverse" button on the 360 interface to enable the function and enter the function interface;

Method 2: Click the "Reverse" button on the HOME interface of the central screen to enable the function and enter the function interface;

Method 3: Click the "Reverse" button in One Touch iAD on the APP menu interface of the central screen to enable the function and enter the function interface.

After entering the tracking function interface, stop the vehicle and maintain brake pedal application, you are then able to view the total length of the expected tracking process and click"Reverse" and follow the operation prompts on the interface.

2. Run the function:

During tracking, the remaining tracking distance will be displayed in real time. The function will automatically control the steering and speed of the vehicle, but you still need to monitor the surroundings to be ready to take over and ensure the safe tracking. When it is about to reach the end of the tracking, the interface will display an advanced prompt stating that the function is about to reach the end.

3. Complete the function:

Reverse tracking is completed when the function controls the vehicle to automatically reverse to the end of the memory path. After the function is completed, it will automatically engage P gear, and prompt: Tracking Completed.

REMINDER

Pause and exit of the function:

- The tracking function will be paused in the following cases:

  - Click [Pause] button in the function interface;

  - Press the brake or open the door;

  - The time from braking to stopping exceeds a certain period of time due to obstacles.

  After the function is paused for a certain period of time, you can still click the [Continue] button in the function interface to continue the tracking operation.

- The tracking function will be exited in the following cases:

  - The driver intervenes with the driving

  - Turn the steering wheel

  - Move the shift lever

  The function has no response when the throttle is applied;

- Click [Exit] button in function interface (available only when the function is paused);

- The function is paused for more than 1 minute due to obstacles;

- Abnormalities such as system failure or fault detection.

After the function is activated, if system intervention occurs, the vehicle's dual flash will turn on and corresponding prompts will be given on the interface. After the function is exited, the vehicle will automatically brake and shift to P gear, and the reason for exiting will be prompted.

Instructions for Using One Touch Reverse

WARNING

The one touch reverse function is only a combined driver assistance system, the driver is responsible for driving the vehicle and bears full responsibility for safe driving of the vehicle; this function can assist the driver, but cannot replace the driver in driving. When choosing to use this function, due to limitations in system detection and control, it is not possible to handle all traffic, weather, and road conditions.

The driver is responsible for driving safety and needs to always hold the steering wheel, observe the road conditions, pay attention to the surrounding environment of the vehicle, and be ready to quickly take over the vehicle in case of danger. Do not rely on this function to control the vehicle, otherwise it may cause accidents or personal injuries.

When using the function, the exterior rearview mirror should remain unfolded, and the four cameras on the front, back, left, and right should be in normal working condition.

Surface contamination or obstruction of the camera can affect its perception ability, resulting in the inability to recognize parking spaces. Please clean the camera in a timely manner.

The performance of the system depends on the detection and recognition ability of the ultrasonic sensor and panoramic image camera for the environment. When using the function, the driver must be in the driver's seat and need to monitor the vehicle safety in real time. If necessary, take over to ensure the safety of the vehicle and its surroundings.

Sensors may not be able to recognize the following obstacles. Drivers are advised to observe the surrounding environment and promptly step on the brake pedal to take over the vehicle, including but not limited to:

- Objects with smaller widths such as thin poles, tubes, ropes, car handles, charging cables, water pipes, wire mesh, guardrails, fences, etc.
- Low objects such as stone piers, low stools, low fire hydrants, road edges, construction signs, vehicle barriers, etc.
- Suspended objects such as suspended fire hydrants, fire valves, suspended billboards, parking signs, truck tails, vehicle spare tires, air conditioning external units, suspended steps, ventilation or electrical water conservancy box pipelines, etc.
- Green plants and trees such as flower beds, shrubs, trees near parking spaces, potted plants, etc.
- Floor standing boxes and buckets such as fire extinguishers, garbage bins, cargo boxes, etc.
- Special vehicles, animals or pedestrians such as children, people with short stature/squatting/lying down or covered by other objects, animals, bicycles, tricycles, handcarts, baby strollers, shopping carts, garbage carts, etc.
- Reflective objects, such as glass doors, standing water on the ground, reflective floor paint, etc.
- Obstacles that are closely attached to the parking space, such as square pillars in blind spots, iron doors that are closely attached to or partially invade the parking space, unfinished walls, etc.
- Other obstacles, such as conical or surface sloping objects, high sound absorbing objects (such as snow, cotton objects, etc.).
- Irregular objects such as garbage dumps, protrusions on surrounding vehicles, sharp obstacles, etc.
- Pits on the ground, such as potholes, ditches, sunken steps, etc.
- Irregular protruding objects, such as protruding door frames.
- During the parking process, sudden obstacles were found around the vehicle. Please take over in advance as the system may not be able to brake in a timely manner.
- The content included in the general warning for combined driver assistance.

WARNING

Function Limitation and Errors:

In the following scenarios, the one touch reverse function may not function properly

- In dark or low light environments, the sensor's perception ability will be significantly reduced, resulting in the inability to function smoothly.
- Adverse weather conditions such as rainy, foggy, snowy, or extremely cold or high temperatures can seriously interfere with the sensing ability of sensors, leading to the inability of functions to operate smoothly.
- The vehicle is equipped with snow chains or spare tires.
- When the road is on a slope, the one touch reverse function may not function as expected.
- When other intelligent driver assistance functions are running, the one touch reverse function cannot be activated.
- Obstacles within 30cm of the vehicle body are in a perceptual blind zone. When there are obstacles within 30cm of the vehicle body, do not activate the function to avoid collision accidents between the vehicle and its surroundings.
- The operation of the function requires sufficient channel width. Reversing in a channel environment with a width less than 3 meters will cause the function to be interrupted and exit.
- Sensors cannot recognize road surfaces with height differences. Do not use the function on cliffs or roads with steps to avoid accidents.
- For sharp turns or exits due to insufficient turning radius causing the function to fail to operate successfully.
- When the effective memory path is less than 1 meter, the function cannot be used.
- Exiting midway during the reverse tracking process will cause the system to clear the memorized route, making it impossible to re-enter the function and continue reversing the remaining path.
- The following situations can also cause the system to clear the memorized path, resulting in the inability to use the function, including but not limited to: driving at a speed greater than 25 kilometers per hour, excessive steering wheel angle, vehicle power off, activation of other intelligent driver assistance functions, etc.

Rear Collision Assist System

Rear Collision Assist System

NOTE: On the central screen, you can enable the Rear Driver Assistance (RDA) system and set each sub-function.

REMINDER: Rear Collision Assist System includes Blind Spot Warning, Rear Side Coming Assist, and Door Open Warning functions. For detailed information on each function, please see the content below. Note that using any of the Rear Collision Assist System functions requires following the requirements in the "**Important Instructions for Using Rear Collision Assist System**".

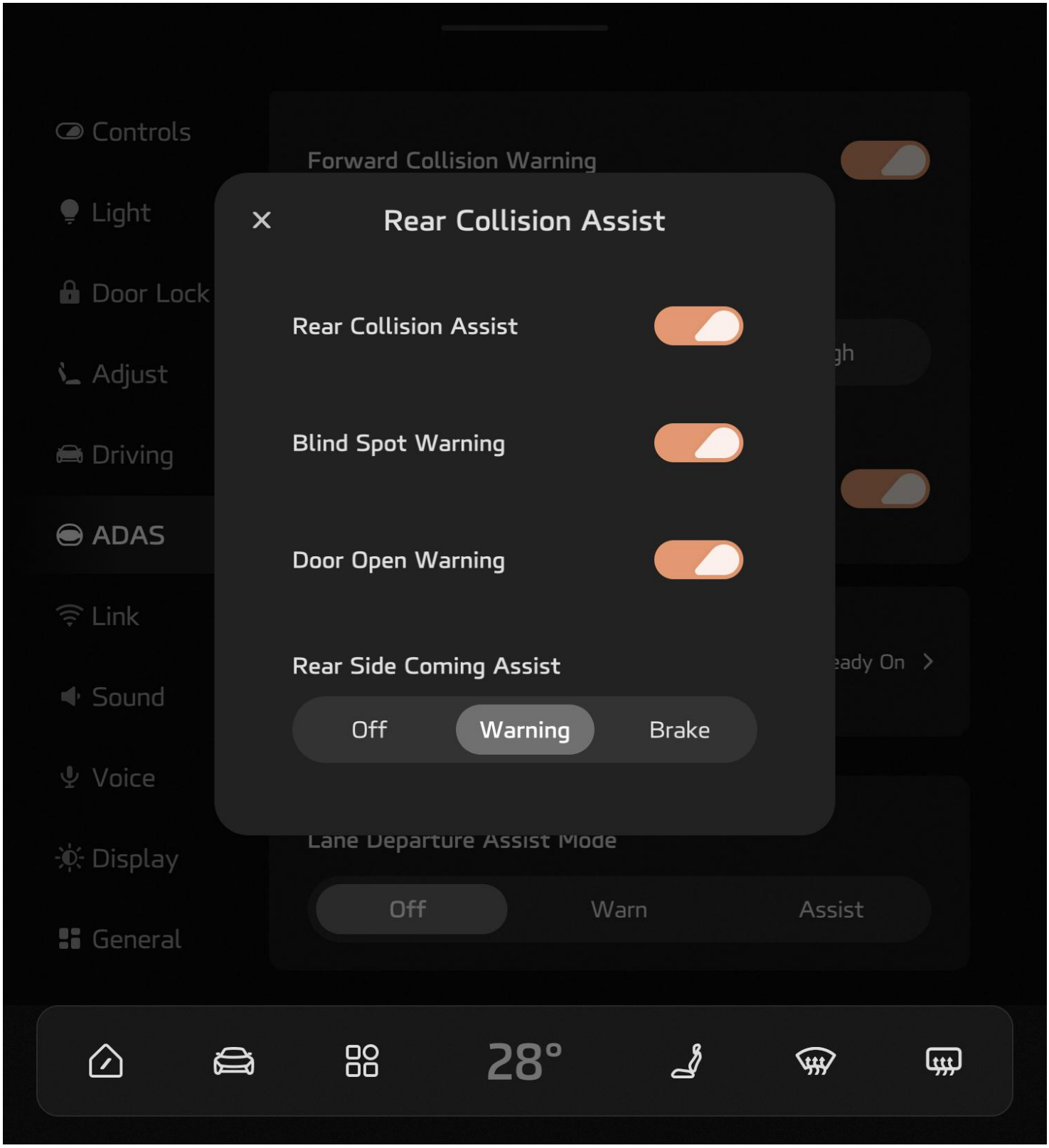
Controls
Light
Door Lock
Adjust
Driving
ADAS
Link
Sound
Voice
Display
General
Forward Collision Warning
Rear Collision Assist
Rear Collision Assist
Blind Spot Warning
Door Open Warning
Rear Side Coming Assist
Off
Warning
Brake
Lane Departure Assist Mode
Off
Warn
Assist
28°

Blind Spot Warning

The blind spot warning includes two active safety assist functions, Blind Spot Detection (BSD) and Lane Change Assist (LCA), which are intended to alert the driver of vehicles located in blind spots at the rear and side of your vehicle, providing assistance in multi-lane co-direction traffic conditions.

The Blind Spot Detection (BSD) (For specific introduction of BSD functions and restrictions, please refer to Part 8 - Blind Spot Detection of this handbook.) alerts the driver of the vehicles in the blind spot of your vehicle (1) the Lane Change Assist (LCA) alerts the driver of the vehicles approaching quickly with a potential collision risk in the adjacent lanes (2).

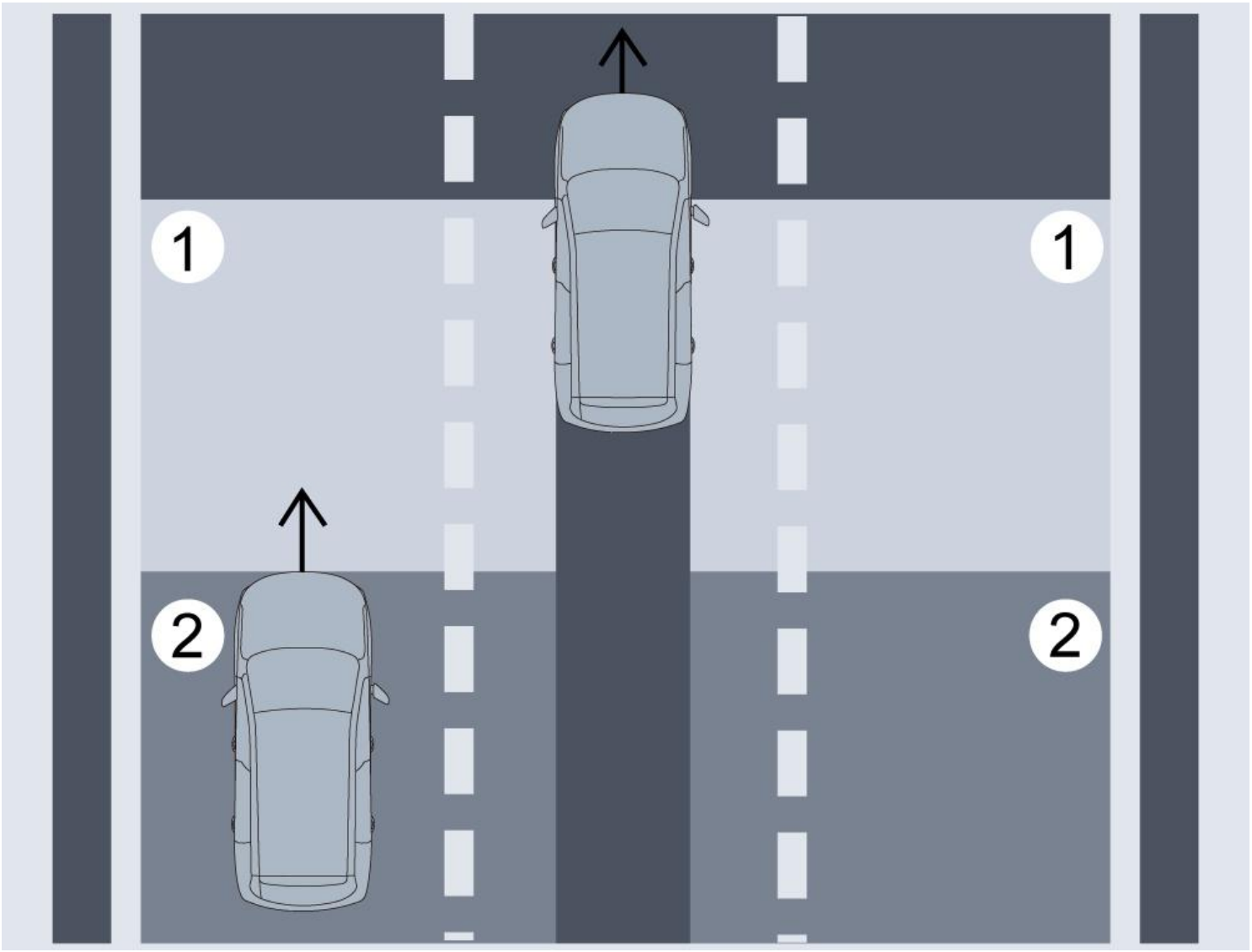

During the process (when vehicle speed is above 15 km/h), when the system detects that there is a car in the blind area of the exterior rearview mirror or an approaching car behind in the adjacent lane.the corresponding side alarm illuminates. If the direction indicator on the same side is selected at this time, the warning light will blink, alerting the driver that it is dangerous to continue changing lanes.

Rear Side Coming Assist

Rear side coming assist includes Rear Cross Traffic Alarm (RCTA) and Rear Cross Traffic Brake (RCTB).

During reversing, the RCTA monitors for any vehicles approaching from the left, right and rear of your vehicle through a sensor, and provides an alert when there is a risk in reversing. Frequent alarms sound from inside the car, while the 360-degree view of the lower and outer mirrors of the model car will continuously flash patterns and lights on the side of the oncoming vehicle to warn them. The RCTB is an extended function of RCTA. In addition to providing alerts, the functions outside of RCTA, the system will perform emergency braking to avoid the risk of collision if the driver fails to take safety measures.

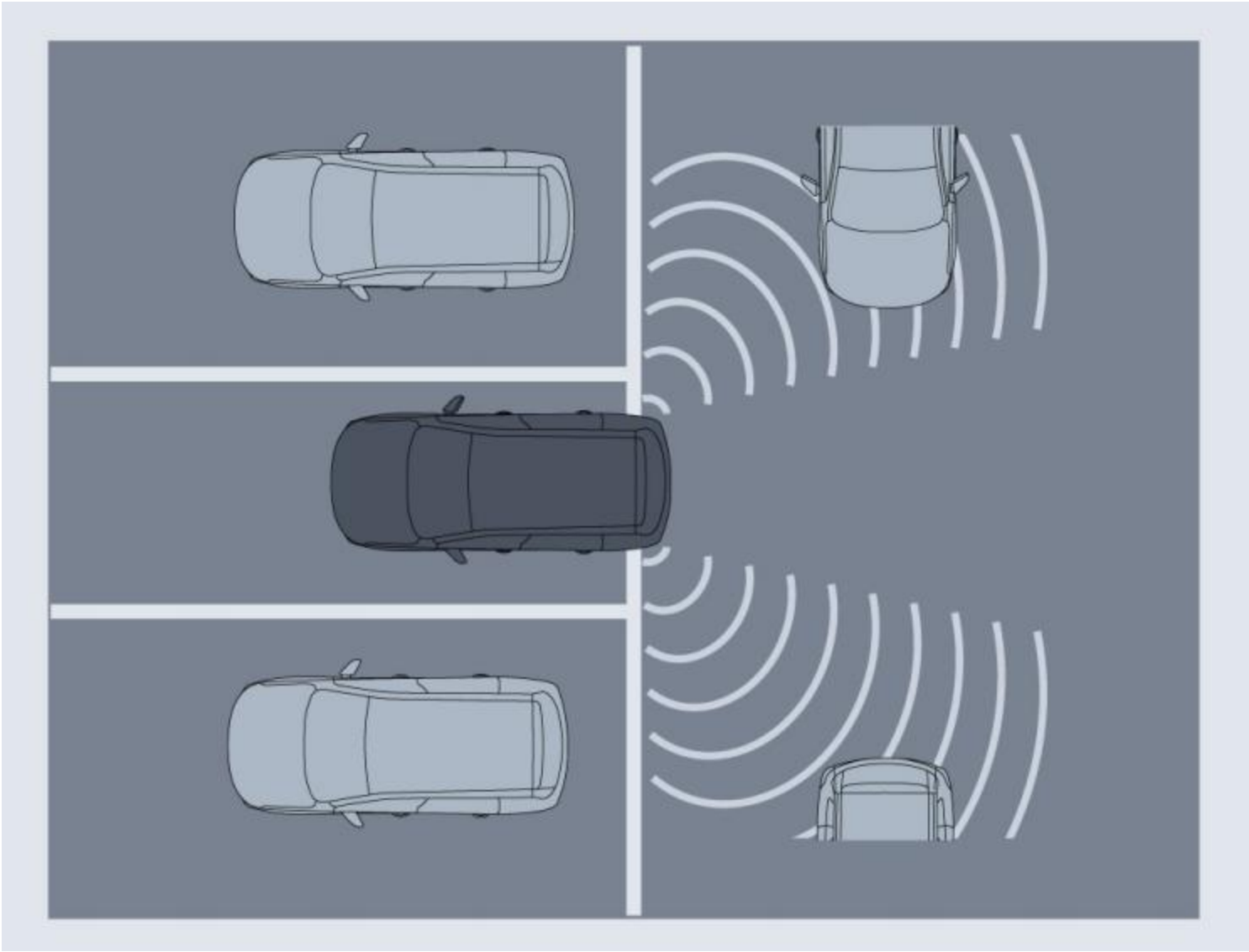

When there is danger, the alarm light on the corresponding side illuminates, and at the same time, the main driving screen responds to the alarm information. If the driver does not take emergency measures, the system will engage emergency braking.

Rear side coming assist in Rear Collision Assist can be set to "Off" or "Warning".

Function description: When there is a lateral vehicle (car/two-wheeler) behind the vehicle side and there is a potential risk of collision, RCTA (Rear Cross Area Warning System) will be activated; If a vehicle is approaching or at a high speed, RCTB (Rear Cross Traffic Braking) is activated.

REMINDER

Generally, when starting in a parking lot or at an intersection, the RCTA/B function can remind the driver of the lateral oncoming vehicle behind the driver, but if the surrounding environment of the vehicle is complex, such as a two-wheeled vehicle passing through, or a large traffic flow, it is also easy to activate RCTA/B. In this case, if you are worried about too much braking, you can choose "Warning" on the center control screen.

Door Open Warning

When the vehicle is stationary, the Door Open Warning function (DOW) monitors vehicles, motorcycles or other motorised objects approaching from behind through sensors at he rear on each side. When opening the door, if the vehicle detects there is a danger associated with opening a door, it will give an alarm to avoid the risk of damage. When there is a collision risk, the alarm light of the exterior mirror on the opposite side will be illuminated, if or continues to be opened, the alarm light will flash and the audible alarm. will sound frequently in the car.

Important Instructions for Using Rear Collision Assist System

WARNING

You should understand that this system is only designed to assist the driver, and the driver is still the main operator, and should strictly use this function in accordance with the relevant instructions and comply with applicable national and local traffic safety regulations, and be responsible for the safety of the entire parking process. You should judge the use of the system based on the overall environment (such as weather, geographical environment, etc.), and assume the corresponding responsibility for your judgment.

Rear Collision Assist System includes Blind Spot Warning, Rear Side Coming Assist, and Door Open Warning functions. Using any of the Rear Collision Assist System functions requires following the requirements:

- The Rear Collision Assist System can only assist the driver to observe the surrounding environment and the driver should always focus attention, observe the surroundings of the vehicle and drive safely.
- Rear Collision Assist System cannot replace the driver's observation and judgment. The driver must keep control of vehicle at all time and drive properly and is fully responsible for the vehicle.
- If Blind Spot Detection function is involved, the driver needs to pay extra attention to the function description of Blind Spot Detection and follow the corresponding instructions and usage restrictions.
- Specific roadside buildings (such as high or oblique guardrail), weather conditions, weight of loads on the vehicle, road conditions (such as road bumps or sharp turns), coverings on the car, etc. will affect the recognition effect of the rearward driver assistance system sensor, thus a false alarm may be issued.
- The system may not be able to warn the driver of the vehicles that are approaching very fast from the rear or warn the driver when the vehicle approaches from around a bend with small turning radius.
- The system cannot work properly when a towing device is attached.
- The radar sensor in the rear bumper may be misaligned or damaged by a collision, and the system may be affected or automatically turned off.
- Do not paste or position any object on the warning lamp to avoid affecting the warning function of the system.
- To ensure that the radar sensor works properly, the rear bumper should be kept free of snow and ice and must not be covered.
- The rear bumper should only be repaired using automotive paint certified by the manufacturer, otherwise the system functions may be restricted or defective.
- Detection may be affected or delayed in some environments. If the radar cross section of the target vehicle is too small (a bicycle, electric moped or pedestrian, for example), the system may fail to identify targets, leading to false alarms. In addition, detection may also be affected or delayed by noise or electromagnetic interference.

Intelligent Safety Assist*

Speed Limit Information Function (SLIF)

Intelligent Safety Assist (ISA) includes 2 functions, SLIF & SCF Like.
Speed Limit Information Function (SLIF) is an assistant to the speed limit reminder. The system can recognize road speed limit signs, and provide the current speed limit information to the driver through the instrument pack. If the vehicle exceeds the current road speed limit value, the system will alert the driver, in order to assist the driver in complying with the local laws and speed limits.

NOTE: The SLIF interface is on the central screen: Enter the "ADAS" option, and scroll through the pages to find the "SLIF Settings" interface. The driver can click "OFF" to turn off the "SLIF" function.

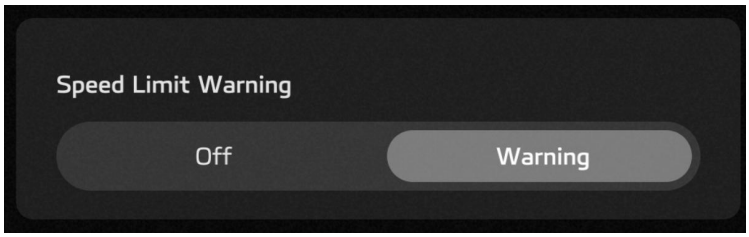

Intelligent Adaptive Cruise Control (SCF Like)

When the ACC/Pilot (Pilot is the full-speed driver assistance function) function is activated and the iACC switch is turned on, if the SLIF detects a change in speed limit, the driver is reminded to set the new limit. If the driver confirms the operation during the reminder period, this speed limit value will be used as the new speed limit.

SLIF involves ACC/Pilot. Therefore, all instructions and restrictions related to ACC/Pilot function in this handbook must be followed during use.

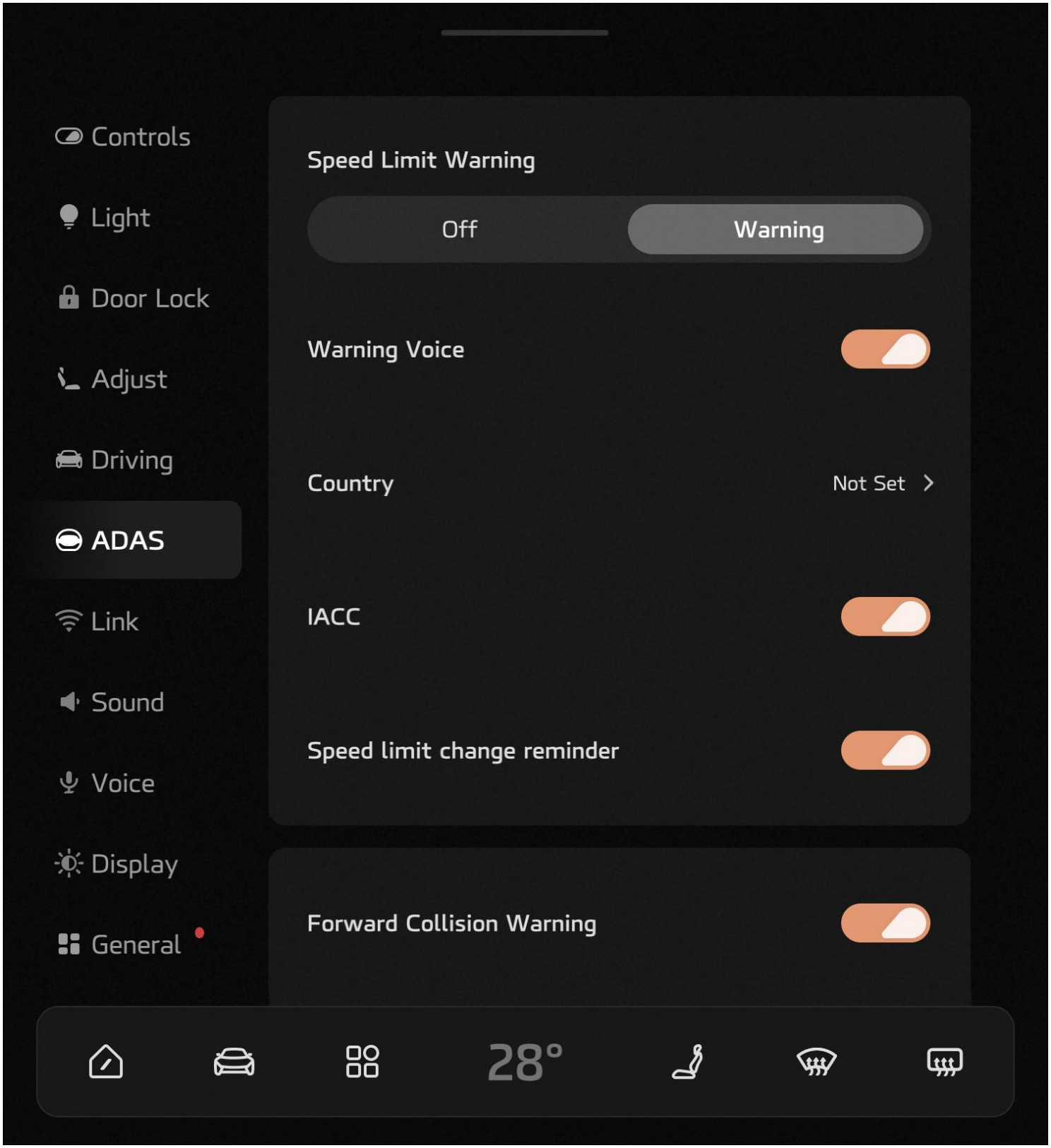

REMINDER

- Set speed limit

Reminder and duration: After the SLIF detects a change in speed limit, a speed limit value update reminder will be sent within 3 seconds, with a reminder duration of 5 seconds.

Setting action: If the driver's lever(gear lever) lasts for 2 seconds, this speed limit value will be used as the new speed limit.

- Reminder Lifted

Turn the cascade switch off;

Exit ACC/Pilot mode;

- Reminder Re-triggered

The speedometer speed becomes equal to or lower than the preset speed limit;

Full release of the accelerator control for more than 6 seconds;

Application of the braking system, or the preset speed limit has changed to a lower value.

WARNING

Do not rely on SLIF to determine an accurate or appropriate cruising set speed. It is the driver’s responsibility to cruising at a safe speed based on road conditions and applicable speed limits.

Intelligent Speed Assistant (ISA)

WARNING

ISA, is an assist function, the incorrect speed limit value or no speed limit value may be displayed on the instrument pack due to environmental factors or the system itself, so the driver must always observe the speed limit regulations of the road traffic and MUST adjust their driving speed accordingly.

ISA serves as a driver assistance function only, so the driver must be fully responsible for driving safety. Please note that any ISA system indications and warnings are without prejudice to the actual speed limit applicable in a particular situation, the observation of which and compliance with remain ultimate responsibility of the driver.

The use of ISA may be limited in the following conditions, including but not limited to:

- The vehicle is driven at a high speed;
- There are several speed limit signs set up over the road or at the roadside; Currently, the front view camera can only identify the speed limit signs for the lane the car is traveling in, different style speed limit signs, and the speed limit signs with additional information;
- The speed limit signs set up at the fork in the road, curve and on-ramp/off-ramp;
- Lane change, etc.;
- Affected by poor lighting conditions, bad weather, non-standardized or sheltered speed limit signs or the camera's own restrictions, the camera may not recognize all speed limit signs or make errors in recognition (eg, recognize the weight limit sign as a speed limit sign, recognize the minimum speed sign as the maximum speed sign);
- The camera cannot identify any text provided below the speed limit sign, such as Auxiliary Lane, 100m Ahead, School Section, 7:00-10:00 etc.;
- Some drastic and rapid steering operations of the driver may be judged as changing lane or turning around in the intersection by the system, resulting in the identified speed limit signs being cleared;
- Temporarily conflicting road markings in construction zones;
- Misleading, defective or missing road signs;
- ISA Function performance depends on weather conditions, lighting, and traffic sign visibility. The system may fail to or incorrectly identify the sign at night or sunset, in rain, fog, haze, snow or dust, when light is coming from the back of the vehicle, or when there is a sudden change in lighting.
- In the above scenarios where the use of ISA may be limited, the driver may switch off the ISA function manually by clicking the button.



- ISA Function performance relies on the navigation map, to maintain high performance the function maps must be updated periodically through dealers.

The front view camera cannot identify the speed limit signs painted on a road surface, the driver must observe the speed limit requirements on the road surface in real time. When the vehicle needs to change lane or make a turn or turn around in the intersection, if the driver operates the direction indicator switch in advance and slows down, the original speed limit value on the instrument pack will be cleared until a new speed limit sign is detected; if such conditions are not met, the original speed limit value will be kept. The driver should make any judgments at their discretion.

Full-speed Adaptive Cruise Control System

Full-speed Adaptive Cruise Control System

Depending on whether there is a vehicle ahead, the full-speed adaptive cruise control system can conduct automatic switching between constant speed cruise and car-following cruise.

With the full-speed adaptive cruise control system, the vehicle is allowed to conduct constant speed cruise within a certain speed range, or conduct car-following cruise by setting the distance between the vehicle and vehicles ahead.

If a vehicle is detected in your driving path, the full-speed adaptive cruise control system may apply moderate braking or acceleration to maintain the selected following distance.

Activation of Adaptive Cruise Control

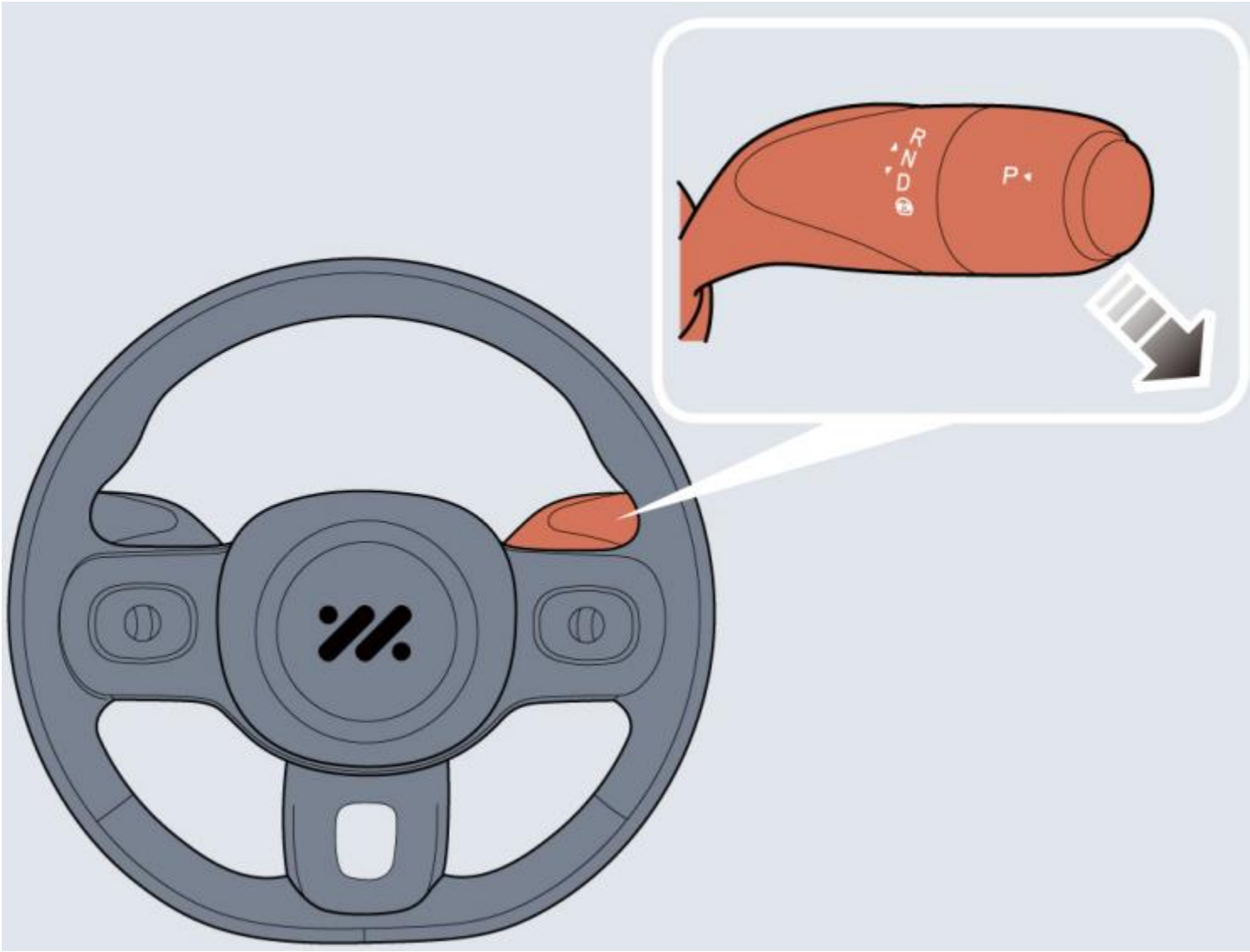

REMINDER

The adaptive cruise control system is activated by fully pulling down the shift lever once when the following conditions are met:

1. The gear is in D;

2. The electronic parking brake is released;

3. Four doors and bonnet and tailgate are closed;

4. The seat belt is fastened;

5. The adaptive cruise control switch on the entertainment display is turned on;

6. The speed must be above 0 km/h if there is a vehicle ahead; the speed must be above 10 km/h if there is no vehicle ahead.

7. The vehicle speed is not greater than 130 km/h.

After successful activation, the indicator light of the adaptive cruise control system on the instrument pack will be illuminated, its target speed is the actual speed at activation.

REMINDER

If your vehicle speed is less than 30 km/h, the target speed of the system is set at 30 km/h), and the set speed range is 30 to 130 km/h.

If the speed of the vehicle ahead is greater than the cruise target speed of your vehicle, your vehicle will maintain the target speed to conduct constant speed cruise; if the speed of the vehicle ahead is lower than the cruise target speed of your vehicle, it will enter the car-following cruise, and the tail schematics of the vehicle ahead is displayed on the instrument pack.

REMINDER

In car-following cruise, you can follow the vehicle ahead to a stop. If the stop time is less than 90 seconds, your vehicle will automatically start off to follow the vehicle ahead, otherwise the driver needs to restore the adaptive cruise control system according to the instrument pack prompt; if the car-following stop lasts for more than 10 minutes, the adaptive cruise control function will exit.

Adjustment of Target Speed

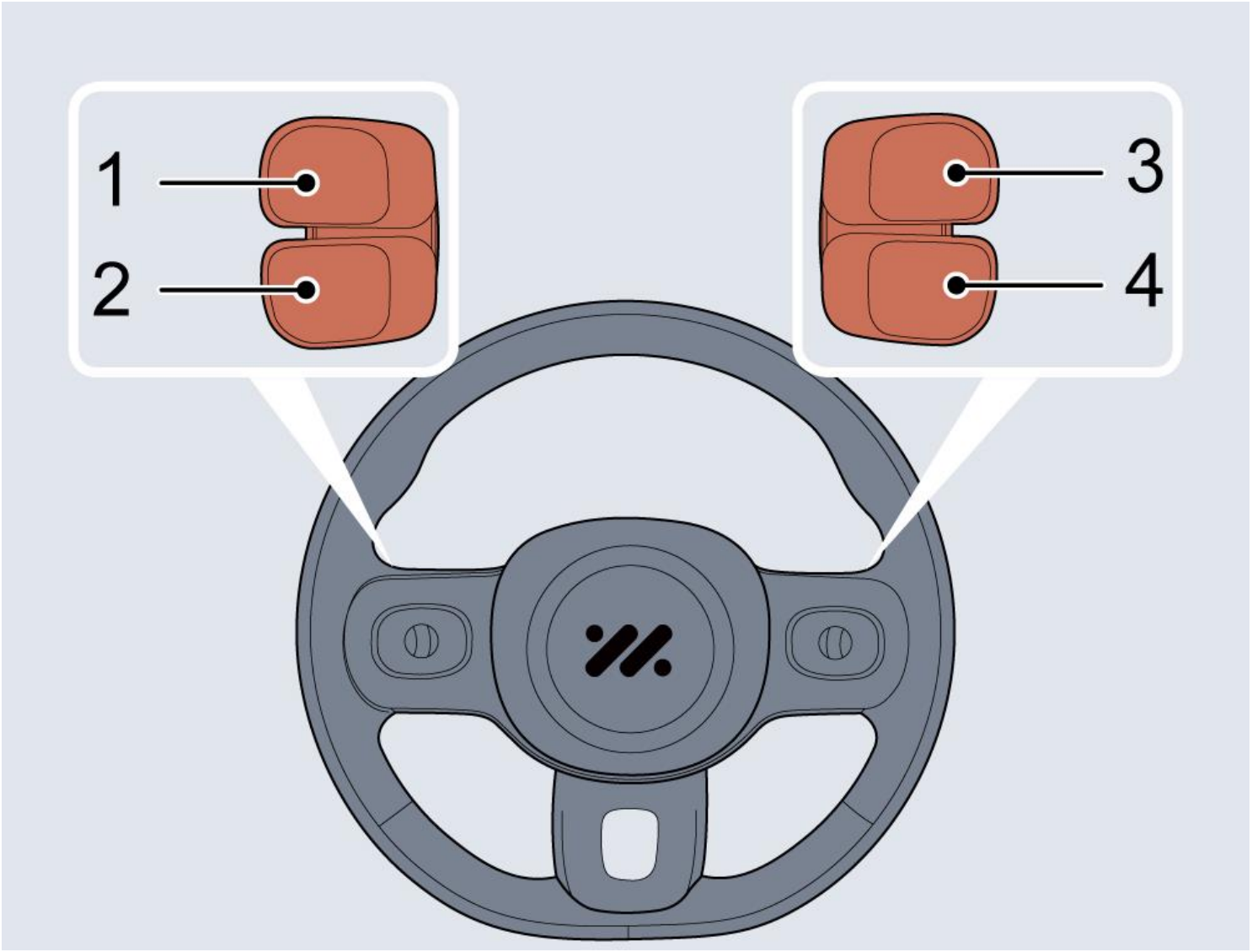

REMINDER

When the adaptive cruise control system is active:

- Use the accelerator pedal to reach the desired speed, and fully pull down the shift lever, the vehicle will cruise at the desired speed.
- Move the upper adjustment paddle on the left of steering wheel (1) and hold, the target speed will increase until the desired set speed appears on the instrument pack, and then release the paddle. When it is confirmed that there is no vehicle ahead or the vehicle ahead is beyond the pre-selected following distance, the vehicle speed can be increased to the set speed.
- Move the lower adjustment paddle on the left of steering wheel (2) and hold, the target speed will decrease until the desired set speed appears on the instrument pack, then release the paddle, and the speed will decrease to the set speed.
- When adjusting the target speed with the adjustment paddle, the target speed is changed by 5 km/h each time the paddle is moved briefly; when moving the paddle and holding, the target speed will increase or decrease at a change rate of 1 km/h until the paddle is released.

Adjustment of Following Distance

When the adaptive cruise control system is activated, move the upper adjustment paddle (3, for increasing the distance) or lower adjustment paddle (4, for decreasing the distance) on the right of steering wheel to adjust the following distance, switch among 5 distance settings, they are displayed on the instrument pack.

Select an appropriate following distance according to the relative speed considering the vehicle ahead, the higher the relative speed, the greater the following distance should be set. Considering the traffic and weather conditions, the optional following distance range may not be suitable for all drivers and driving conditions.

Cancellation and Restoration of Adaptive Cruise Control

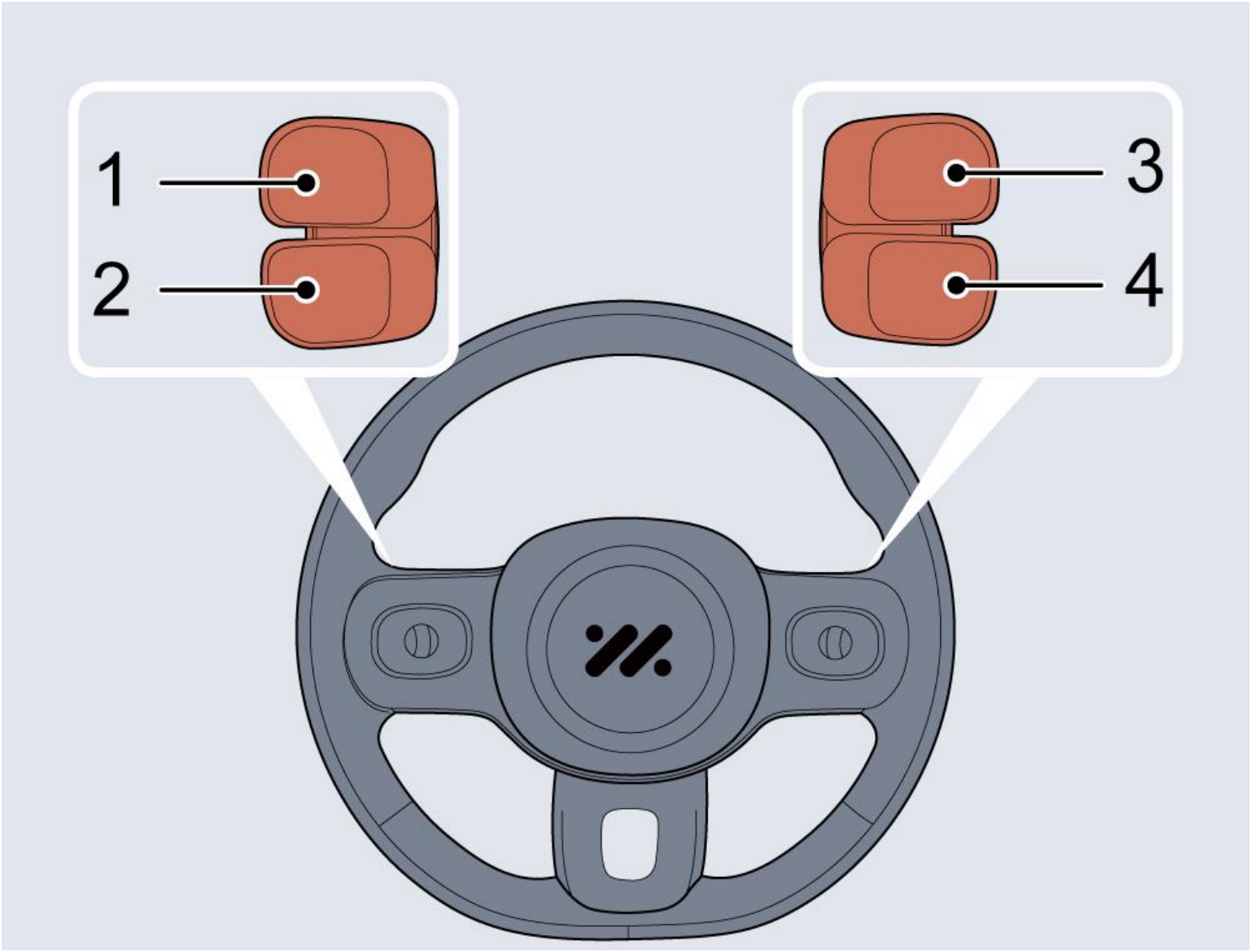

REMINDER

When the adaptive cruise control system is active, fully raise the shift lever to cancel the function.

If it is not the first time the ACC has been activated within the vehicle start cycle, it may be reactivated by moving the upper adjustment knob (1) on the left of steering wheel. In this case, the target cruise speed is the target speed before exiting the adaptive cruise control system.

Automatic Deactivation of Adaptive Cruise Control

REMINDER

If any of the following conditions occur, the adaptive cruise control function is automatically deactivated:

- Press the brake pedal when the vehicle is not stationary;
- Move the shift lever to any gear other than Drive gear;
- The driver unfastens his/her seat belt;
- Apply the accelerator pedal for a long time;
- Any door or the bonnet/tailgate is opened while driving;
- Pull up the electronic parking brake switch;
- The vehicle is stopped for more than a certain time;
- The camera or radar is blocked, or surroundings trigger the safe exit mechanism of a sensor, or the system fails.

When the adaptive cruise control function is activated, the system will notify the driver through visual and auditory alerts. The specific alert format is subject to the actual vehicle status.

When the adaptive cruise control function exceeds the system boundaries, the adaptive cruise control function will automatically deactivate and notify the driver through visual and auditory alerts. The specific alert format is subject to the actual vehicle status.

Important Instructions for Full-speed Adaptive Cruise Control System

WARNING

You should understand that adaptive cruise control system is only designed to assist the driver, so the driver is fully responsible for driving safety. Please always keep your hands on the wheel, pay attention to the road and surrounding traffic, and be prepared to take immediate action. The driver remains fully responsible for safe vehicle operation and bears all liability for driving safety.

It is your responsibility to understand the limitations of adaptive cruise control system and the situations in which it may not work as expected:

- Reaching or leaving a curve may delay or disturb target selection. In such cases, the adaptive cruise control system may not decelerate as expected or may decelerate late.
- On roads with sharp curves, such as winding roads, the vehicle ahead may be out of adaptive cruise control system sensor detection for several seconds due to sensor vision limitations, possibly causing the adaptive cruise control system to accelerate automatically.
- Traffic flow and weather conditions, such as rain and fog, must be heeded for setting vehicle distance on the adaptive cruise control system. After the adaptive cruise control system is
- properly set, the driver must be able to decelerate until the vehicle stops at any time.
- The adaptive cruise control system may not be able to identify stationary or slow moving objects, such as vehicles, the end of traffic, tollbooths, bicycles, motorcycles, or pedestrians. This means a risk of collision and requires the driver to beware of the surroundings. The adaptive cruise control system is suitable for highways and roads in good conditions, rather than complex urban or meandering roads.
- The adaptive cruise control system can only achieve limited braking instead of emergency braking.
- It is the driver's responsibility to keep distance from the vehicle ahead.

In some cases, such as when the vehicle ahead is going too slow, when lane change is too fast, or when the safe distance from the vehicle ahead is too short, there is no adequate time for the system to decrease the relative speed, so response has to come from the driver. The system cannot give audible or visual warnings in every case.

- The adaptive cruise control system cannot be activated in special driving modes, like tow/snow/mud/sand/terrain.
- Modifying the vehicle structure, such as lowering the chassis or changing the front license mounting plate, may affect the adaptive cruise control system.
- Do not use the adaptive cruise control system when visibility is poor, or when driving on slopes, winding roads, or wet roads (covered in ice/snow or flooded).
- Blockage of sensors' detection area by contaminants can disturb the intended function.
- Front sensors may have a transient function failure from limited detection if the vehicle runs under special conditions, such as circular parking lots or tunnels, for an extended period.
- Vehicle control is transferred to the driver if the accelerator or brake pedal is pressed with adaptive cruise control system activated. As a result, the adaptive cruise control system cannot keep a safe distance from the vehicle ahead.
- Detection may be affected or delayed in some environments. If the radar reflection cross-sectional area of the target (a bicycle, motorcycle, four wheeler, or pedestrian, for example) is too small, the system may not be able to establish its distance, resulting in either late or no response to those vehicles. In such cases, vehicle speed must be controlled by the driver. In addition, detection may also be affected or delayed by noise or electromagnetic interference.
- When the vehicle stops as it follows a vehicle ahead, in rare cases (eg special vehicles like empty or half loaded trailers), the

system does not recognize the end of the vehicle ahead but the lower end of the target (eg the rear axle of a truck with a high chassis or a vehicle bumper). In such cases, the system cannot ensure proper stop distance, so the driver must stay alert and be ready to brake.

- If the adaptive cruise control system is activated with the vehicle stationary, the system identifies any stationary obstacle ahead and keeps the vehicle still to ensure a safe startup and prevent collision. However, this function cannot identify all the obstacles, so the driver must be alert to the front obstacles or other traffic participants.

Due to limitations in system detection and control, the ACC cannot handle all traffic, weather, or road conditions. The driver, as the vehicle operator, must always:

- Keep hands on the steering wheel.
- Maintain continuous observation of the road and surroundings.
- Be prepared to take immediate control in hazardous situations.

Do not rely solely on this function to control the vehicle. Failure to remain vigilant may result in accidents, property damage, or personal injury.

Full-speed Driver Assistance System

Full-speed Driver assistance System

The full-speed driver assistance system works on the same basis as the adaptive cruise control system. If the lane lines ahead on both sides are clear, the system will assist the vehicle in driving within the lane lines; if there is a vehicle ahead and the lane lines are not clear, the system can assist the vehicle in following the track of the vehicle ahead.

WARNING:

The driver should adjust the vehicle speed and the following distance according to the road visibility, weather and road conditions. The full-speed driver assistance system has reduced response to pedestrians, stationary vehicles, vehicles crossing the lane or oncoming vehicles in the same lane.

If the full-speed driver assistance system cannot fully reduce the vehicle speed, the driver must apply the brake pressing depressing the brake pedal. If another vehicle cuts into the current lane under congested conditions, the system may not brake quickly enough due to the fact that the cut-in vehicle does not enter its detection range, and the driver must be prepared to take full control and actively apply the brake.

Activation and Deactivation of Full-speed Driver assistance System

When all the following conditions are met:

- The full-speed driver assistance system switch on the entertainment display is on;
- The system recognizes clear lane lines on both sides;
- The vehicle is in Drive gear;
- The electronic parking brake is released;
- Four doors , bonnet and tailgate are closed;
- The seat belt is fastened;
- The brake pedal is not pressed;
- The relevant systems are fully functional and fault free;
- The speed should be above 0 km/h if there is a vehicle ahead; the speed should be above 10 km/h if there is no vehicle ahead.

When the full-speed driver assistance function is activated, the system will notify the driver through visual and auditory alerts. The specific alert format is subject to the actual vehicle status.

When the full-speed driver assistance function exceeds the system boundaries, the adaptive cruise control function will automatically deactivate and notify the driver through visual and auditory alerts. The specific alert format is subject to the actual vehicle status.

REMINDER

The full-speed driver assistance system can be activated by fully pulling down the shift lever. After successful activation, the indicator light of the full-speed driver assistance system on the instrument pack will be illuminated, and its target speed is the actual speed at activation (if your vehicle speed is less than 30 km/h, the target speed of the system is set at 30 km/h).

If the speed of the vehicle ahead is greater than the target speed of your vehicle, your vehicle will maintain the target speed; if the speed of the vehicle ahead is less than the target speed of your vehicle, your vehicle will enter the car-following mode and follow the vehicle ahead to a stop.

If the stop time is less than 90 seconds, your vehicle will automatically start off to follow the vehicle ahead, otherwise the driver needs to restore the full-speed driver assistance system according to the instrument pack prompt; if the car-following stop lasts for more than 10 minutes, the full-speed driver assistance function will exit.

When the system detects that the driver is not holding the steering wheel continuously for a preset period of time, it will provide warnings to prompt the driver. If the steering wheel is not held for a preset period of time, the system will automatically exit and the seat belt will vibrate. If the full-speed driver assistance system needs to be activated again, please follow the prompts on the instrument pack.

Automatic Avoidance

If your vehicle detects a large vehicle in the adjacent lane of the current driving path, it can perform a slight lateral avoidance in the current lane to increase the lateral distance to a safe level.

Important Instructions for Using Full-speed Driver assistance System

WARNING:

The full-speed driver assistance system is an auxiliary system, which can provide assistance to the driver, it does NOT replace the driver. In all cases, the driver is solely responsible for the safety of the vehicle.

Due to the limitations of system detection and control when using the full-speed driver assistance system, the driver must always hold the steering wheel, pay attention to the surrounding environment of the vehicle, and correct or take over full control of the steering when necessary, otherwise accidents or personal injuries may be caused.

The full-speed driver assistance system will be limited or does not work in the following conditions:

- Full-speed driver assistance system includes adaptive cruise control function, when using full-speed driver assistance system, in addition to meeting the instructions in this section, the driver should also meet the instructions in the "Important Instructions for Full-speed Adaptive Cruise Control System" section.
- The driver presses the accelerator pedal rapidly, makes emergency steering manoeuvre or presses the brake pedal hard;
- The system recognizes that the driver does not manipulate the steering wheel for a period of time;
- When the system implements the control, the driver is manipulating the steering wheel;
- The lane line is too thin, damaged or fuzzy;
- Objects or landscape features are casting strong shadows on the lane markings, or the road surface contains pavement seams or other high-contrast lines;
- The vehicle is driving on a bend with a small curvature radius or on too narrow or too wide road;
- The vehicle has just entered the road section with lanes or has passed the road section without lane lines;
- The driver actively controls the lane change or the lateral sway is too fast;
- When driving along the track of the vehicle ahead, the turning radius of the vehicle ahead is too small;
- The anti-lock brake system (ABS) and the dynamic stability control system (SCS) are activated;
- The anti-lock brake system (ABS), dynamic stability control system (SCS), electric power steering system (EPS), etc. have failed or a fault has been detected.
- Encounter a vehicle or object which is stationary or traverses the lanes (including but not limited to traffic cones, water-filled barriers, construction warning signs, etc.);

In the following situations, the use of driver assistance system functions may be limited, and the driver should be prepared to take control of the vehicle in a timely manner:

- Driving in sports style; Driving in bad weather;
- Driving on poor road section;
- Driving through road construction site;
- When driving the vehicle on a steep, meandering road or slippery road (such as roads covered with snow or ice, a wet road, or a road with large puddles):
- When driving off-road or on an unpaved road.
- There is no centre line separation from the oncoming lane, no lane line, no lane line at the exit, roundabout, and roadside

stationary vehicles.

The driver should be prepared to take full control of the vehicle at any time in the following situations:

- In the case of increased lanes, lane merges, etc., the driver is required to take active control.
- In the case of complex traffic conditions (such as intersections, road sections with traffic congestion, etc.), the driver is required to take active control.
- When driving along the track of the vehicle ahead with the function on, the driver should pay attention to the status of vehicles on both sides and behind, and overtake the vehicle when it is safe to do so.

Due to limitations in system detection and control, the full-speed driver assistance cannot handle all traffic, weather, or road conditions. The driver, as the vehicle operator, must always:

- Keep hands on the steering wheel.
- Maintain continuous observation of the road and surroundings.
- Be prepared to take immediate control in hazardous situations.

Do not rely solely on this function to control the vehicle. Failure to remain vigilant may result in accidents, property damage, or personal injury.

Commanded Lane Change*

Commanded Lane Change

When the full-speed driver assistance system function is activated and the driver sends a lane change request through the direction indicator switch, the system achieves automatic lane change by controlling the accelerator, steering, and brakes, etc. when it is satisfied that the lane change conditions are met.

Activation and Deactivation of Commanded Lane Change

REMINDER

When the following conditions are met, the commanded lane change system will enable the vehicle to drive into the adjacent lane in the direction indicated by the lane change indicator, and display the entire process of lane change on the instrument pack:

- The full-speed driver assistance system works normally and is fault free;
- The direction indicator lamp has been turned on;
- There are no intervening obstacles in the target lane;
- The lane marking indicates that lane change is allowed (the lane line is white dashed line or white dashed and solid lines with the inside of the current lane being dashed line);
- The system can detect the outer lane line of the target lane;
- The driving speed is between 75 km/h~130km/h (the applicable speed range may vary depending on the region or software version);
- The vehicle is on a carriageway that is physically separated from the oncoming lane, and there are no pedestrians or non-motorized vehicles around.

If the system detects that there is an intervening obstacle in the target lane, or the lane line in the lane change direction is a non-white dashed line or the curvature radius of the road is too small during the lane change, it will not enter the lane change process until the lane change conditions are met.

If the following situations occur during the lane change (without crossing the original lane line), the lane change will be canceled and the vehicle will return to the original lane:

- The driver toggles back the turn signal light lever to cancel the lane change request;There is a risk of collision with the vehicle approaching from behind in the target lane;
- The lane line on the outside of the target lane cannot be detected;
- The curvature radius of the road is too small.

When the commanded lane change function is activated, the system will notify the driver through visual alert. The specific alert format is subject to the actual vehicle status.

When the commanded lane change function exceeds the system boundaries, the commanded lane change function will be cancelled and notify the driver through visual alert. The specific alert format is subject to the actual vehicle status.

REMINDER

The commanded lane change can assist in driving into one lane at a time. To change lanes again, the direction indicator lamp should be enabled again after completing the first lane change.

If the driver operates the steering wheel or presses the brake pedal during the lane change, the lane change will exit.

Important Instructions for Using Commanded Lane Change

WARNING

The commanded lane change system is an auxiliary system, which can provide assistance to the driver , it does NOT replace the driver. In all cases, the driver is solely responsible for the safety of the vehicle. Due to the limitations of system detection and control when using the commanded lane change system, the driver must always hold the steering wheel, pay attention to the surrounding environment of the vehicle, and correct or take full control of the steering when necessary, otherwise accidents or personal injuries may be caused.

The commanded lane change system involves full-speed driver assistance function. Therefore, all instructions and restrictions related to full-speed driver assistance function in this handbook (please refer to "Important Instructions for Using Full-speed Driver Assistance System") must be followed during use.

When changing lanes using Commanded Lane Change, It is the driver's responsibility to determine whether a lane change is safe and appropriate. Therefore, before initiating a lane change, the driver should always check blind spots, lane markings, and the surrounding roadway to confirm it is safe and appropriate to move into the target lane.

If the light or visibility is poor at night or the lane lines are not clear, the lane change may not be activated.

If the camera is blocked or dirty, the ambient brightness changes suddenly, the camera mounting position is changed, or the camera view is reduced or obscured by bad weather such as heavy rain or snow, the lane change cannot be activated.

The commanded lane change may not recognize special vehicles, such as vehicles with the rear blocked or with irregular shape, vehicles with a rear vertical surface below a certain height, empty cargo transport vehicles and may miss stationary or slow-moving vehicles. Special attention must be paid to special scenarios such as night time driving or adverse weather conditions.

Please do not use the commanded lane change system in special or complex road conditions, including but not limited to:

- Tunnel entrances and exits.
- Upstairs and downstairs roads, bumpy roads, winding roads, sharp turn roads, narrow roads, non-standard roads, roads without central isolation belts.
- Pedestrian, bicycle, electric vehicle or animal-intensive traffic conditions.
- Water, mud, potholes, ice and snow, collapsed road surfaces, speed-reducing road surfaces, obstacle-filled road surfaces.
- Complex and changing traffic conditions, such as busy intersections, highway ramps, congested roads, etc.

The commanded lane change system may fail to detect or incorrectly detect obstacles in the target lane and the current lane. The driver must confirm whether the lane change is safe and suitable before and during the lane change. The following targets may not be recognized or may be responded to, including but not limited to:

- Vehicles cutting in from the side.
- Motorcycles, tricycles.
- The following targets will not be responded to, including but not limited to:
- Bicycles, oncoming vehicles.
- Pedestrians, animals, traffic lights, roadblocks, walls, and other non-vehicle objects.

Lane Keeping Assist (LKA)

Lane Departure Assist System

NOTE: The lane departure assist system switch is located on the central screen. The system can be turned on/off in the appropriate interface under "ADAS", and the mode selection can be made.

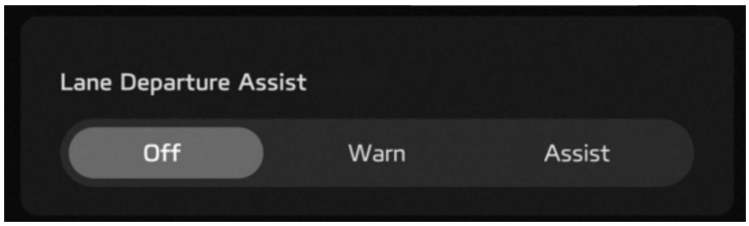

REMINDER

The system detects the lane lines ahead when the following detection conditions are met:

- The function is in ON state;
- The vehicle speed is above 60 km/h;
- The lane lines are clear, and the system detects the lane lines on both sides.

REMINDER

When the wheel is about to cross the lane line or has already crossed the lane line, the system will provide warnings to remind the driver to correct the direction in time and keep the vehicle running within the lane lines. The function will exit when the speed drops below 55 km/h.

When the vehicle deviates from the lane for the first time, the system does not sound an alarm, only an visual alarm. When there is a subsequent lane departure, there will be an audible alarm, and the more frequent the deviation, the longer the alarm will sound.

If the vehicle is about run on the solid lane line or drive into the kerb, the system will assist the driver in keeping the vehicle traveling within the lane lines by applying corrective steering intervention and prompting. If the vehicle deviates too much from the lane line, the warning function will be triggered at the same time.

The instrument cluster displays the lane departure assist system status indicator as below:

System status Indicator	
Grey	The function is in standby state.
Green	The function is active.
Yellow	The function is off or faulty.

When lane departure warning system activates, the corresponding lane marking turns red (displayed on the instrument cluster)

When lane departure prevention system activates, the corresponding lane marking turns blue (displayed on the instrument cluster)

The specific alert format is subject to the actual vehicle status.

Emergency Lane Keeping*

Emergency Lane Keeping (ELK) refers to real-time detection of lane lines/road edges/vehicles through visual perception, thereby monitoring the relation between your vehicle within the lane and the lane lines, road edges, as well as the relative position to the surrounding vehicles. In cases where a lane departure is caused to your vehicle by driver inattention, the ELK system prevents the vehicle from crossing over the road edge or colliding with an oncoming vehicle, or a following vehicle in the adjacent lane, by providing steering assistance to the driver.

NOTE: The ELK system switch is located on the central display, and the ELK system can be turned on/off by accessing the corresponding intelligent driving interface.

REMINDER

The ELK function can be activated when the following conditions are met:

- The ELK soft switch on the entertainment screen is in the ON state;
- The system detects that the lane lines on both sides are solid lines or curbs;
- The vehicle is powered on and ready;
- The vehicle network status is good;
- The vehicle is in Drive (D) gear;
- The relevant systems are functioning normally and are fault free;
- The vehicle speed must be above 60 km/h and below 150 km/h.
- Your vehicle is at risk of departure from the lane line, about to cross over the road edge, or potentially colliding with an oncoming vehicle from the rear in the adjacent lane.

If the exit conditions are satisfied, the system status Indicator will display in grey.

The instrument cluster displays the lane departure assist system status indicator as below:

System status Indicator	
Grey	The function is in standby state.
Green	The function is active.
Yellow	The function is off or faulty.

When ELK system activates, the corresponding lane marking turns red (displayed on the instrument cluster)

The specific alert format is subject to the actual vehicle status.

WARNING

The emergency lane keeping system is an auxiliary system that can assist the driver, but cannot replace the driver in driving. When choosing to use the emergency lane keeping system, drivers need to always concentrate their full attention, hold the steering wheel, and be ready to correct direction or take over the vehicle; otherwise accidents or personal injuries may occur.

The emergency lane keeping system may not always recognize lane markings or road edges, and may sometimes mistake poor quality road surfaces, certain road structures, or objects for lane markings or road edges.

When encountering situations such as lane addition or merging, the driver needs to take active control.

When encountering complex traffic environments such as intersections, congested road sections, etc., drivers need to take active control.

The emergency lane keeping system is limited or non functional in the following situations:

- The driver operates the direction indicator;
- The driver turns on the hazard warning lights;
- The driver suddenly applies the accelerator pedal, turns sharply, or stamps on the brake pedal;
- The lane markings are too thin, damaged or blurred;
- Driving in darkness at night or with poor lighting;
- Irregular or damaged roadside lines/kerbs/marking;
- Vehicles are driving on bends with small curvature radii, narrow or wide roads;
- The vehicle changes lanes or swings laterally too quickly;
- Vehicle speed is below 55 km/h, or vehicle speed is too high;
- The anti lock braking system and dynamic stability control system are in an activated state;
- The anti lock braking system, dynamic stability control system, electric power steering system, etc. are inoperative or have detected a fault;
- Pedestrians, animals, and specialty or specially-shaped vehicles;
- Dirty or fogged front windshield, or blocked sensors;
- The sensors come off, are loosely installed, or are blocked;
- Glaring from direct sunlight, reflection in puddles, or oncoming vehicles;
- Sudden changes in light, such as when the vehicle is entering or exiting a tunnel;
- Lane lines obscured by tree shadows on roads in direct sunlight on sunny days;
- Unidentifiable road boundary with grass, soil, or curb.

WARNING

The driver should disable the emergency lane keeping system in the following situations:

- When driving a vehicle in a highly sporty style;
- When encountering adverse weather conditions;
- When driving on poor quality roads;
- When driving past a construction site or roadworks.

Important Instructions for Using Lane Departure Assist System

WARNING

The lane departure assist system is an auxiliary system, which can provide assistance to the driver, it does NOT replace the driver. When using the lane departure assist system, the driver must always pay full attention, hold the steering wheel, and be prepared to correct the steering wheel or take full control of the vehicle at all time, otherwise accidents or personal injuries may be caused.

The lane departure assist system cannot always recognize the lane lines or kerbs, and sometimes may incorrectly recognize poor road surfaces, certain road structures or objects as lane lines or kerbs.

In the case of increased lanes, lane merges, etc., the driver is required to take active control.

In the case of complex traffic conditions (such as intersections, road sections with traffic congestion, etc.), the driver is required to take active control.

WARNING

The lane departure assist system function will be limited or does not work in the following conditions:

- The driver operates the direction indicator switch toward the side across the line;
- The driver turns on the hazard warning lights;
- The driver presses the accelerator pedal rapidly, makes emergency steering or presses the brake pedal hard;
- The lane line is too thin, damaged or fuzzy;
- At night or poor lighting;
- The kerbs are irregular or damaged;
- The vehicle is driving on the bend with a small curvature radius or on too narrow or too wide road;
- The vehicle has just entered the road section with lanes or has passed the road section without lane lines;
- The vehicle makes rapid lane change or lateral sway;
- The vehicle speed is below 55 km/h, or the speed is too high;
- The anti-lock brake system (ABS) and the dynamic stability control system (SCS) are activated;
- The anti-lock brake system (ABS), dynamic stability control system (SCS), electric power steering system (EPS), etc. have failed or a fault has been detected;
- Pedestrians, animals, and specialty or specially-shaped vehicles;
- Dirty or fogged front windshield, or blocked sensors;
- The sensors come off, are loosely installed, or are blocked;
- Glaring from direct sunlight, reflection in puddles, or oncoming vehicles;
- Sudden changes in light, such as when the vehicle is entering or exiting a tunnel;
- Lane lines obscured by tree shadows on roads in direct sunlight on sunny days;

- Unidentifiable road boundary with grass, soil, or curb.

WARNING

The driver should turn off the lane departure assist system in the following situations:

- Driving in sports style;
- Driving in bad weather;
- Driving on poor road section;
- Driving through road construction site or roadworks.

Forward Collision Assist System

Forward Collision Assist System

NOTE: The forward collision assist system switch is located on the central screen. The system can be turned on/off in the appropriate interface under "ADAS", and the relevant settings can be made.

Forward collision assist system functionality includes forward collision warning and automatic emergency braking (AEB).



REMINDER

Some models do not have the AEB function, the picture is for reference only, please refer to the actual car.

When the system detects a risk of collision between your vehicle and the vehicle ahead in the current lane or moving pedestrians, it will provide an alarm to remind the driver to decelerate immediately (or automatically enable the brake system to slow down the vehicle to avoid collision or mitigate the damage of the collision. If the vehicle is braked to stop, it will hold the vehicle stationary for a short time, then the control of the vehicle will be handed over to the driver)*.

REMINDER

The system will automatically slow the vehicle down only when the following conditions are met:

- The dynamic stability control system (SCS) and traction control system (TCS) are ON and no faults are detected;
- The vehicle is in Drive or Neutral gear;
- The airbags are not deployed.

When the function is activated, there will be a pop-up prompt and an alarm sound prompt.



When the function ends the pop-up will disappear.

When vehicle speed is less than 8km/h, the forward collision assist function cannot be activated.

If the forward collision assist function fails, the AEB fault lamp will light up on the instrument panel.



When the AEB function exits or is deactivated, the AEB pop-up window will disappear.

In some cases, the driver may not want the function to apply the brakes, but if the forward collision assist system is applying a strong brake force, the driver can temporarily cancel the system by firmly pressing the accelerator pedal or turning the steering wheel if it is safe to do so.

Important Instructions for Using Forward Collision Assist System

WARNING

The driver is responsible for the safety of the entire driving process, and must pay full attention and drive carefully even if the vehicle is equipped with forward collision assist system. As a driver assistance system, the forward collision assist system cannot prevent accidents and avoid collisions in all situations.

Due to the limitations of system detection and control when using the forward collision assist system, the driver must always hold the steering wheel, pay attention to the surrounding environment of the vehicle.

The driver must always observe the road conditions so as to avoid the accidents or emergency situations. In all cases, the driver is solely responsible for the safety of the vehicle.

The forward collision assist system cannot ensure zero collision. The system cannot completely protect pedestrians or avoid accidents and severe injuries on its own. Do not overly rely on the forward collision assist system as this may result in severe injuries or deaths. The system is only an auxiliary safety tool. The driver must always keep a safe distance from vehicles ahead, control the speed, and be ready to brake or steer away when necessary. The driver must keep control of the vehicle at all time and be fully responsible for safe driving.

WARNING: Application of the emergency braking function within forward collision assist system may cause injuries to the occupants, therefore, always drive with care and turn off the forward collision assist system when the vehicle is being towed.

WARNING: To avoid the occurrence of accidents, never test the functions of the forward collision system.

WARNING

The forward collision assist system will fail to work if:

- Any door is not closed or it is opened when the vehicle is moving;
- The seat belt is not fastened or it is unfastened when the vehicle is moving;
- The driver accelerates or decelerates rapidly or turns the steering wheel quickly;
- The vehicle is on a sharp curve.

The forward collision assist system function will be limited or does not work in the following situations:

- There is oncoming traffic, the vehicle ahead drives across transversely or cuts in suddenly;
- The vehicle ahead does not follow the rules of driving (for example, driving across lanes) and parking (on the roads transversely);
- The vehicle ahead is not on the same lane of this vehicle or is partially blocked;
- The vehicle ahead is a non-standard motor vehicle (for example, a refitted vehicle);
- The vehicle ahead is a vehicle with high chassis.
- The vehicle ahead is a large vehicle and at a close distance (such as a tractor, a trailer, a towing vehicle, a mud-carrying vehicle and a sanitation truck);
- The vehicle ahead is some means of transportation rarely can be seen on the road (such as the ox cart, carriage or others);
- The vehicle ahead is a bicycle, motorbike or small wheeled object (such as suitcases, shopping carts or wheelchairs);

- The contour of the vehicle ahead is unclear due to the water sprayed by the wheels of the surrounding vehicles;
- The vehicle ahead does not turn on the tail lamps when driving at night or in the tunnel;
- The tail lamps of the vehicle ahead are all LED lamps or other home-made lights;
- When driving on the street, the road lamps flash erratically;
- The pedestrian is not directly in front of the vehicle or not fully visible;
- The pedestrian does not stand upright or is a shorter child;
- A crowd of people or the pedestrian is in the tree shadow or in the dark;
- There is an animal ahead;
- There are foreign obstacles on the ground ahead (such as a roadblock, an isolation pile, an isolation strip, big rocks, other scattered objects, etc.);
- There are signs, guardrails, bridges, buildings, etc. ahead;
- The vehicle drives on a slope, the section coming on/off the bridge or curve;
- The vehicle is in Reverse gear;
- The vehicle is in braking or harsh acceleration state;
- In complex traffic, the system cannot always clearly identify all the vehicles or pedestrians. It may trigger unnecessary warning or braking action for well covers, iron plates or road signs.

System performance may be reduced in the following cases:

- Strong front bumper impact from accidents or other causes;
- Improperly inflated or worn out tires;
- Unqualified tires installed;
- Snow chains installed;
- Use of a small spare tire or tire repair kit.

Driver Monitoring System

Driver Monitoring System

The Driver Monitoring System (DMS) camera is situated on the A-pillar trim panel on the driver side.

The Driver Monitoring System can identify the driver's fatigue and distraction states via the camera, and remind the driver accordingly based on the identified levels of fatigue and distraction.

If the Driver Monitoring System is unavailable, a text popup "The Driver Monitoring System is currently unavailable" will appear on the instrument screen. During this process, the malfunction indicator light for the driver monitoring function will also illuminate.

Function ON:

NOTE: Turn on or off the corresponding function by clicking [Vehicle Settings - ADAS - Driver Distraction Warning/Driver Fatigue Warning].

When the function is on, the system will maintain a monitoring state and alert appropriately when the vehicle speed reaches 10 km/h and above.

Function Activation:

When the function switch is on and the vehicle speed requirements are satisfied:

When the driver feels drowsy, yawns, or closes his/her eyes, the system will intelligently judge the driver's fatigue level based on the driver's state and automatically display an alert on the instrument pack.

When the driver is distracted, or does not pay full attention, the system will intelligently judge the driver's distraction level based on the driver's state and automatically display an alert on the instrument pack.

Function Silent/Exit:

When the following conditions occur, the function will operate silently without any alerts:

The driver disables the DMS fatigue alert or the DMS distraction alert;

When the direction indicator switch is activated, the distraction alert will be silent while the fatigue alert will still prompt.

When the following conditions occur, the function will be exited:

- Driver's operation

  - Speed is below 8 km/h

  - The vehicle is not in D Gear

- DMS camera is obstructed

- System failure and other anomalies

WARNING

The driver monitoring system is only an auxiliary driving tool. Under all circumstances, the driver must be responsible for the safety of the vehicle. Fatigue driving and distracted driving are strictly prohibited. The driver must always concentrate on driving carefully.

When the driver feels tired, he/she should stop driving as soon as possible and take a proper rest.

The driver monitoring system is only an auxiliary system and is not capable of effective recognition and alarm-raising in all situations. The driver monitoring system cannot completely replace the driver's subjective observation and judgment. The driver must maintain control of the vehicle at all time, complying with all traffic laws and regulations, and taking full responsibility for the vehicle.

When the system prompts that the DMS function is restricted and it is hard to identify the driver's eyes, it indicates that the function is in a restricted state. Please remove obstructions such as sunglasses to ensure that the driver’s eyes can be identified or contact an Authorized Repairer.

Break-down

Hazard Warning Device

Warning Triangle

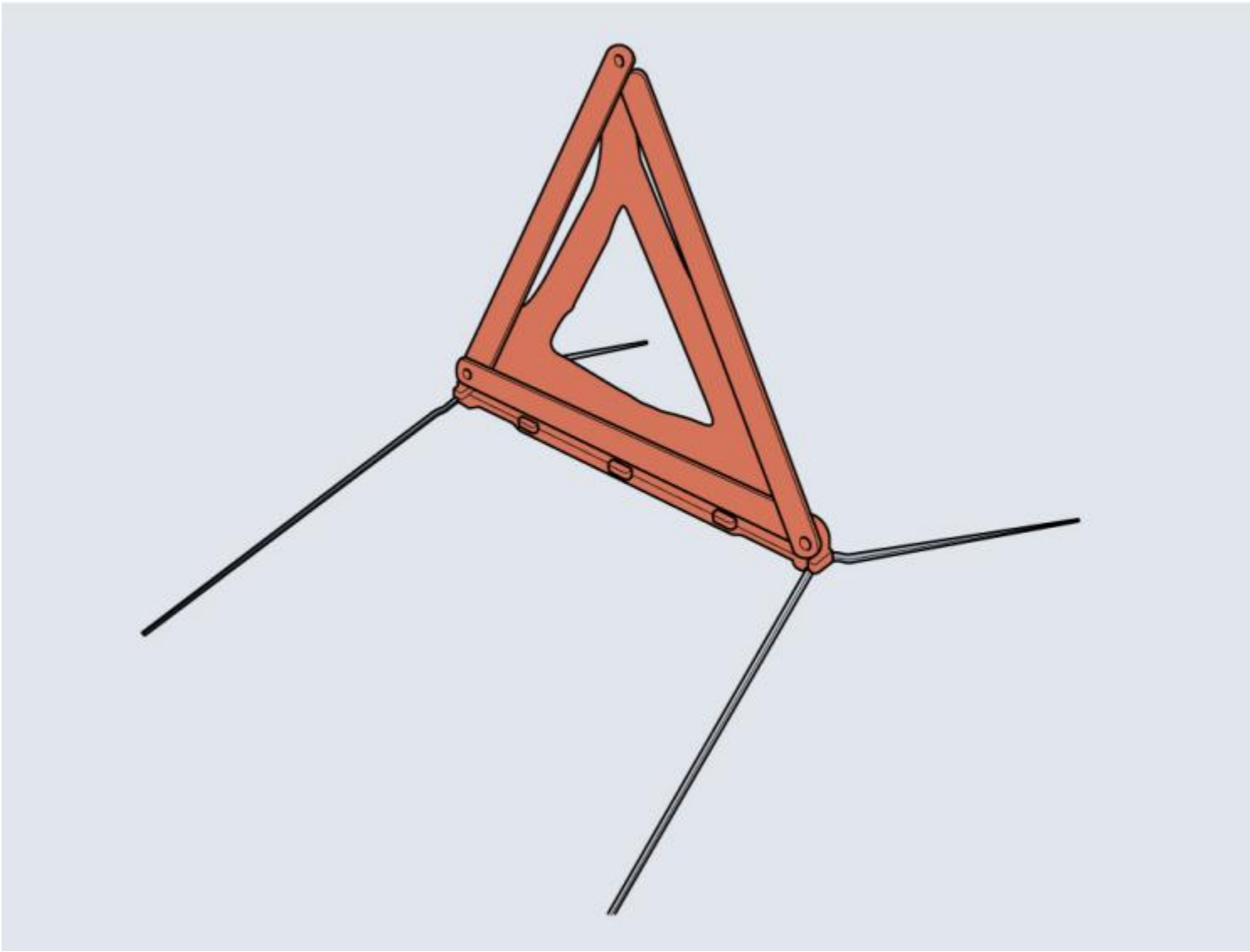

The triangular warning sign is placed in the rear storage box.

If you have to stop your vehicle on the roadside in an emergency, you must place a warning triangle approximately 50 to 150 metres behind the vehicle if possible, and press the hazard warning lamp button to warn other road users of your position.

Jump Start

Warning: NEVER start the vehicle by pushing or towing.

Warning: Make sure that BOTH batteries are of the same rated voltage (12V), and that the jumper cables are approved for use with 12V car batteries.

Warning: Ensure there are no sparks or naked flames in the front compartment.

Warning: Ensure that jumper cables are securely connected and do not touch each other or other moving parts, otherwise this could cause sparks and could lead to fire or explosion.

Warning: It is prohibited to perform a jump start operation using a normal gasoline vehicle, this may cause damage to the LVBM.

In cases of a low or flat battery, the vehicle can be started by using a jumper cable to connect the battery of another vehicle or connecting the battery external power source.

Make sure that the vehicle is powered off and all electrical appliances of the vehicle are turned off, then follow the instructions below:

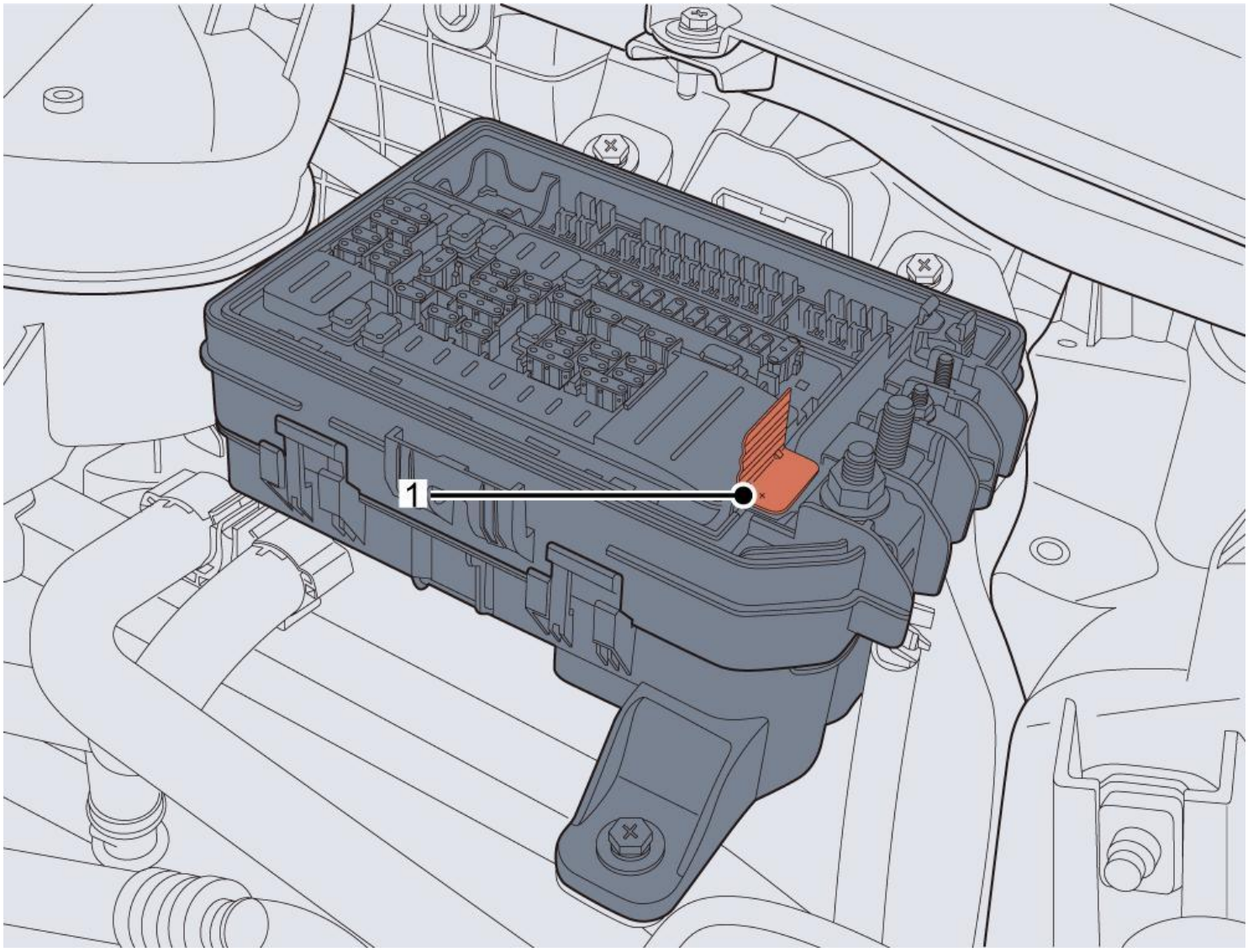

1. Connect a red jumper cable between the positive (+) terminals of both batteries. If the tailgate of the disabled vehicle cannot be opened, then the positive jumper point in the front compartment fuse box (as shown 1 in Figure) can be used as the positive terminal of the battery.

2. Connect the black jumper cable from the negative (-) terminal of the donor vehicle battery to a good earth point (such as the crossbeam or other unpainted surface) on the disabled vehicle, and try to keep it well away from the battery, avoiding brake pipes etc.

3. Start the donor vehicle and allow it to run for a few minutes.

4. Power up the disabled vehicle. If the disabled vehicle will not power up after several attempts, it may need to be repaired. Please contact an Authorised Repairer for assistance.

5. After the disabled vehicle has powered up, leave it in the READY mode for more than 30 minutes before turning the start switch of the donor vehicle off and disconnecting the jumper cables.

6. Disconnect the jumper cables. Disconnecting the jumper cables must be an exact reversal of the procedure used to connect them, i.e. disconnect the black negative jumper cable from the earth point on the disabled vehicle FIRST.

IMPORTANT
NEVER turn on any electrical equipment on the disabled vehicle before removing the jumper cables.

Note: It is recommended to turn off comfort appliances such as lights and air conditioners after powering the disabled vehicle, and keep the vehicle powered for 1 to 2 hours to restore the battery power. If the vehicle is still unable to power up normally after fully charged, please contact an Authorised Repairer for repair.

Towing and Shipping

Towing hook

Warning: Do not tow the vehicle with all four wheels on the ground. Suspended towing or trailer is the only recommended method, and auxiliary wheels should be used to keep the wheels off the ground during suspended towing, otherwise the electric drive unit may be damaged. When pushing or towing the vehicle from a dangerous situation or onto the transporter, the speed must remain below 3 mph (5 km/h) and be completed within 3 minutes.

Warning: When towing the vehicle with the towing hook, the driver side seat belt should be inserted into the buckle and maintained in this state, ensure N gear is selected and release the EPB, otherwise the vehicle may be damaged.

Warning: DO NOT use a twisted tow rope, otherwise the towing hook may be loosened.

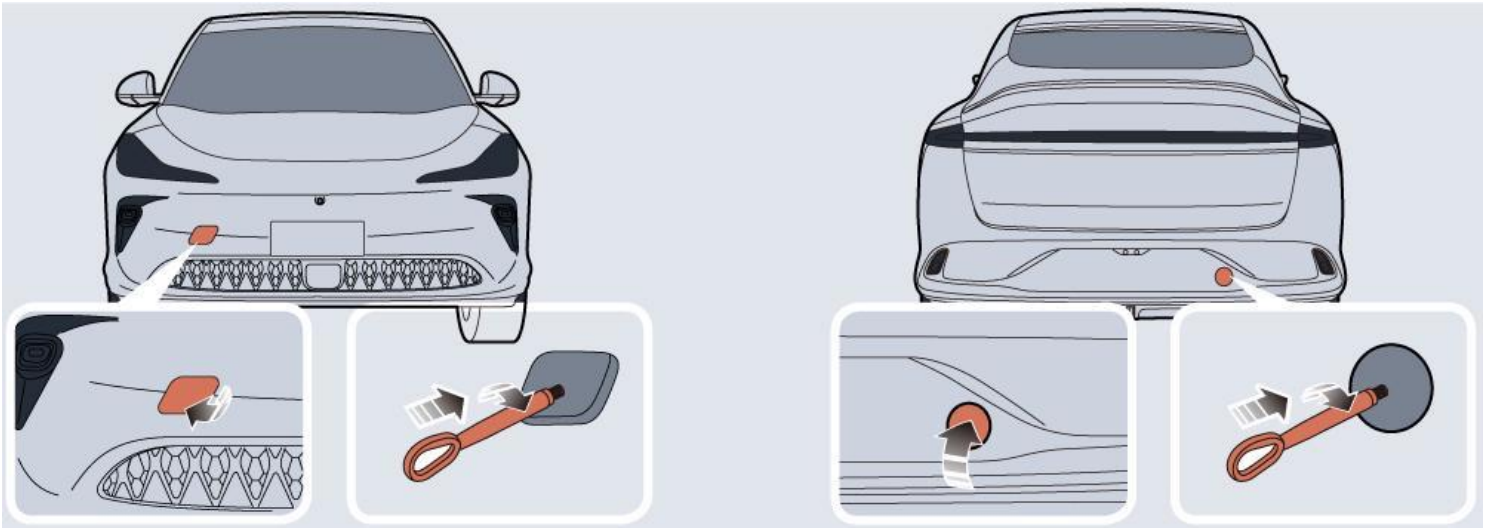

Your car is equipped with 2 towing eyes (located at the front and the rear of the vehicle), which are used for fitting the towing hook in the trunk. To fit the towing hook, remove the small cover set into the bumper, first press one end of the small cover plate, open the small cover plate in the direction as shown after the other end is lifted, and then screw the towing hook via the small hole into the threaded hole in the bumper beam (as shown in the figure). Ensure the towing hook is fully tightened!

Note: The removed cover plate is connected to the bumper by a plastic strip.

In cases where your vehicle broken down or been involved in an accident, you can use the towing hook to tow your into a safer location or onto a transporter. But they are not designed for towing other vehicles. It is recommended to tow the vehicle using a solid rod, and if it is not available, a soft rope may be used.

Suspended Towing

When using the suspended towing method, auxiliary wheels should be used to keep the driven off the ground, otherwise the electric drive unit and other components may be damaged due to the driven wheels being in contact with the ground. When towing, the hazard warning lamps must be turned on and no passengers should be left in the vehicle being towed, otherwise the vehicle damage or personal injury may occur.

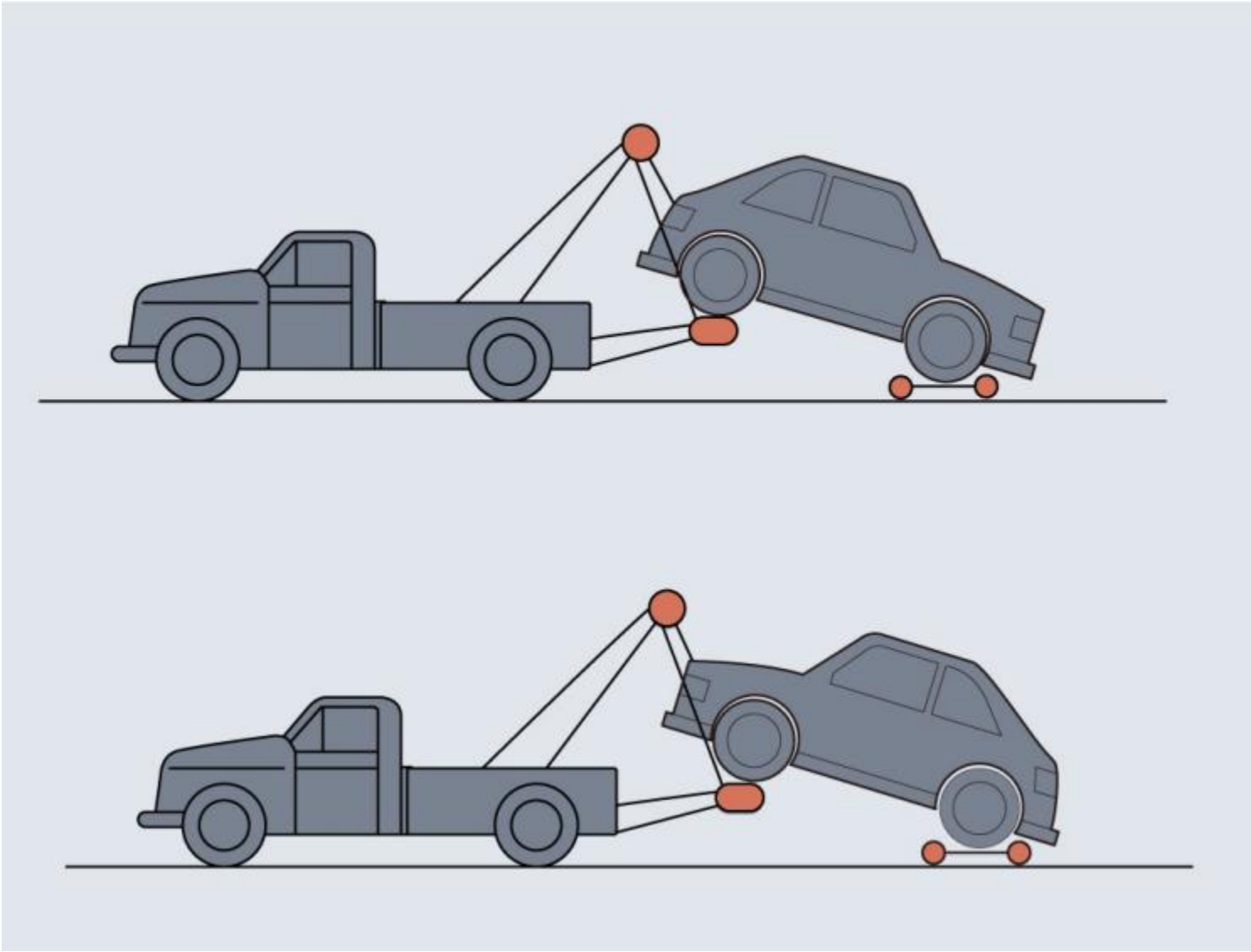

DO NOT tow the vehicle with all four wheels on the ground. Use only suspension towing or trailer, or the transmission may be damaged. When pushing or towing the vehicle from a dangerous situation or onto the transporter, the speed must remain below 3 mph (5 km/h) and be completed within 3 minutes.

When towing the vehicle, DO NOT suddenly accelerate or brake suddenly, this can cause accidents.

DO NOT tow the vehicle with its driven wheels rotating on the ground, otherwise the drive motor may be damaged.

When using suspended towing method, be careful not to allow the high-voltage battery pack to touch the ground.

Vehicle Transport

If your vehicle needs to be transported, a special transporter is recommended. Secure the vehicle on the transporter as follows:

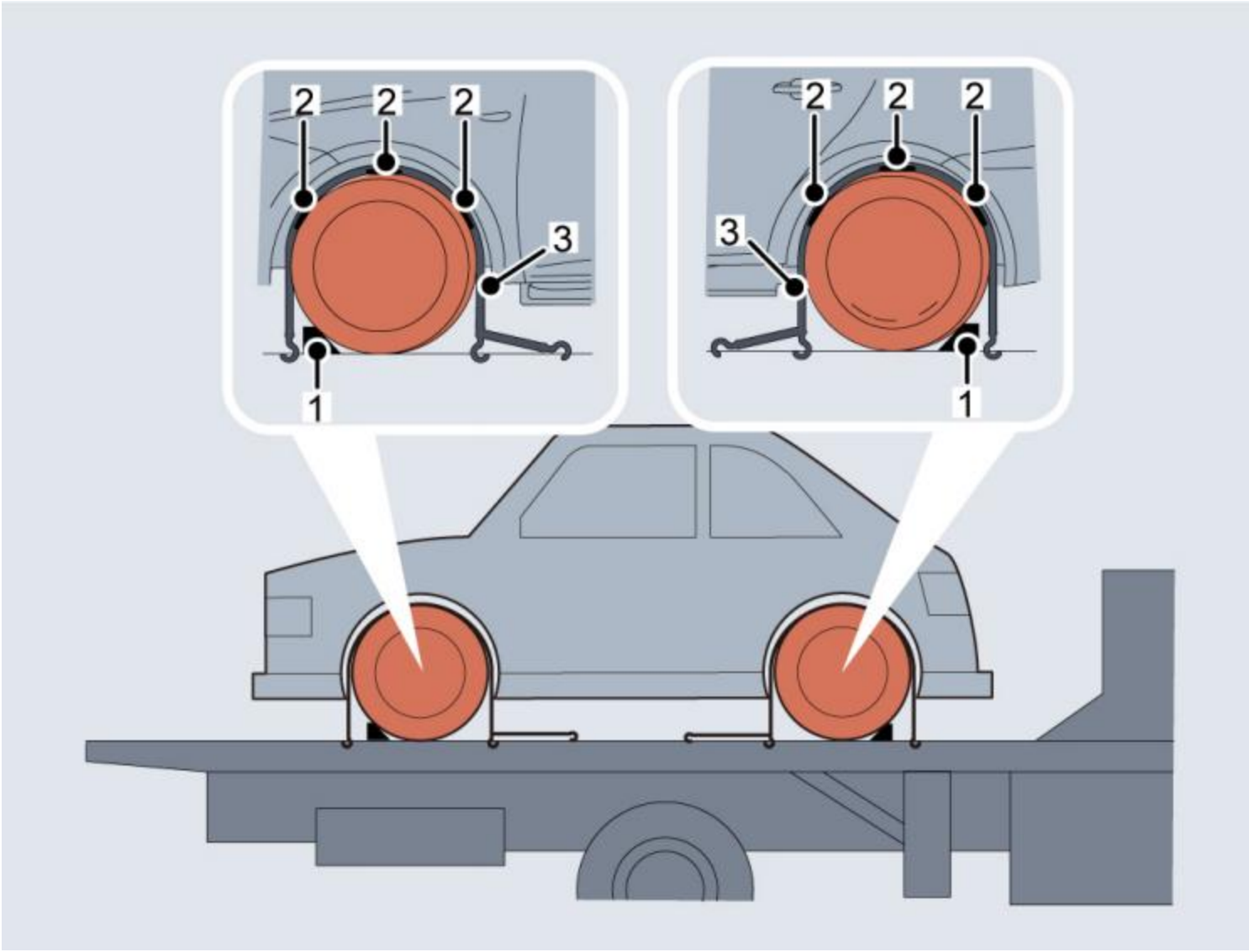

1. Before transporting the vehicle, make sure that the electronic parking brake system (EPB) is enabled. Refer to "Electronic Parking Brake System (EPB)" in "Braking and Parking" chapter for details.

2. Place the wheel chocks (1) as shown in the figure, and then position the anti-slip rubber blocks (2) around the wheel.

3. Fit the lashing straps (3) around the wheels and secure them on the trailer. Fasten the straps to secure the vehicle.

Tyre Repair*

Tyre Repair Tool

Certain models are supplied with with tyre repair fluid and electric inflator pump, which are located in the front compartment. Users may access these tools by opening the bonnet and pulling the handle of the toolbox cover.

The towing eye is stored in the tool compartment holder, and access to the tools can be obtained by opening the tailgate and lifting the loadspace floor cover carpet.

The Wheel Bolt Cap Removal Tool is stored in the armrest cubby box.

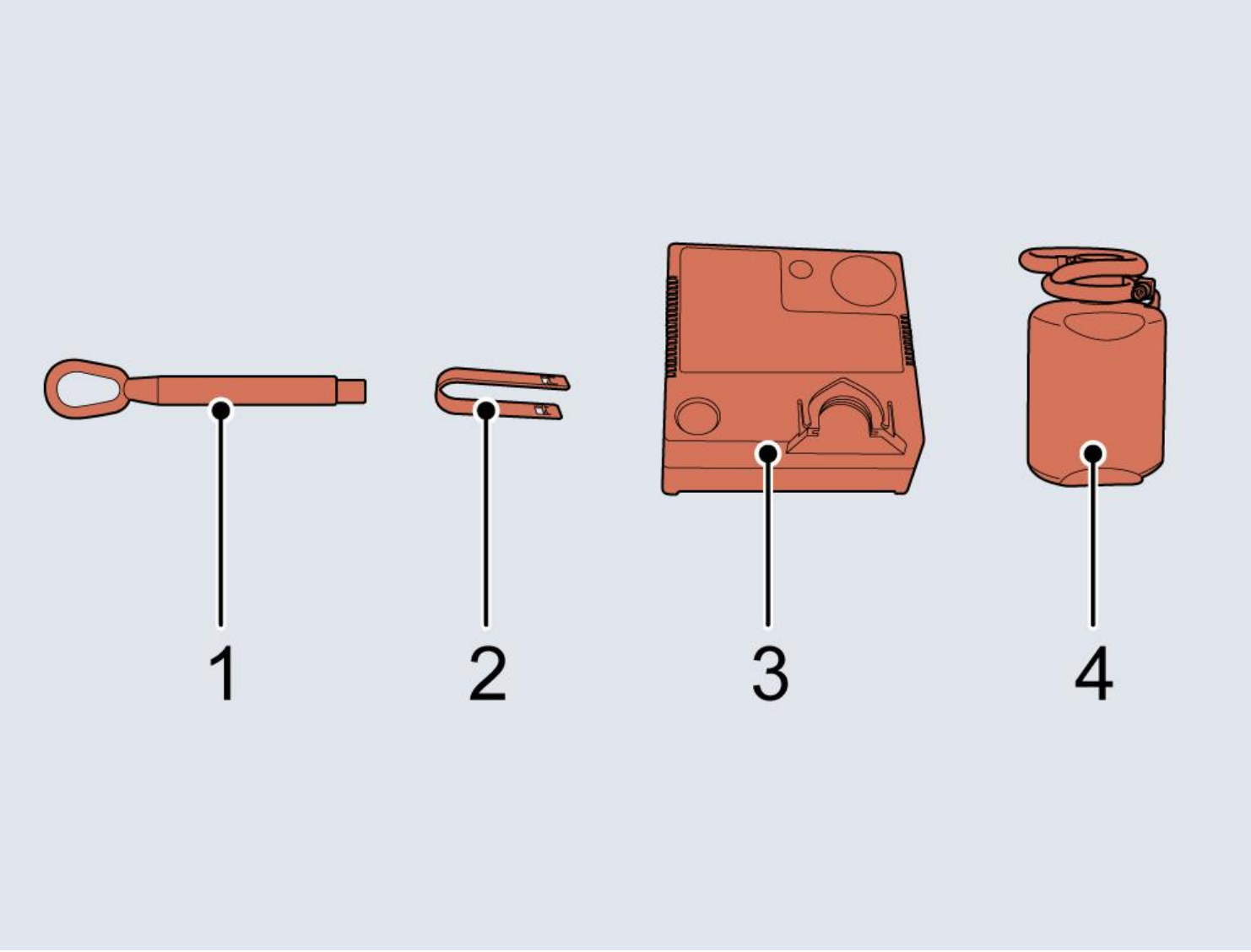

1. Towing Eye

2. Wheel Bolt Cap Removal Tool

3. Electric Inflator Pump

4. Tyre Repair Fluid

Tyre Repair Procedure

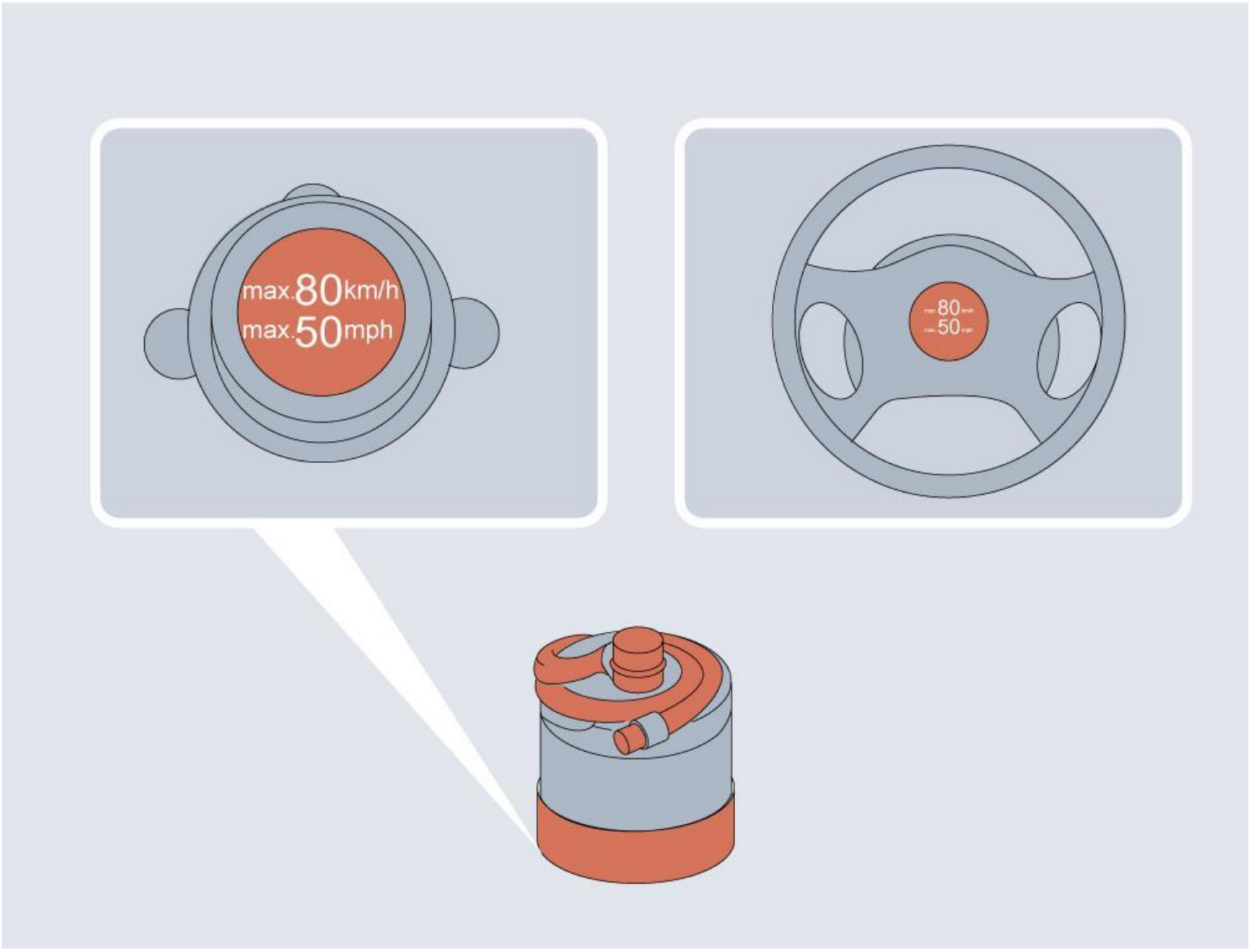

1. Remove the label from the bottom of the repair liquid bottle and affix it to the car's steering wheel as a reminder to the driver not to exceed a speed of 50 mph (80 km/h) while driving.

2. Connect the air hose end of the electric air pump to the repair fluid bottle. Install the repair liquid bottle upside down in the slot on the electric air pump. Unscrew the valve dust cap of the damaged tire and connect the repair fluid bottle hose connector to the tire valve. Check that the electric inflator power switch is off ("O" is pressed), then connect the electric inflator plug to the 12-volt electrical outlet to keep the vehicle powered on.

Note: To prevent overdischarge of the battery, it is suggested to place the vehicle in READY mode.

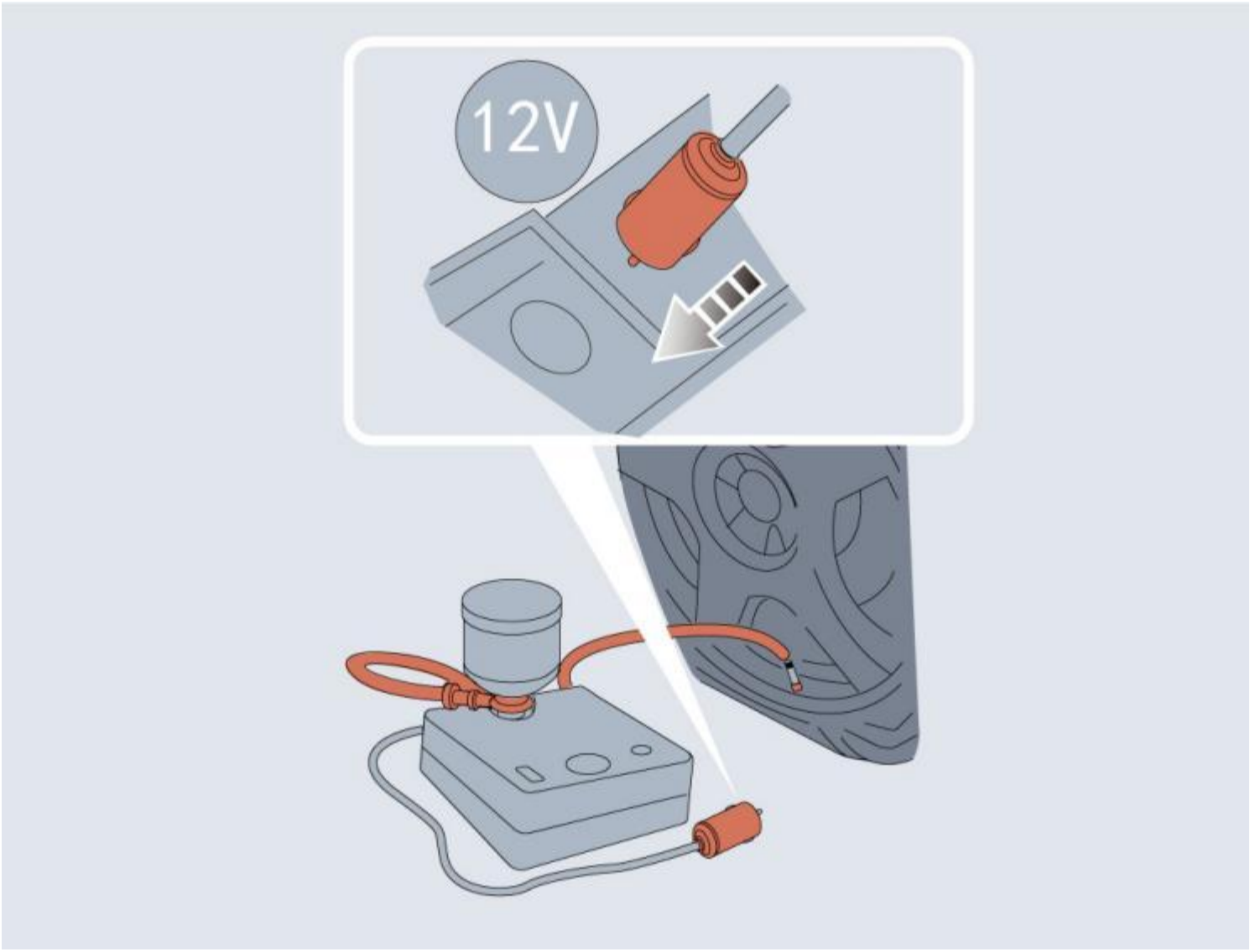

3. Switch on the power switch of the electric air pump (i.e., press "—"), and begin refilling tyre sealant. It takes about 30 seconds to drain the repair fluid reservoir. About 5 to 10 minutes are required for the tyre to reach the specified pressure.

Note: When the electric air pump works, the pressure gauge may briefly reach 600 kPa (i.e., 6 bar), and then the pressure begins to drop to normal.

4. When the specified pressure is achieved, please turn off the electric air pump (i.e., press "O").

Note: If the specified tyre pressure is not reached within 10 minutes, please remove the tyre repair kit and move the vehicle for a distance equal to one revolution of the tyre before re-inflating it. If the specified pressure is still not achieved, it indicates that the tyre has been severely damaged and beyond repair; please contact an Authorised Repair for assistance.

Note: Continuous operation of the electric air pump for more than 10 minutes may lead to motor overheating and damage.

Note: It is prohibited to power on/off the electric air pump for several times consecutively.

5. Remove the repair fluid reservoir from the slot and disconnect the hose of the reservoir from the tyre valve. Remove the plug of the electric air pump from the 12V power socket, and place the tyre repair tool into the front compartment storage box.

6. Drive the vehicle within 1 minute upon the completion of above operations to ensure even distribution of the sealant inside the tyre, with a driving speed not exceeding 50 mph (80 km/h) and a distance no more than 3.1 mi (5 km). Then stop and check the tyre pressure after driving.

If the tyre pressure is less than 11.6psi (0.8 bar), it indicates that the tyre has been severely damaged and beyond repair. Please contact the After-sales Repair for inspection.

If the tyre pressure is between 11.6psi (0.8 bar) and the specified pressure, an electric air pump should be used to inflate the tyre to the specified pressure. Repeat Step 6.

If the tyre pressure equals the specified pressure, you may continue driving, but the speed shall not exceed 50 mph (80 km/h) and the distance shall not exceed 124 miles (200km).

Note: Your vehicle is equipped with noise reduction tyres, repairs are limited and must be carried out using specialist equipment and repair methods.

Note: The tyre repair tool is only applicable to tyre damage caused by pins with a diameter not exceeding 6 mm, and it can only be used for temporary repairs in the areas shown below.

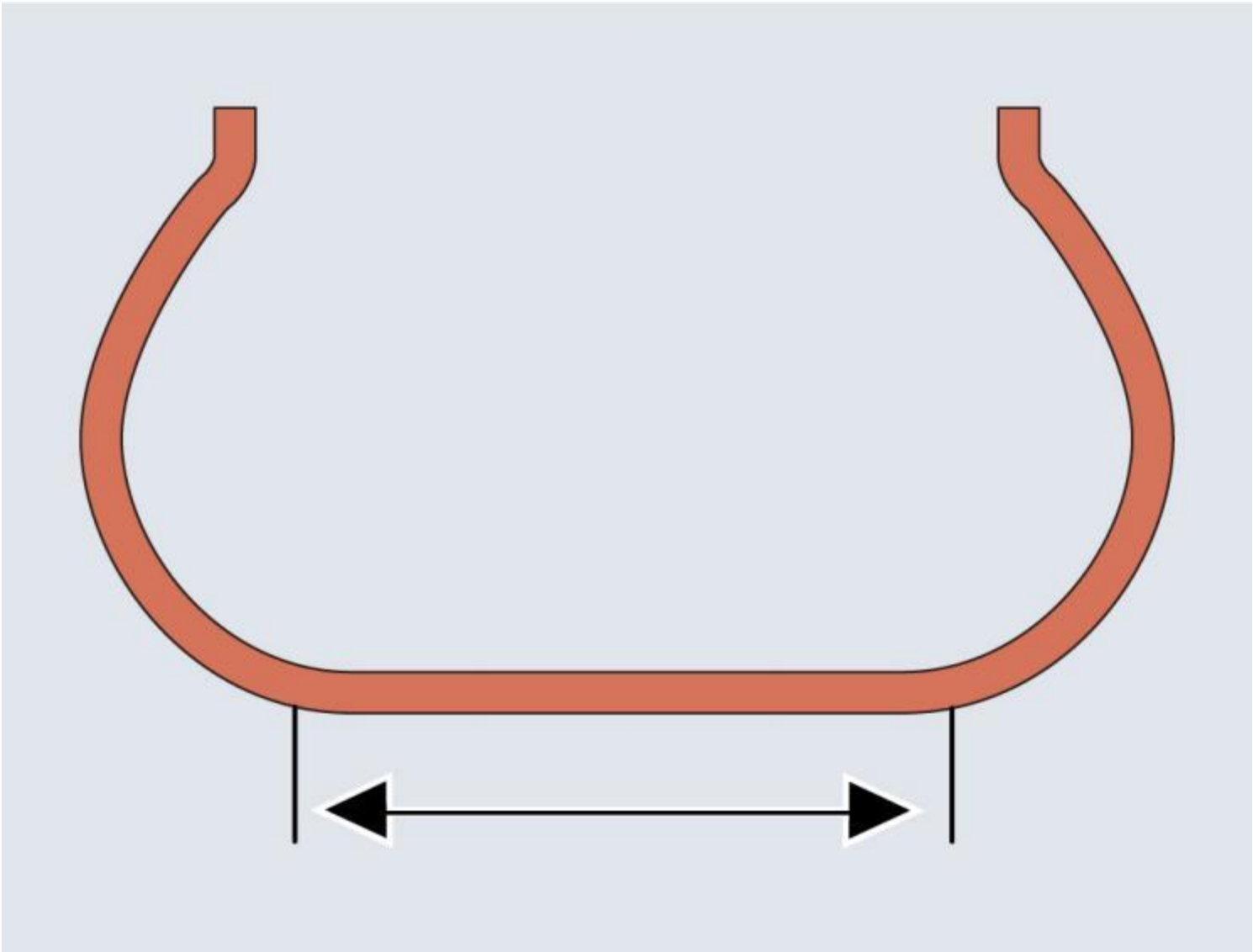

Changing a Wheel*

Spare Wheel

The vehicle is equipped with spare wheel.

The spare tyre is located at the rear of the trunk, which is visible by opening the tailgate.

Tyre Change Tool

Some configurations of this model are equipped with a jack, jack handle, and wheel spanner. The tools are arranged in the front compartment, and are easily accessible by opening the bonnet and pulling the handle of the toolbox cover.

The towing eye is located in the toolbox in the rear compartment, and is easily accessible by opening the tailgate and removing the trunk carpet.

The wheel tightening bolt cap removal tool is located in the centre console armrest box.

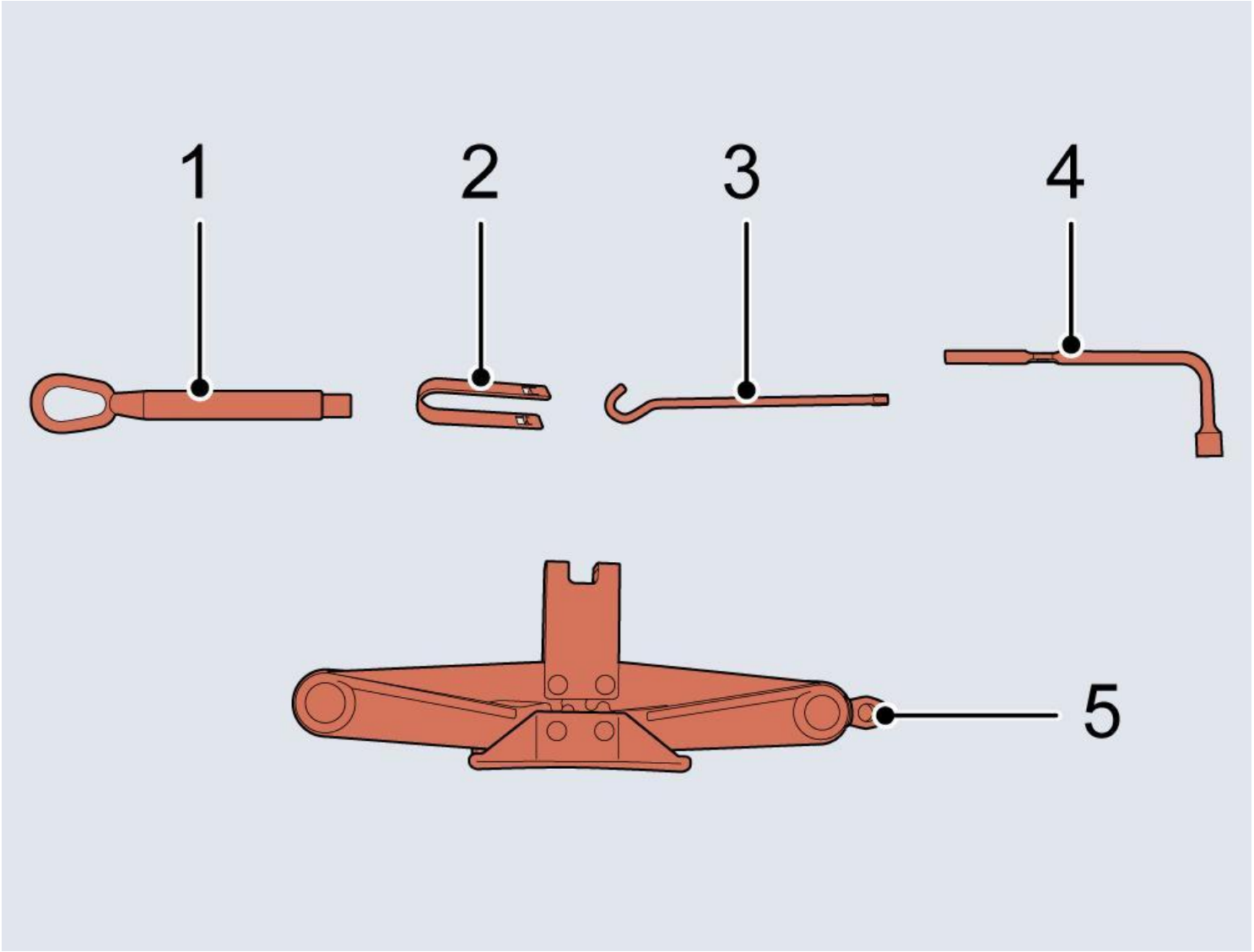

1. Towing Eye

2. Wheel Bolt Cap Removal Tool

3. Wheel Spanner

4. Jack Handle

5. Jack

Wheel Replacement

Wheel Replacement If you need to change the wheel during the journey, choose a safe place to stop away from the main road if possible. Always ask your passengers to get out of the car and wait in a safe area away from other traffic.

Turn on hazard warning lamps. If available, position a warning triangle about 50 ～ 150 metres behind your vehicle to warn approaching traffic.

Before changing a wheel, ensure the front wheels are in the straight ahead position. Apply the parking brake and put the vehicle into P gear. Place the Start switch in the OFF position.

Positioning the Jack

Warning: DO NOT work underneath the car with a wheel changing jack as the only means of support. The jack is designed for wheel changing only!

Warning: NEVER jack the car using any positions other than the jacking points, otherwise serious damage may be caused.

Warning: Avoid any damages to the underbody parts, especially hot exhaust system components.

Position the jack on firm level ground under the jacking point nearest the wheel to be removed. Turning the jack screw handle by hand, adjust the jack until the jack head fits snugly onto the flanging of the body.

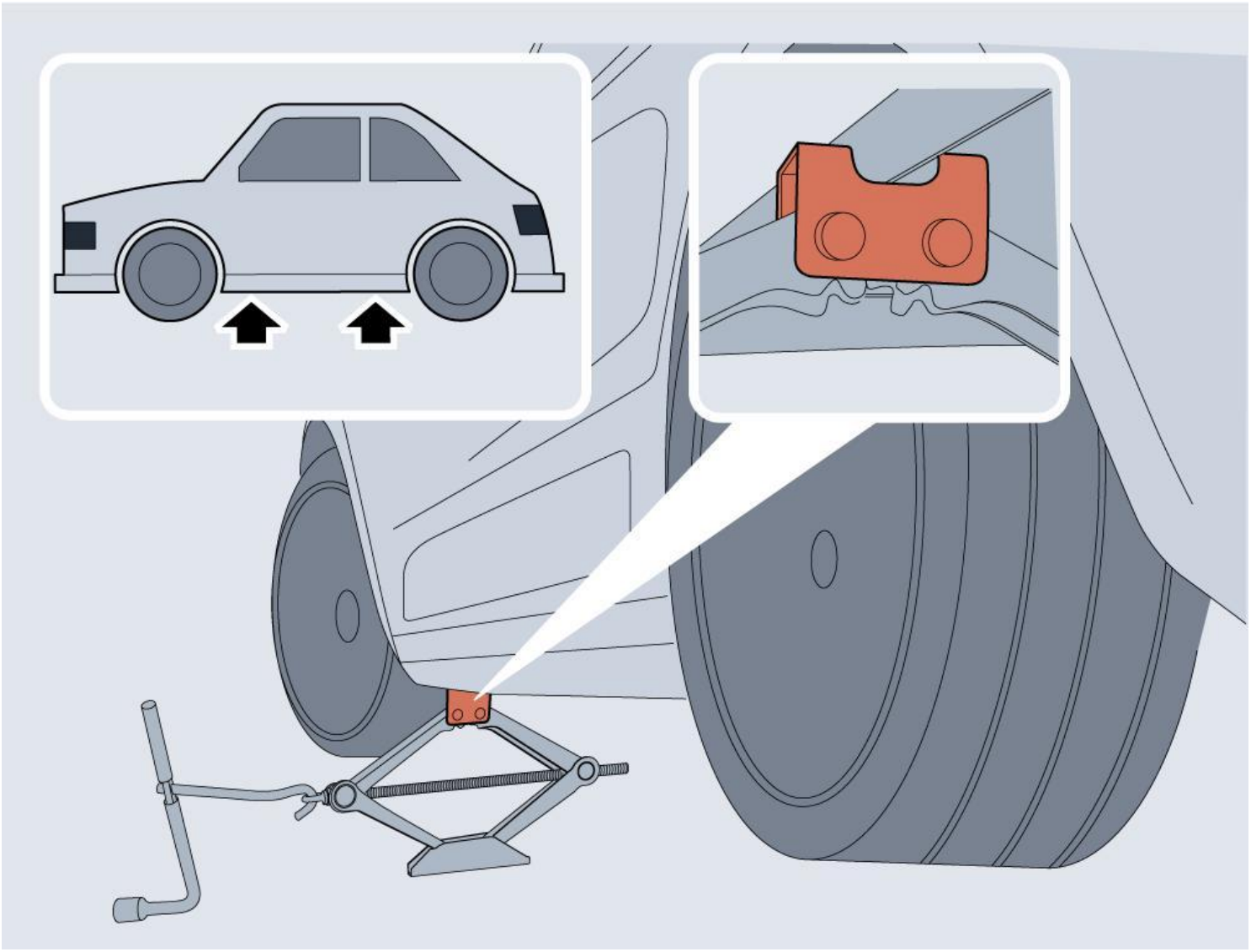

Ensure that the base of the jack is in full contact with the level ground.

Note: Ensure the jack is positioned on firm, level ground.

Note: If the vehicle must be parked on the hill, place chocks in front of and behind other 3 wheels to prevent the vehicle moving.

Fitting the Spare Wheel

Warning: Regularly check the spare wheel tyre pressure, it may be under pressure due to being unused for long periods of time. Always check the tyre pressure after changing a wheel.

Warning: The wheel bolts must be tightened to the specified torque after changing a wheel (135 ~ 165 Nm).

1. Before raising the car, use the vehicle tool to remove each wheel bolt cap. Use the wheel bolt spanner to slacken each bolt half a turn anti-clockwise.

2. Turn the handle in a clockwise direction until the tyre is clear of the ground.

Note: For your safety, place the spare tyre under the body flange near the jack, and avoid placing wheels face down on the ground - the surface may be scratched.

3. Remove the wheel bolts and put away to prevent them from being lost. Make sure the vehicle is steady and there is no risk of slip or movement before removing wheel bolts.

4. Pull out the wheel and place it flatwise.

Note: Place the removed wheel under the body flange near the jack, and avoid placing wheels face down on the ground - the surface may be scratched.

5. Fit the spare wheel and tighten the wheel bolts until the wheel is seated firmly against the hub.

6. Lower the vehicle and remove the jack, then FULLY tighten the wheel bolts in a diagonal sequence.

7. Place the tools back, and put the replaced wheel into the trunk in place.

Note: DO NOT stand on the handle of the wheel bolt spanner or use extension tube on the handle of the spanner.

Note: When replacing the wheel, please fully tighten the bolts in the diagonal sequence twice.

Note: Consult an After-sales Repairer or tyre specialist for a replacement tyre as soon as possible.

Important Instructions for Spare Wheel

Warning: Only one spare wheel can be used at any one time, otherwise the operational performance and brake performance may be reduced, thereby leading to accident or injury to yourself and others.

Warning: Snow chains can not be used on the spare wheel, this can cause damage to the car and snow chain.

When the spare wheel is fitted, drive the car with care, and the speed should not exceed 50 mph (80 km/h). Please have the full-scale tyre repaired and replace the spare wheel as soon as possible. This will extend the life span of the spare wheel for other emergencies.

Note: DO NOT use an automatic car wash when the spacesaver wheel is fitted, the guide rails of the car wash may conflict with the wheel/tyre and cause damage.

Fuse Replacement

Fuse

Fuses are simple circuit breakers which protect the car's electrical equipment by preventing the electrical circuits from being overloaded. A blown fuse indicates that the circuit under its protection been subject to overload or has developed a fault.

If you suspect a fuse is faulty, you can take it out of the fuse box and inspect it to see if the wire in the fuse is blown.

It is recommended to carry spare fuses in the vehicle, which can be obtained from an Authorised Repairer.

IMPORTANT

- NEVER attempt to repair a blown fuse. ALWAYS replace a fuse with one of the same rating, it is possible a fire may be caused due to electrical system damage or circuit overload.

- If the replaced fuse blows immediately, please contact an Authorised Repairer for service as soon as possible.

Fuse Box

The vehicle is equipped with 4 fuse boxes:

1. Passenger compartment fuse box (behind the driver side lower trim panel)

2. Front compartment fuse box (front left of the front compartment)

3. Battery fuse box (above the battery in the loadspace)

4. Loadspace fuse box (left side trim panel of the loadspace)

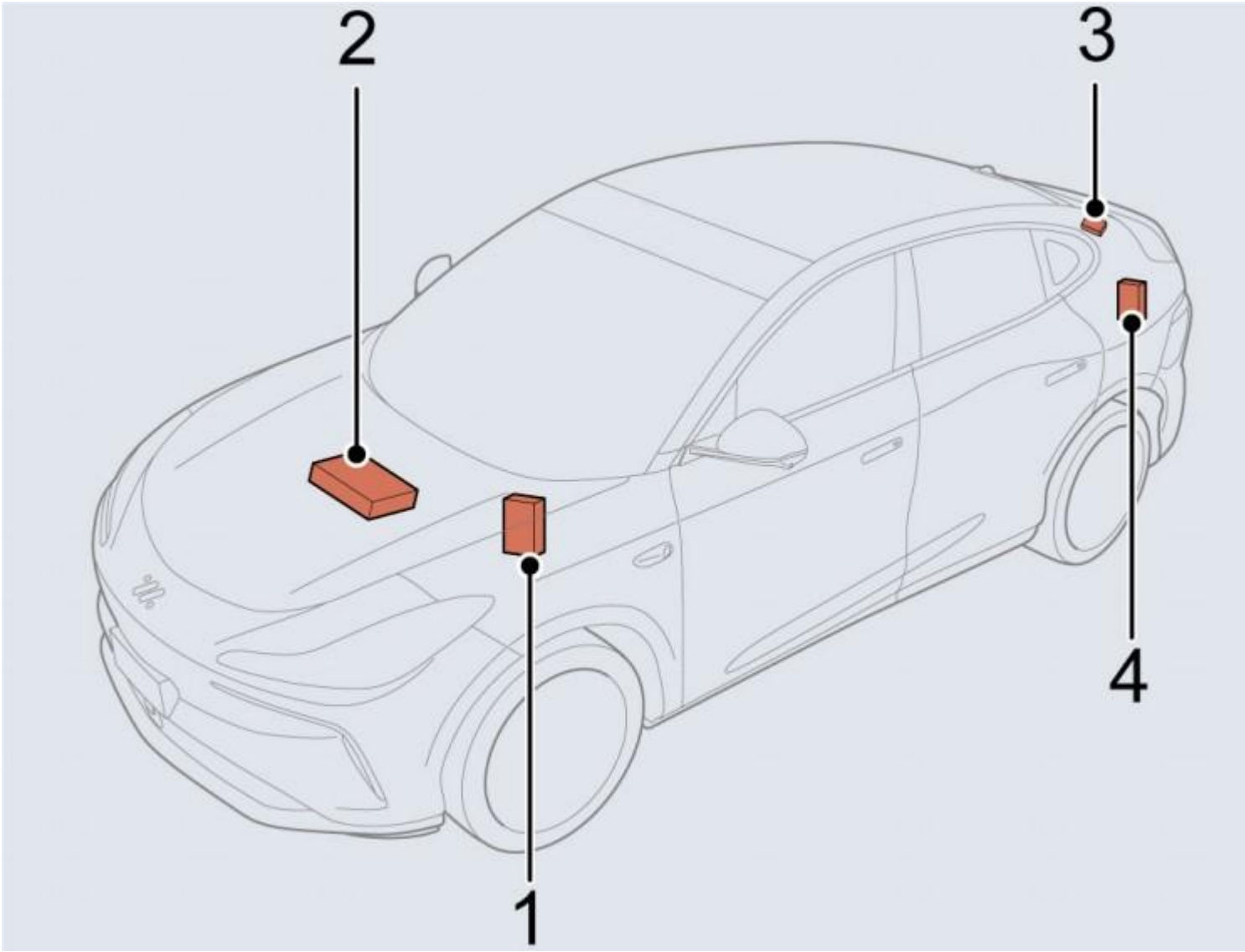

Front Compartment Fuse Box

Fuse Check or Replacement

1. Turn off the Start switch and all electrical appliances, and disconnect the negative battery cable.

2. Remove the front compartment trim cover, and open the upper cover of the fuse box.

3. Hold the fuse head with a fuse extractor, pull and remove the fuse. Check if any fuse is blown.

4. If a fuse is blown, replace it with another fuse of the same ampere value.

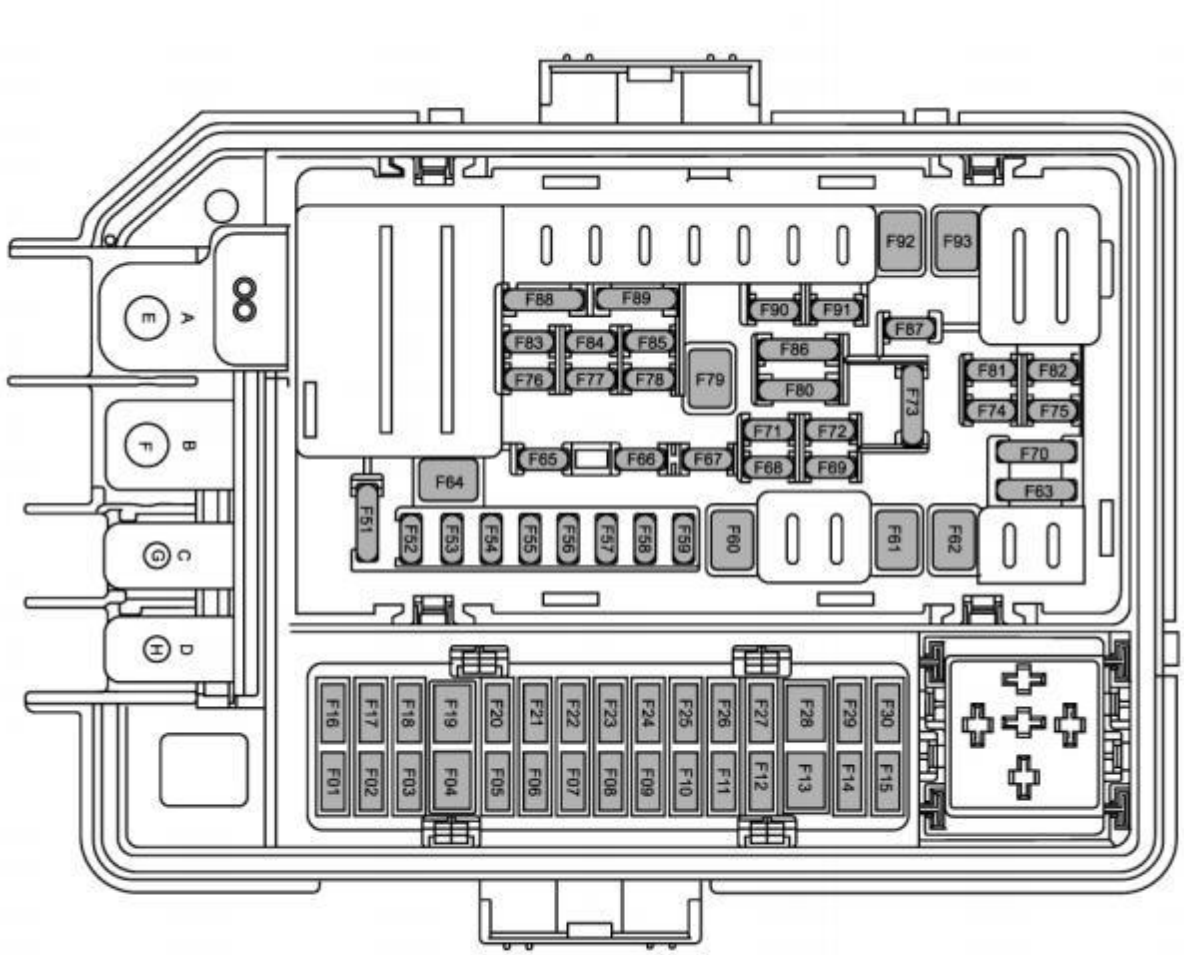

Mark No.	Specification	Function
A	-	-
B	-	-
C	100A	Electric power steering control module
D	-	-

E	-	-
F	-	-
G	60A	Cooling fan
H	60A	Integrated braking system (IBS)
F01	-	-
F02	-	-
F03	-	-
F04	-	-
F05	-	-
F06	5A	Electronic control water valve, multi-way valve of cooling system
F07	-	-
F08	-	-
F09	15A	HVPTC water pump
F10	20A	Power electronic box cooling water pump
F11	-	-
F12	-	-
F13	-	-
F14	15A	High-voltage battery pack cooling water pump
F15	-	-
F16	10A	Front left All Weather Lamp
F17	-	-
F18	-	-
F19	-	-

F20	-	-
F21	-	-
F22	-	-
F23	10A	Front right All Weather Lamp
F24	-	-
F25	-	-
F26	-	-
F27	-	-
F28	-	-
F29	-	-
F30	-	-
F31	-	-
F32	-	-
F33	-	-
F34	-	-
F35	-	-
F36	-	-
F37	-	-
F38	-	-
F39	-	-
F40	-	-
F41	-	-
F42	-	-

F43	-	-
F44	-	-
F45	-	-
F46	-	-
F47	-	-
F48	-	-
F49	-	-
F50	-	-
F51	15A	Horn relay, clock spring
F52	5A	Active intake grille
F53	20A	Front left Light Processing assembly
F54	30A	Body control module
F55	30A	Body control module
F56	5A	Front Detection Radar
F57	-	-
F58	30A	Body control module
F59	-	-
F60	-	-
F61	40A	Integrated braking system (IBS)
F62	30A	Right front door control unit, right rear door control unit
F63	5A	Sensing and diagnostic module, intelligent pilot device (IPD), intelligent cockpit, shifter control unit, body control module
F64	30A	Body control module
F65	-	-

F66	-	-
F67	15A	Front left Light Processing assembly
F68	-	-
F69	30A	Body control module
F70	5A	Integrated braking system, electric power steering control module, high-voltage battery pack system, inertial measurement unit, intelligent motor control unit, secondary axle motor controller
F71	15A	Front right Light Processing assembly
F72	20A	Front right Light Processing assembly
F73	5A	Brake pedal switch
F74	-	-
F75	-	-
F76	-	-
F77	-	-
F78	-	-
F79	-	-
F80	10A	Secondary axle motor controller
F81	-	-
F82	-	-
F83	-	-
F84	-	-
F85	15A	Front windscreen washer relay, body control module
F86	15A	Automatic temperature control
F87	-	-

F88	5A	Electric air conditioning compressor, HV battery pack electric heater
F89	5A	Air quality sensor, driver seat backrest ventilation element, front passenger seat cushion ventilation element
F90	-	-
F91	30A	Body control module
F92	25A	Electronic wiper mechanism
F93	30A	Front left door control unit, rear left door control unit

Passenger Compartment Fuse Box

Fuse Check or Replacement

1. Turn off the Start switch and all electrical appliances, and disconnect the negative battery cable.

2. Remove the driver side trim panel.

3. Hold the fuse head with a fuse extractor, pull and remove the fuse. Check if any fuse is blown.

4. If a fuse is blown, replace it with another fuse of the same ampere value.



Mark No.	Specification	Function
F1	30A	Front blower

F2	7.5A	Seat adjustment switch, NFC entry mode
F3	15A	Intelligent Computing Brain
F4	15A	Clock spring
F5	7.5A	Ambient lighting, PM2.5&Incar integrated sensor
F6	7.5A	Door touch switch module, door opening touch switch, door handle
F7	5A	Shifter control unit
F8	7.5A	Rain/Light/Solar Sensor
F9	-	-
F10	5A	Driver seat lumbar support massage module, front passenger seat lumbar support massage module
F11	30A	Driver seat control module
F12	-	-
F13		-
F14	10A	Sensing and diagnostic module
F15		-
F16	10A	USB hub
F17	15A	Driver screen
F18	10A	Electrical Adjustable Steering Column
F19	30A	Front passenger seat control module
F20	10A	Data link connector (DLC)
F21	15A	Central screen, front passenger screen
F22	-	-
F23	-	-

F24	-	-
F25	-	-
F26	-	-
F27	-	-
F28	-	-
F29	-	-
F30	-	-
F31	7.5A	Overhead console module, air vent control module
F32	7.5A	Bluetooth passive entry and passive start control module, intelligent antenna module, clock spring
F33	7.5A	NFC Start Module
F34	-	-
F35	5A	Alcohol Interlock Control Module
F36	-	-
F37	-	-
F38	-	-
F39	-	-
F40	-	-
F41	-	-
F42	-	-
F43	-	-
F44	15A	Front console power socket, rear power socket
F45	-	-
F46	10A	Centre console rear USB charging module

Loadspace Fuse Box

Fuse Check or Replacement

1. Turn off the Start switch and all electrical appliances, and disconnect the negative battery cable.

2. Remove the driver side trim panel.

3. Hold the fuse head with a fuse extractor, pull and remove the fuse. Check if any fuse is blown.

4. If a fuse is blown, replace it with another fuse of the same ampere value.

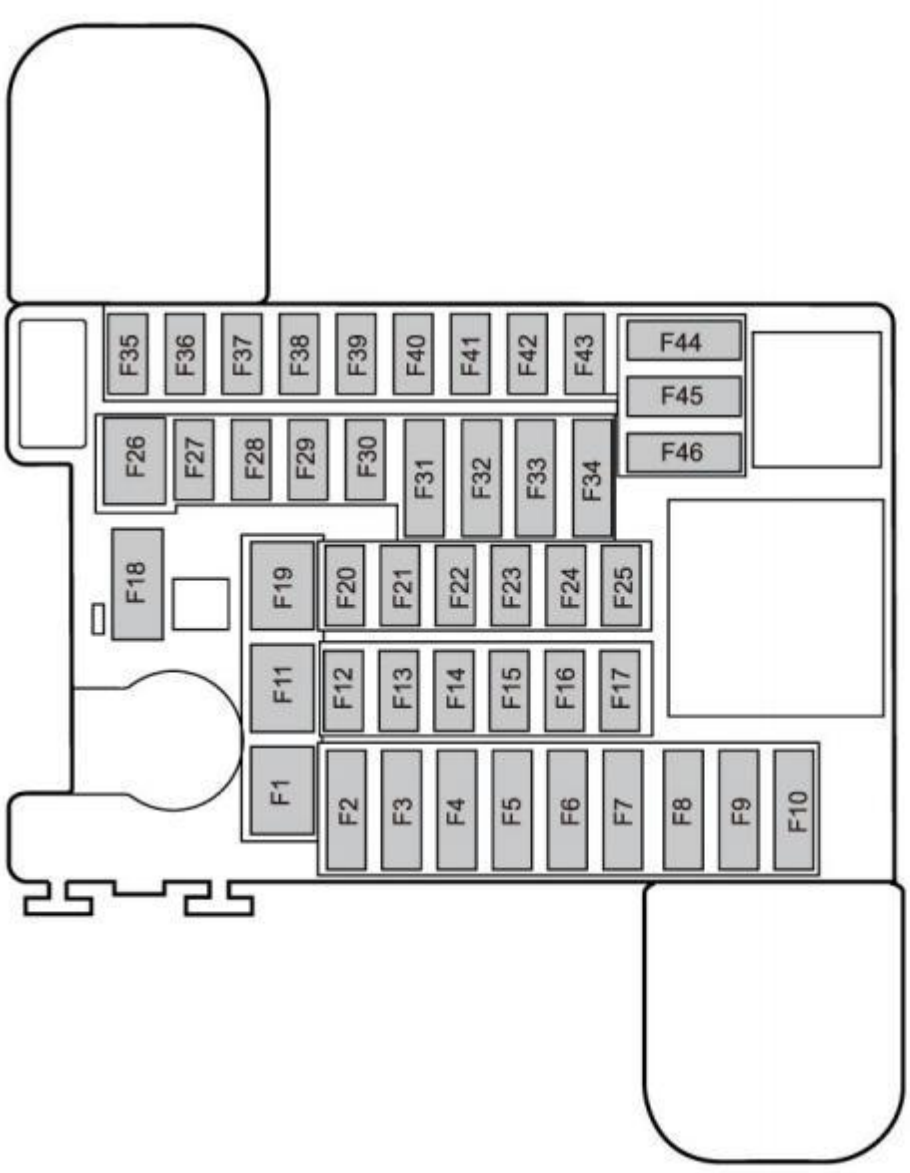

Mark No.	Specification	Function
F01	30A	Rear windscreen heating element
F02	5A	Rearward corner radar, charging port door, Charging State Lamp

F03	15A	Tail lamp assembly
F04	5A	Power tailgate control unit,Trunk Functional Switch Accessory, Electric Vehicle Communication Controller, Kick Sensor
F05	-	-
F06	5A	Combined charging unit (CCU), electric parking motor control unit
F07	5A	Park And Maneuver Assistance
F08	-	-
F09	-	-
F10	10A	Intelligent motor control unit,Vehicle Motion Controller
F11	60A	Rear Wheel Steering
F12	25A	Power amplifier
F13	20A	Electric parking motor control unit
F14	-	-
F15	25A	Intelligent pilot device
F16	20A	ESS
F17	25A	Suspension Control Module
F18	25A	Electronic oil pump controller
F19	60A	Suspension Control Module
F20	25A	Power tailgate control unit
F21	20A	Tail lamp assembly
F22	10A	High-voltage power distribution unit
F23	25A	Power amplifier
F24	-	-
F25	25A	Power tailgate control unit

F26	-	-
F27	20A	Trailer Device Module
F28	20A	Trailer Device Module
F29	15A	Trailer Device Module
F30	-	-
F31	-	-
F32	-	-
F33	-	-
F34	-	-
F35	10A	Rearview mirrors
F36	-	-
F37	-	-
F38	-	-
F39	-	-
F40	-	-
F41	-	-
F42	-	-
F43	-	-
F44	-	-
F45	-	-
F46	-	-

Battery Fuse Box

Fuse Check or Replacement

1. Turn off the Start switch and all electrical appliances, and disconnect the negative battery cable.

2. Raise or remove the loadspace floor and battery cover.

3. To remove these fusible links use a suitable spanner or socket. Check if any fuse is blown.

4. If a fuse is blown, replace it with another fuse of the same ampere value.

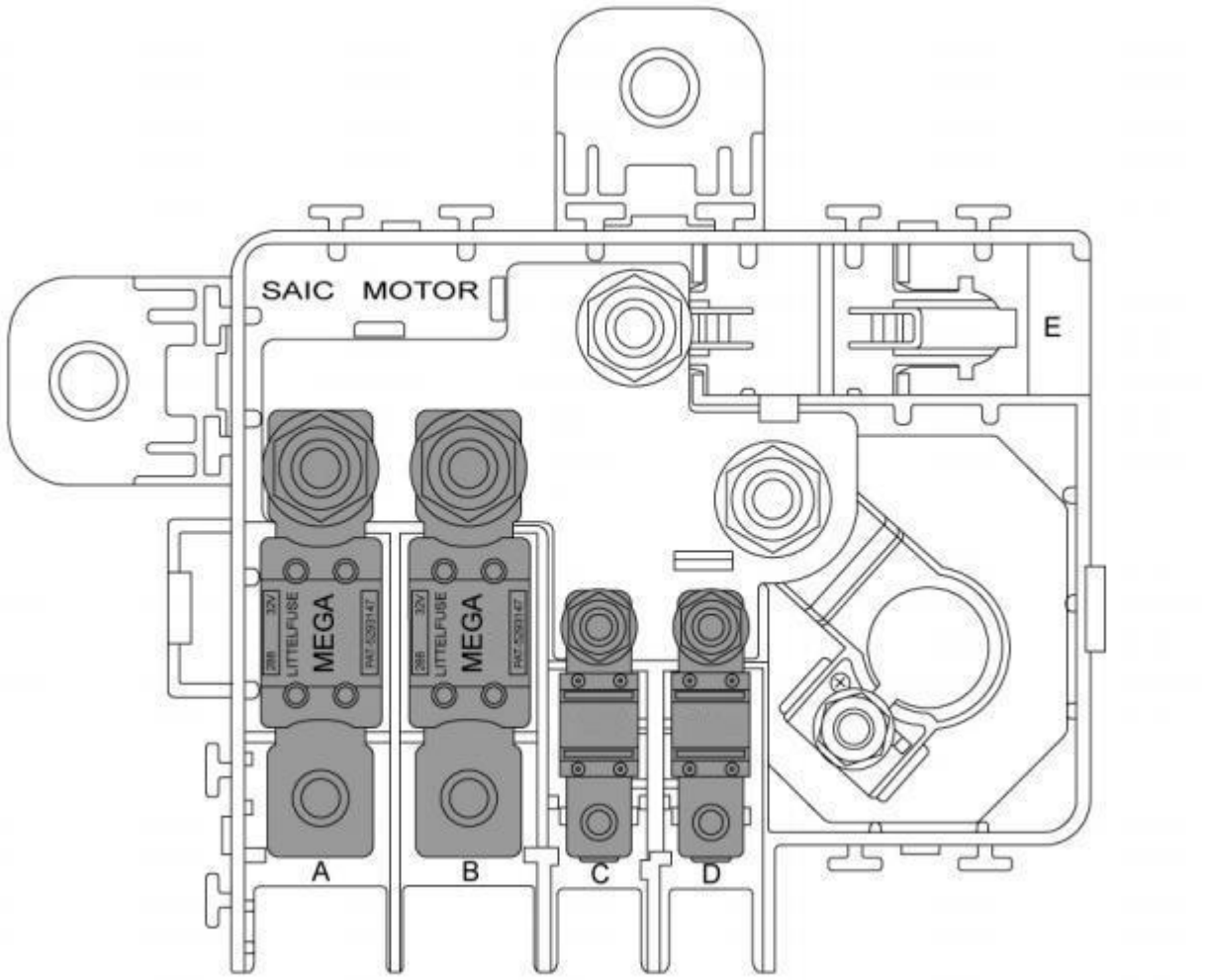

Mark No.	Specification	Function
F1	350A	High voltage DC-DC converter
F2	150A	Front compartment fuse box
F3	100A	Passenger compartment fuse box
F4	100A	Loadspace fuse box

Emergency Rescue

Identifications and Signs

Appearance Identification Information



This model can be identified as an electric vehicle as it does not feature exhaust pipes.

Safety Signs

Note: Please always follow the safety requirements stated on any warning labels fitted on the high-voltage system. Not all high-voltage components are labeled. Suitable insulated personal protective equipment (PPE) must always be worn during rescue.

High voltage is dangerous. Please do not touch orange components or components with high-voltage warning labels attached without authorisation. Please note the following examples and safety signs.

High-voltage Sign	High-voltage Harness	High-voltage Connector	High-voltage Label	Manual Service Disconnect
		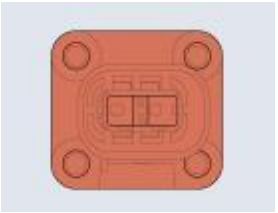		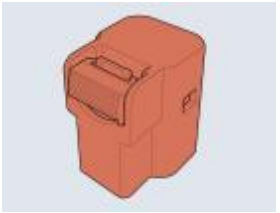
High-voltage warning sign, indicating that the corresponding component has high-voltage power	High voltage harnesses are orange in colour. These are used to distribute high voltage power.	High-voltage connectors are orange, these are used to connect the high-voltage component and high-voltage harness of the vehicle.	High-voltage warning labels will be located on the high-voltage component. Please follow the safety requirements on the label	The MSD is orange in colour and must be disconnected before working on the high-voltage system.

Note: Depending on the market area and date of manufacture of the vehicle, warning labels may be changed or translated into other languages.

High-voltage System Key Components and Layout

High-voltage System Components

High-voltage System Components - 2WD

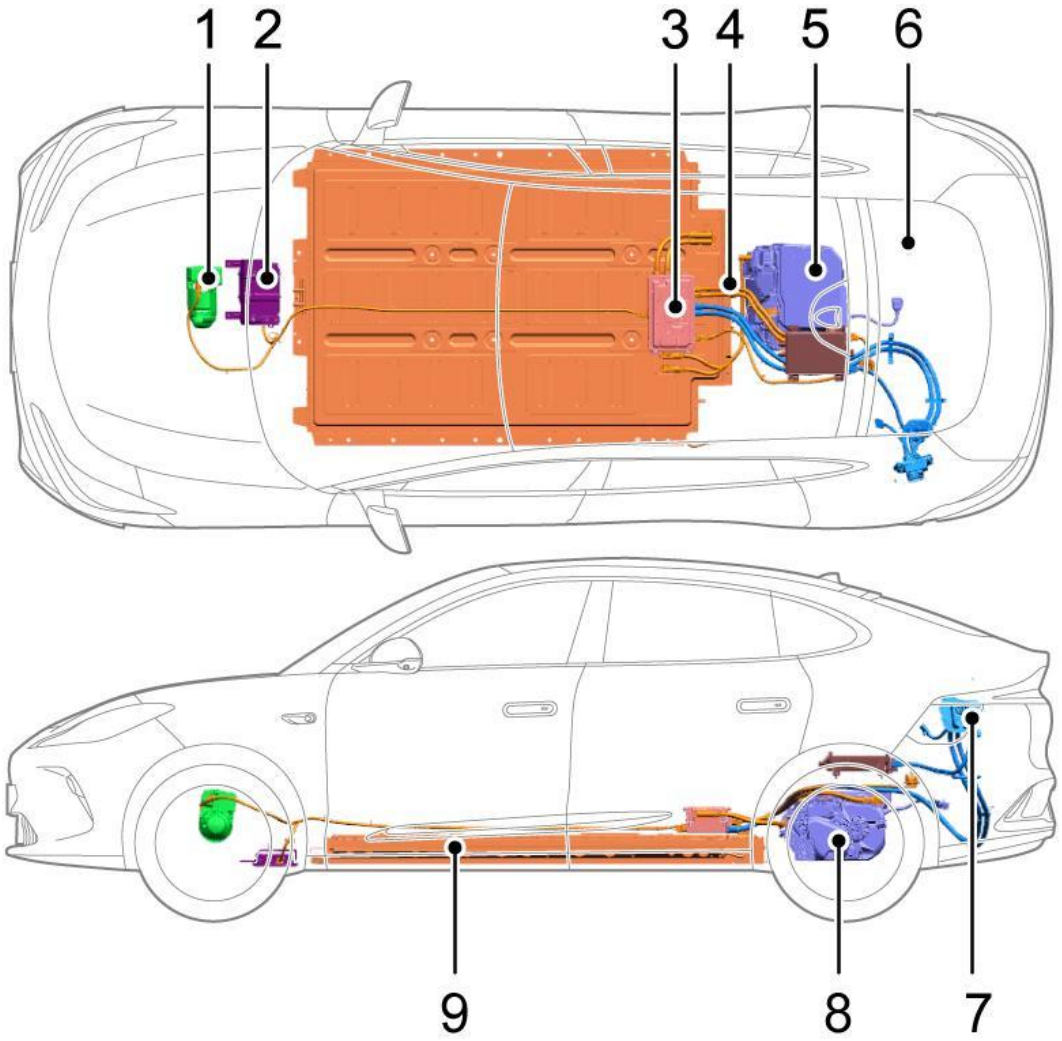

1. Electric A/C compressor
2. Battery heater
3. High-voltage power distribution unit
4. High-voltage harness
5. Combined charging unit
6. Manual service disconnector (MSD)
7. Charging port
8. Rear electric drive unit
9. High-voltage battery pack

High-voltage System Components - 4WD

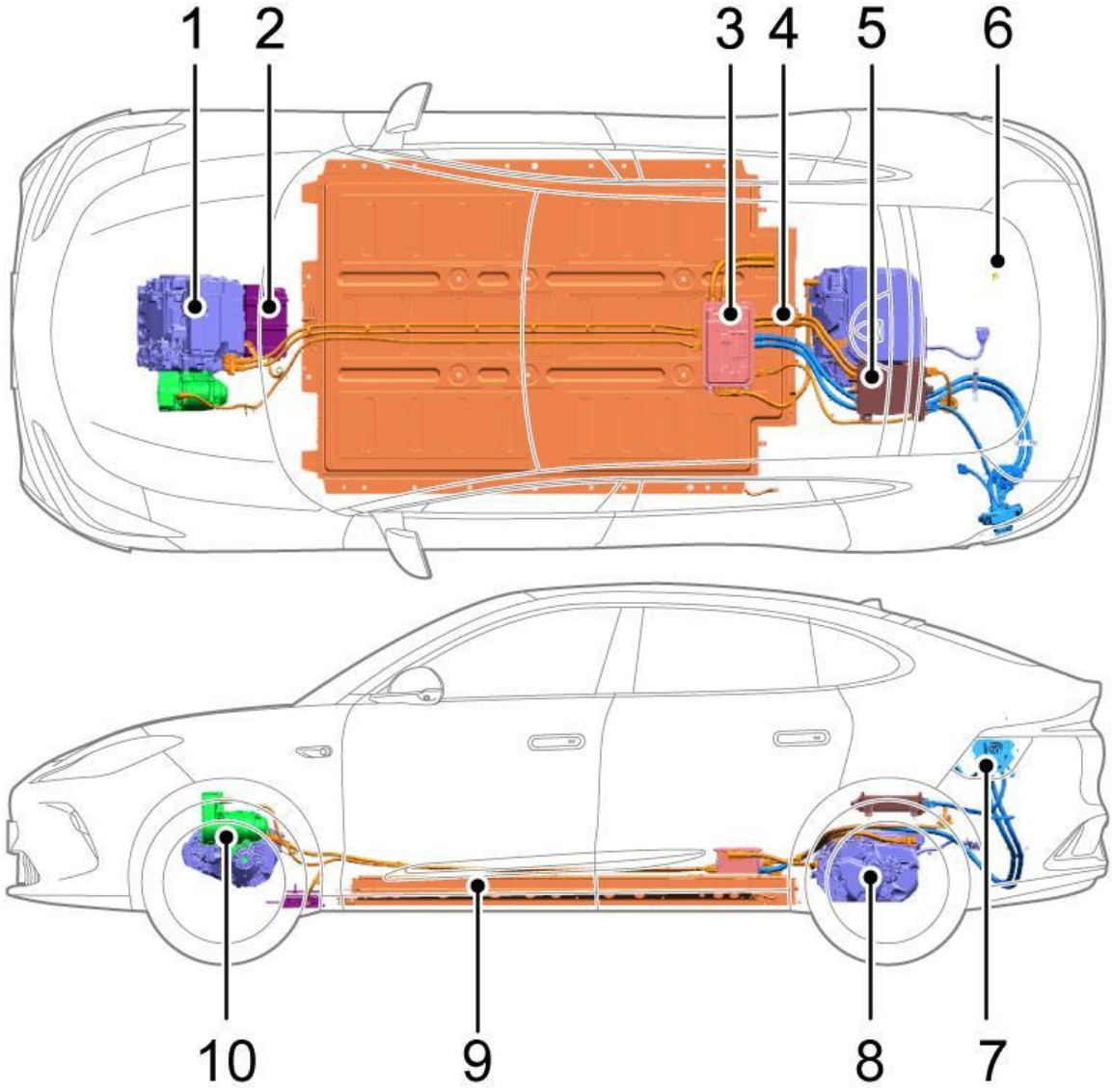

1. Front electric drive unit
2. Battery heater
3. High-voltage power distribution unit
4. High-voltage harness
5. Combined charging unit
6. Manual service disconnector (MSD)
7. Charging port
8. Rear electric drive unit
9. High-voltage battery pack
10. Electric A/C compressor

Emergency Rescue

Safety Instructions for Emergency Rescue

- Please always observe the high-voltage safety precautions during rescue. The safety of rescue personnel and any by standers is priority.
- Vehicle components with high-voltage warning labels and orange harnesses are high-voltage components.
- Please always follow the safety requirements on the warning labels fitted to the high-voltage system.
- Work on high-voltage components must be performed by qualified personnel, and the operators must always wear suitably insulated personal protective equipment and use insulated tools.
- When working on high-voltage components, the high voltage must be disconnected by strictly following the operation instructions of "High Voltage Disconnection" in this Handbook to ensure safety before proceeding.
- Never damage the high-voltage battery pack when lifting the vehicle from below. Please take extra care to ensure that the floor is not damaged when using rescue tools.
- Regardless of the operations, care should always be taken with all high-voltage components, and cutting, squeezing or touching high-voltage components, failure to observe these instructions may cause severe injury or death.

Protective equipment

Work on high-voltage components must be performed by qualified personnel, and the operators must be provided with the correct insulated personal protective equipment and use insulated tools.

Insulating Protective Equipment and Insulating Tools	Illustration
Insulating gloves, withstand voltage 1kV	

Insulating shoes, withstand voltage 18kV	
Insulating tools, withstand voltage 1kV	
Insulating pad, withstand voltage 10kV	

High Voltage Disconnection

When the power system can be turned off normally, rescue services can disconnect the high-voltage output by first turning off the power system, then disconnecting the negative cable of 12V low-voltage battery, and finally the manual service disconnect (MSD) switch.

In an emergency, the high-voltage output can be disconnected by disconnecting or cutting the negative cable of 12V low-voltage battery and then the manual service disconnect (MSD) switch.

Disconnection of 12V low-voltage battery

1. Open the loadspace and remove the loadspace carpet and storage box.

2. Disconnect or cut the negative cable of 12V low-voltage battery.

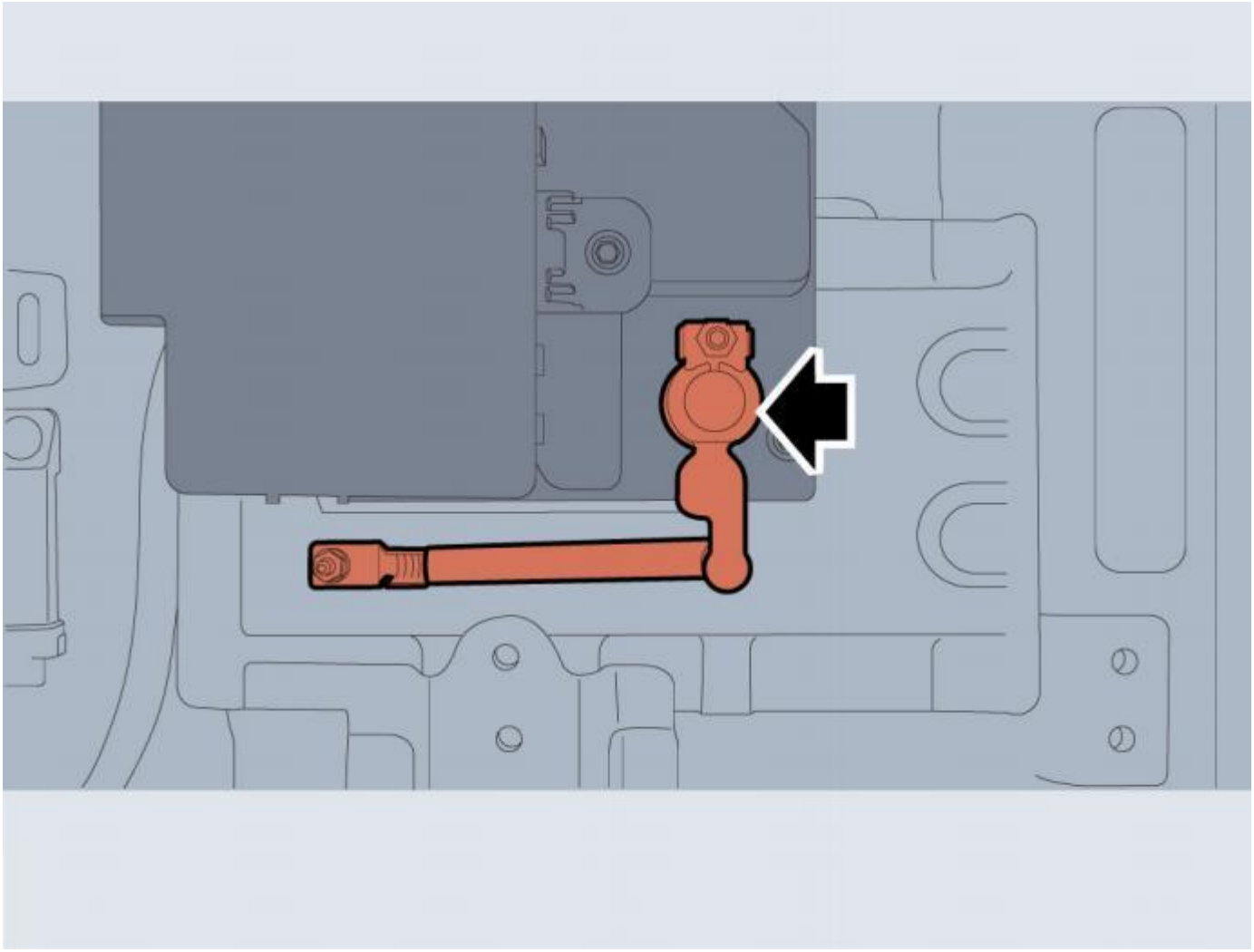

Note: After turning off the power system, the high-voltage circuit can remain active for at least 1 minute.

Disconnection of Manual Service Disconnect

When disconnecting the high voltage, the operators should wear insulated personal protective equipment and use special insulated tools:

1. Open the loadspace and remove the loadspace carpet and storage box.

2. Remove the manual service disconnect.

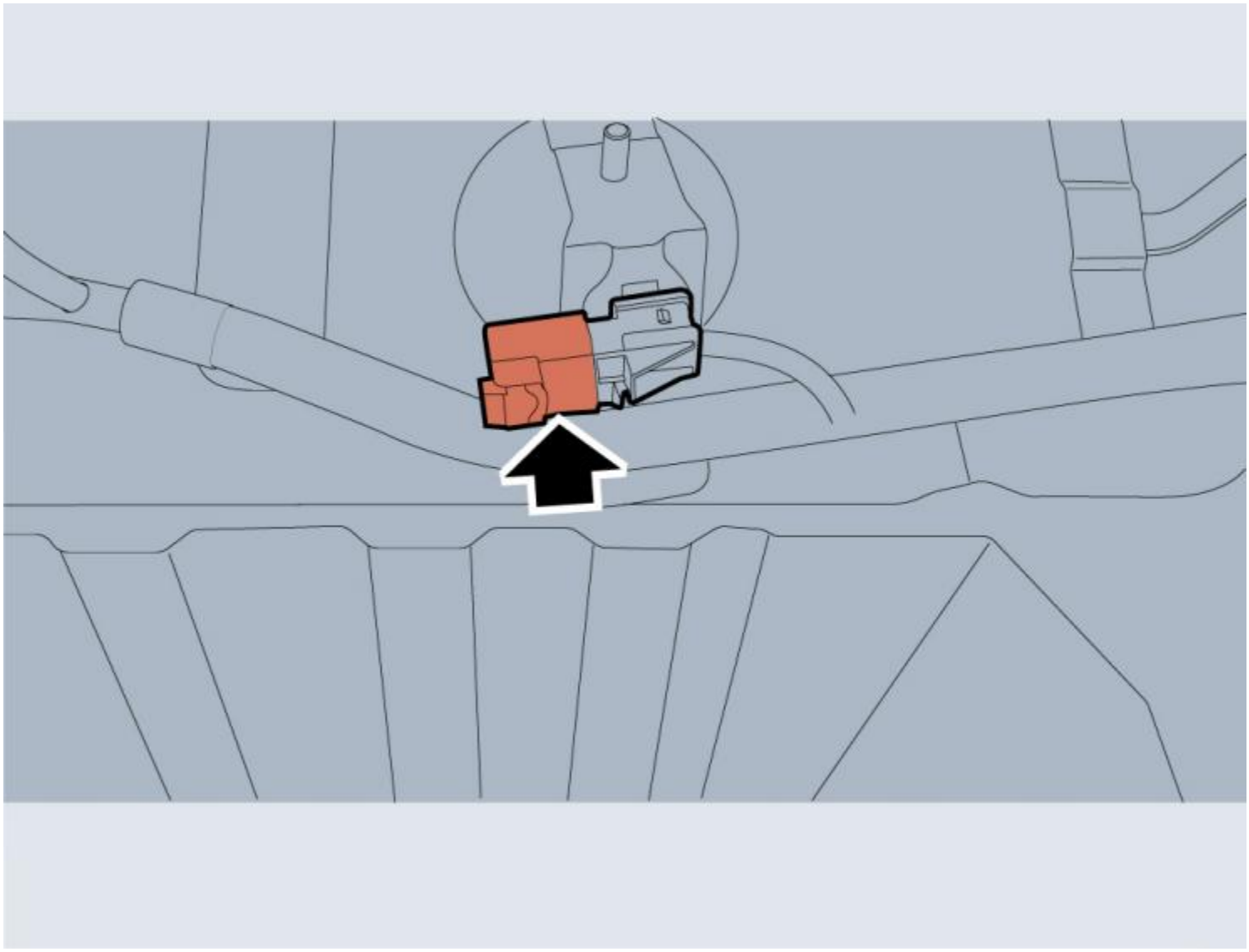

Note: When the manual service disconnect is removed, measures must be taken to prevent foreign objects from entering the manual service disconnect base.

IMPORTANT

Prior to working on, or dismantling the high voltage system or any of its components special equipment (voltmeter, etc.) should be used to confirm whether the voltage of high-voltage circuit is within the safety range (the voltage must not be greater than 30V AC and 60V DC) before the corresponding operation.

Fire

Note: During rescue in situations where fire is involved, please always wear complete personal protective equipment, including self -contained breathing (SCBA).
During rescue of a vehicle on fire, the rescuers should wear suitable insulated personal protective equipment and use special insulated tools:

- The driver, passengers and irrelevant personnel must move away from the vehicle immediately.
- Damaged metal live conductors of high-voltage components must not be touched during rescue to prevent possible injuries due to electric shock.
- When thoroughly checking after the fire, do not touch any high-voltage components and always use insulated tools for disposal. Disconnect the high-voltage output immediately if the conditions permit.
- If a small fire occurs and the flame does not spread to the high-voltage battery pack, carbon dioxide or ABC dry powder fire extinguishers may be used to extinguish the fire.
- If the high-voltage battery pack catches fire, a large amount of water may be used to continuously spray it to reduce its temperature. (If no one is trapped and the conditions do not permit rescue, the rescuers may allow it to burn out. Meanwhile, the fire must be contained and not allowed to spread and the inhalation of toxic substances in the smoke must be avoided.)
- Burning or heated high-voltage batteries release toxic gases. The rescuers must always use complete personal protective equipment (including SCBA) to protect themselves and take appropriate measures to direct smoke and gases to protect surrounding people from the accident.
- The battery contains many chemicals, with a risk of re-igniting. Thermal imagers, thermometers and other devices should be used in the handling process to monitor the battery temperature in real time. If a sharp rise of internal battery temperature or smoke release is found, the operation must be stopped immediately, and spray guns should be used to extinguish the fire and cool down the battery until the thermal incident within high-voltage battery pack is under control.
- After the fire is completely extinguished, the damaged vehicle should be transferred to a safe place for isolation immediately. When transferring the vehicle, it must not be directly towed and should be transported by a rescue vehicle.
- If the high-voltage battery pack and high-voltage components are damaged, a small amount of liquid may leak, such as lithium battery electrolyte and coolant. Do not touch or come into contact with this substance, use the appropriate cleaning method to clean the area immediately and prevent it from entering the sewer system or other waters.
- After rescue, the damaged vehicle and high-voltage battery pack must be handled correctly and by qualified personnel, contact an Authorised Repairer for advice on process and disposal.

Fire Extinguisher

Fire extinguishers should be purchased personally and replaced periodically. A carbon dioxide extinguisher or ABC dry powder extinguisher is recommended.

If the vehicle catches fire and the fire is small, an extinguisher can be used to extinguish it (refer to the instructions for use of fire extinguisher).

Note: When using a fire extinguisher, direct skin contact should be avoided to prevent frostbite.

Wading

Like other vehicles, wading will not cause a greater risk to your vehicle. Appropriate insulated protective equipment must be worn when handling any water-logged vehicle.

- The driver, passengers and irrelevant personnel must move away from the vehicle immediately.
- Any damaged metal live conductors of high-voltage components must not be touched during rescue to prevent possible injuries due to electric shock.
- If there is no hissing or foaming from the high-voltage battery pack of the water-logged vehicle, it can be salvaged by a professional agency.
- After salvaging, the high voltage system on the vehicle must be isolated immediately, and the vehicle placed in an open area for isolation.
- When recovering the vehicle, it must not be directly towed and must be transported by a rescue vehicle.
- After rescue, the damaged vehicle and high-voltage battery pack must be handled correctly and by qualified personnel, contact an Authorised Repairer for advice on process and disposal.

Cutting

Warning: Regardless of the high voltage isolation procedure used, care should always be taken with all high-voltage components to avoid possible power-on risks. Cutting, squeezing or touching high-voltage components may cause severe injury or death.

When cutting a vehicle, please use the correct and appropriate tools (such as hydraulic cutter) and always wear suitable personal protective equipment, otherwise severe injury or death may be caused.

- Components such as the high-voltage system and its components, gas spring and supplementary restraint system (SRS) are defined as non-cuttable areas (circled in red in the figure). Do not cut or squeeze these areas, failure to observe this may result in severe injury or even death. High-voltage components can be cut only after the high voltage is disconnected, except for high-voltage battery pack.

- To protect the driver and passengers, some areas of the vehicle body are made of ultra-high strength steel, therefore these areas (indicated by the cyan colour areas in the figure) should be demolished or expanded using the appropriate tools during rescue.

RWD Model

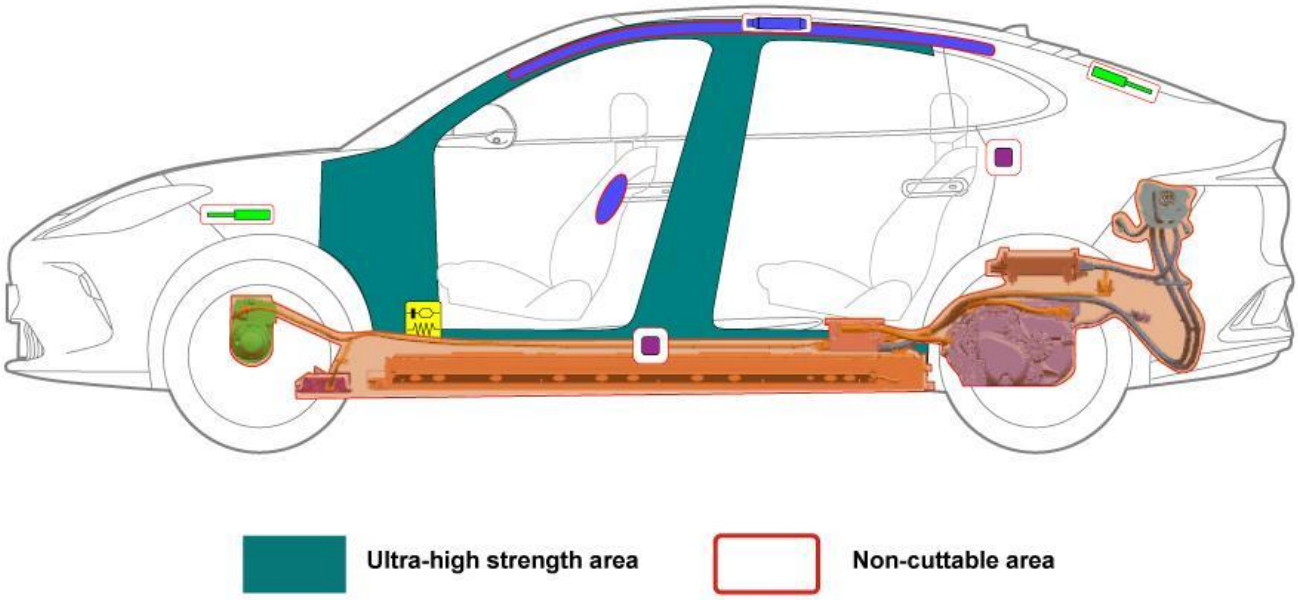

AWD Model

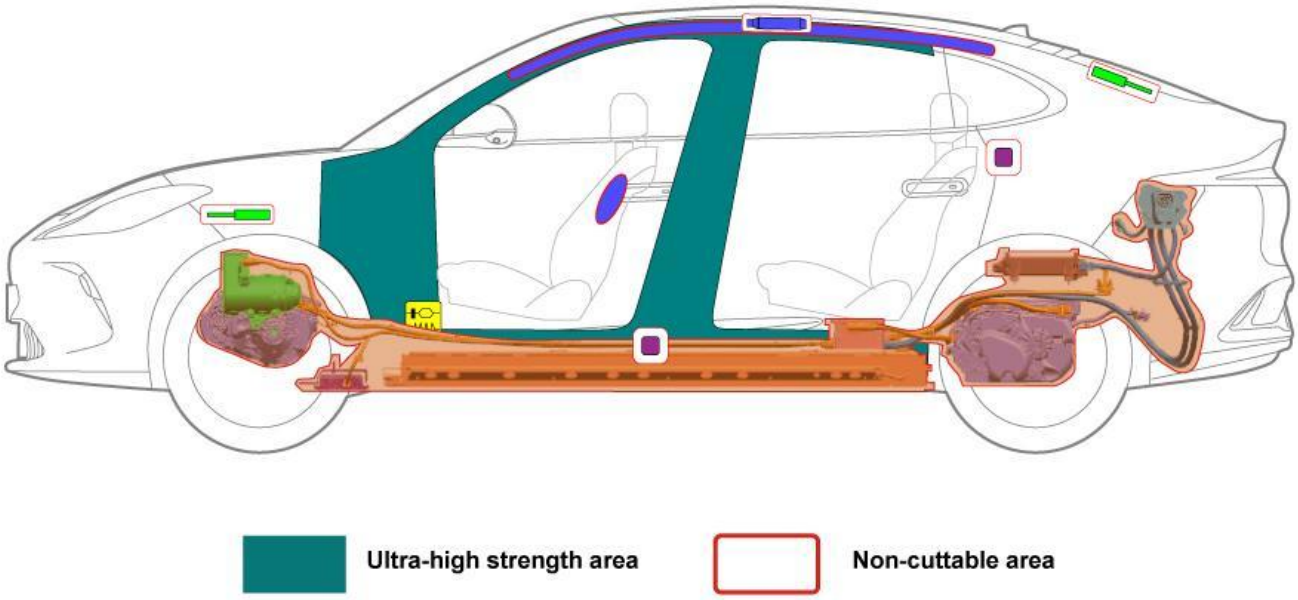

Lifting

Warning: Always avoid damaging the high-voltage battery pack when lifting the vehicle from below. Please take extra care to ensure that the floor is not damaged when using any lifting, towing or rescue tools.

The high-voltage battery pack is located on the underside of the vehicle. When lifting or stabilizing the vehicle, only use the designated lifting area (as shown in green in the figure), and ensure that the high-voltage battery pack (shown as the orange area in the figure) or other high-voltage components are not contacted.

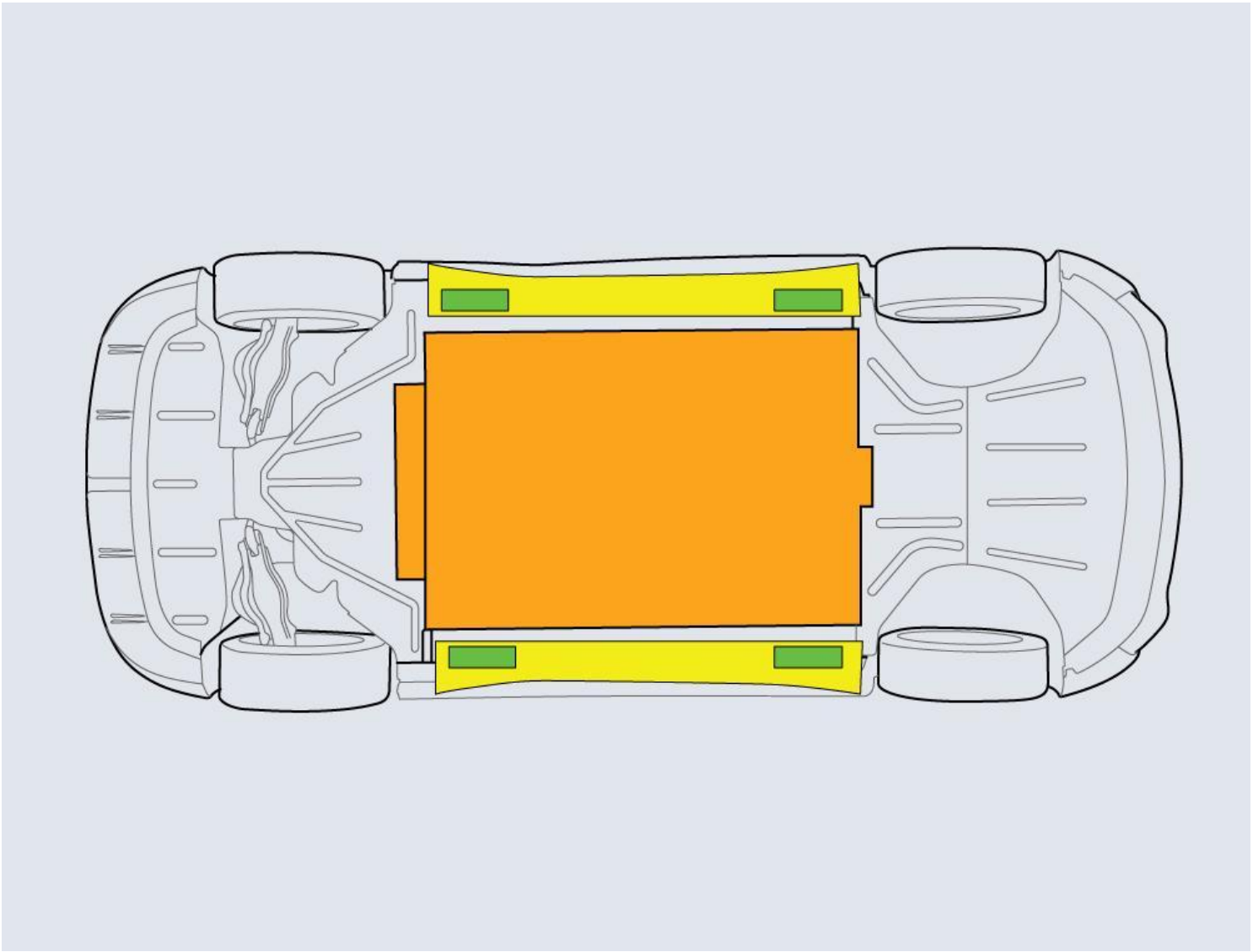

Vehicles Evacuated from the Scene after the Accident

If a vehicle requires removal or recovery please observe the following instructions: When transporting the vehicle, place wheel chocks (1) as shown in the figure, and then position the anti-slip rubber blocks (2) around the wheel. Meanwhile, fit the lashing straps (3) around the wheels and secure them to the trailer. Fasten the straps to secure the vehicle.

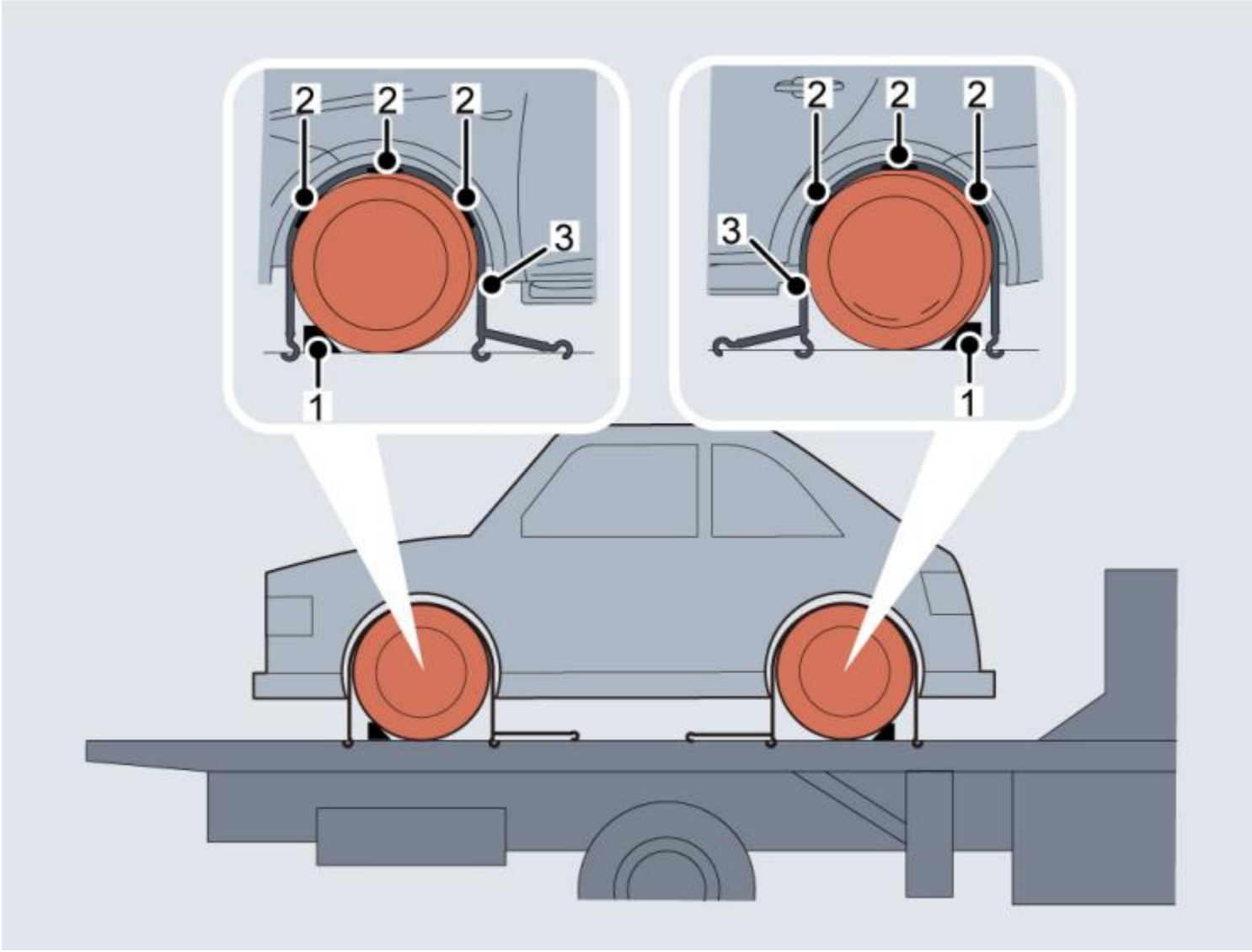

In some cases where the vehicle has broken down or suffered a minor accident, you can use the towing hook to tow your vehicle, such as towing your vehicle onto the transporter. The towing hook is not designed for towing other vehicles. It is recommended to tow the vehicle using a solid rod, and if it is not available, a soft rope may be used.

Suspended towing is the best method for recovering a vehicle that needs to be towed. The drive wheels should be suspended above the ground, or the transmission may be damaged. Switch on the hazard warning lamps and ensure no passengers are in the towed vehicle.

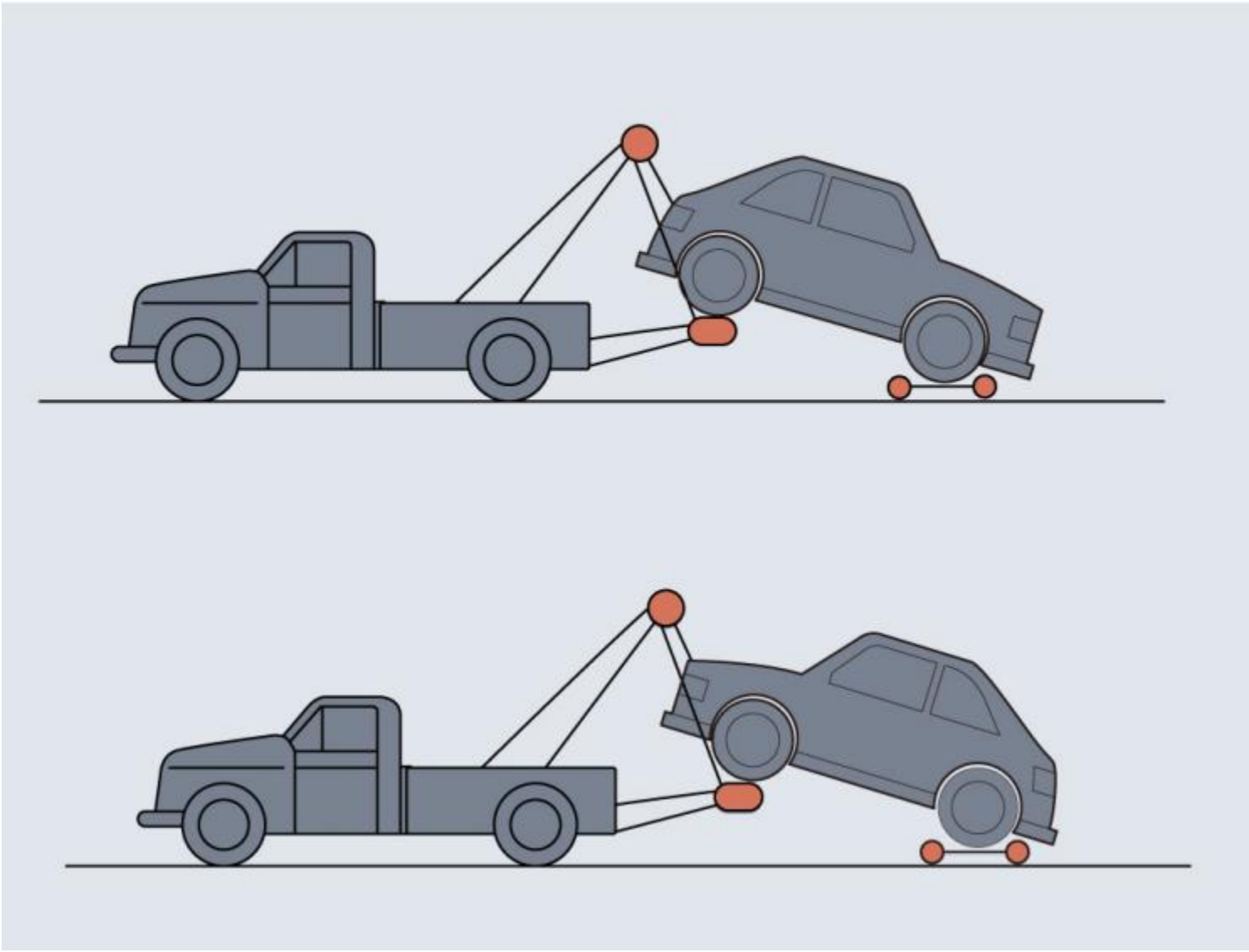

IMPORTANT

- Only when there is no safety risk to the vehicle can it be towed away from the site. If the vehicle battery pack is deformed, leaking or smoking, the safety risk should be eliminated first.
- Before transporting the vehicle, ensure that the parking system is enabled.
- Before towing the vehicle, switch on the hazard warning lamps, close and lock the doors.
- When towing the vehicle, DO NOT suddenly accelerate or brake suddenly, this can cause accidents.
- When towing or transporting the vehicle, no passengers should be left in the vehicle.
- When towing the vehicle, ensure the air suspension is in service mode.

Parking Operation

The vehicle can be placed in Park and the power system switched off when a safe and normal pullover is allowed by following the instructions below:

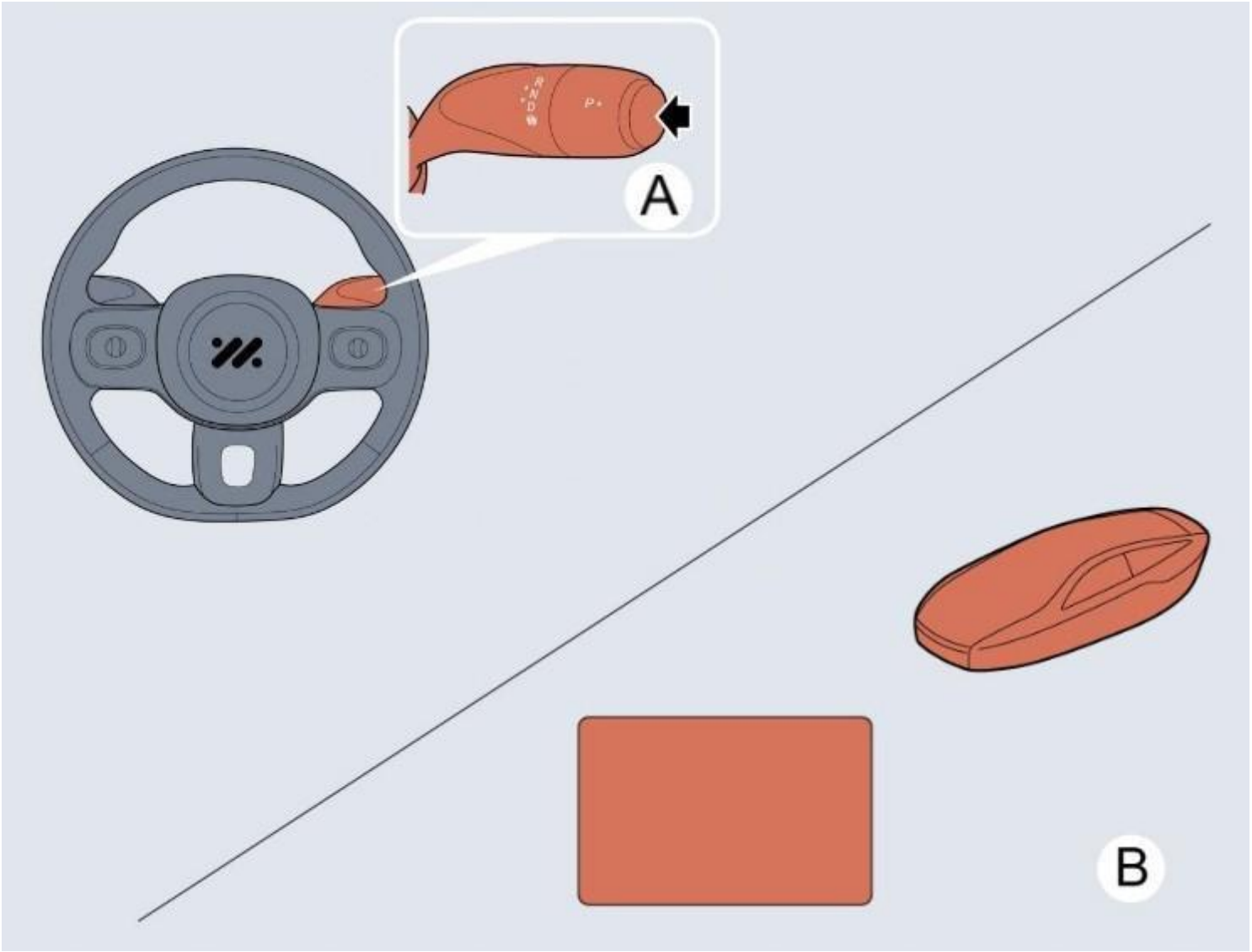

1. After bringing the car to a stop, ALWAYS maintain pressure on the brake pedal;

2. By pressing the button on the end of the shift lever (A);

3. Use the NFC card or smart key (B) to lock the vehicle.

Maintenance

Inspection and Maintenance

Regular Maintenance

The safety, reliability and performance of your vehicle will depend partly on how well it is maintained. You must maintain your vehicle according to the requirements in the Owner's Manual.

Note: If the vehicle is not maintained or the displayed values are not reset after maintenance, the maintenance display cannot provide correct information.

Maintenance History

After each maintenance, always ask the Authorised Repairer to register the maintenance.

Brake Fluid Replacement

Replace the brake fluid according to the requirements in the Owner's Manual.

Note: Additional cost may be incurred for replacement of the brake fluid.

Coolant Replacement

The coolant (anti-freeze and water solution) should be replaced according to the requirements in the Owner's Manual.

Note: Additional cost may be incurred for coolant replacement.

Special Maintenance

If your vehicle is frequently used in dusty conditions, or operated in extreme climates where sub-zero or very high ambient temperatures are normal, more frequent attention may need to be paid to maintenance requirements. You should carry out special maintenance (refer to Owner's Manual) or contact an Authorised Repairer.

Warning: Any significant or sudden drop in fluid levels, or uneven tyre wear, should be reported without delay to an Authorised Repairer and checked immediately.

Routine Check

In addition to the maintenance referred to previously, some simple checks must be carried out more frequently.

Daily Checks

- Operation of lights, horn, wipers, washers and warning lights.
- Operation of seat belts and brakes.
- Look for fluid deposits underneath the car that might indicate a leak.
- Check tyre appearance.

Periodical Checks

- Coolant level.
- Brake fluid level.
- Windscreen washer fluid level.
- Operate air conditioning.

Maintenance Safety

Warning: Cooling fans may commence operating after power down, and continue operating for a couple of minutes. Keep clear of all fans while working in the front compartment.

Observe the following safety precautions at all times during maintenance and service:

- If the vehicle has been driven recently, DO NOT TOUCH cooling system components until the drive motor has been fully cooled down.
- DO NOT TOUCH electrical leads or components when the vehicle is in READY mode.
- DO NOT work underneath the vehicle with a jack as the means of support.
- Wear protective clothing and work gloves.
- Remove watches and jewelry before working in the front compartment.
- DO NOT allow tools or metal parts of the vehicle to make contact with the battery leads or terminals.

Toxic Liquid

Fluids used in the vehicle are poisonous and must not be swallowed or allowed to contact open wounds. These include: battery acid, coolant, brake fluid and windscreen washer fluid. For your own safety, ALWAYS read and obey all instructions on labels and containers.

Bonnet

Opening the Bonnet

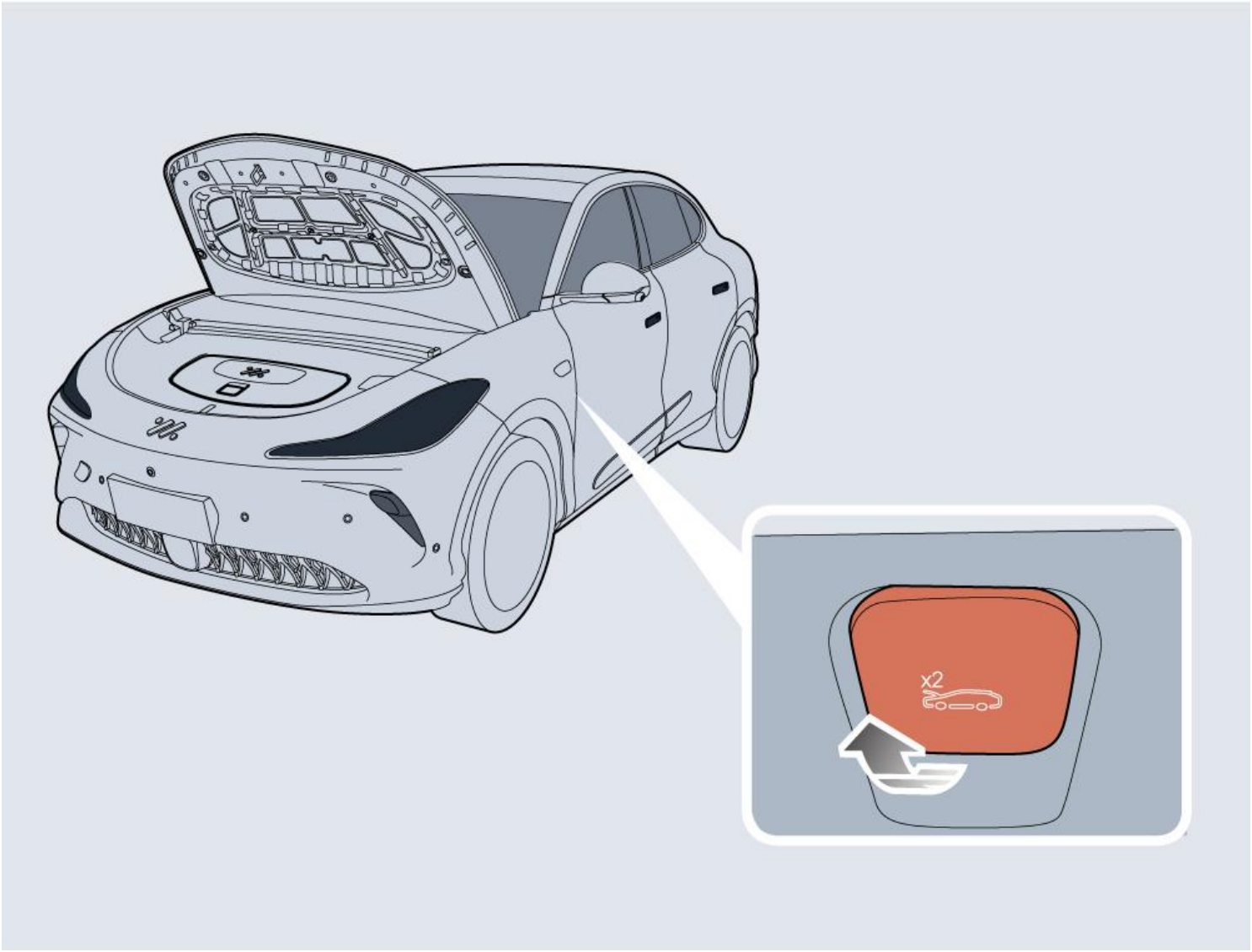

1. Pull the bonnet opening handle inside the vehicle twice consecutively to unlock the bonnet.

2. After unlocking the bonnet, raise the panel, it is supported by special rams.

Closing the Bonnet

Warning: For safety reasons, the bonnet must be fully closed when driving. Always check after closing the bonnet that the bonnet is securely latched, e.g. the bonnet edge is flush with the body of the vehicle.

Warning: You should stop the car immediately when safety permits and close the bonnet if it is not closed fully when driving.

Warning: Beware of injury to hands when closing the bonnet with a downward force.

Warning: In extreme temperature environments, frost or ice may form on the surface of the gas spring piston rod of the bonnet. Please remove any ice before closing the bonnet.

Hold the bonnet with both hands, lower it close to the locking position, and then press the front end of the bonnet with both hands until it is fully locked.

Front Compartment

Warning: While working on parts inside the front compartment, always observe the relevant safety precautions, refer to "Inspection and Maintenance" in this section.

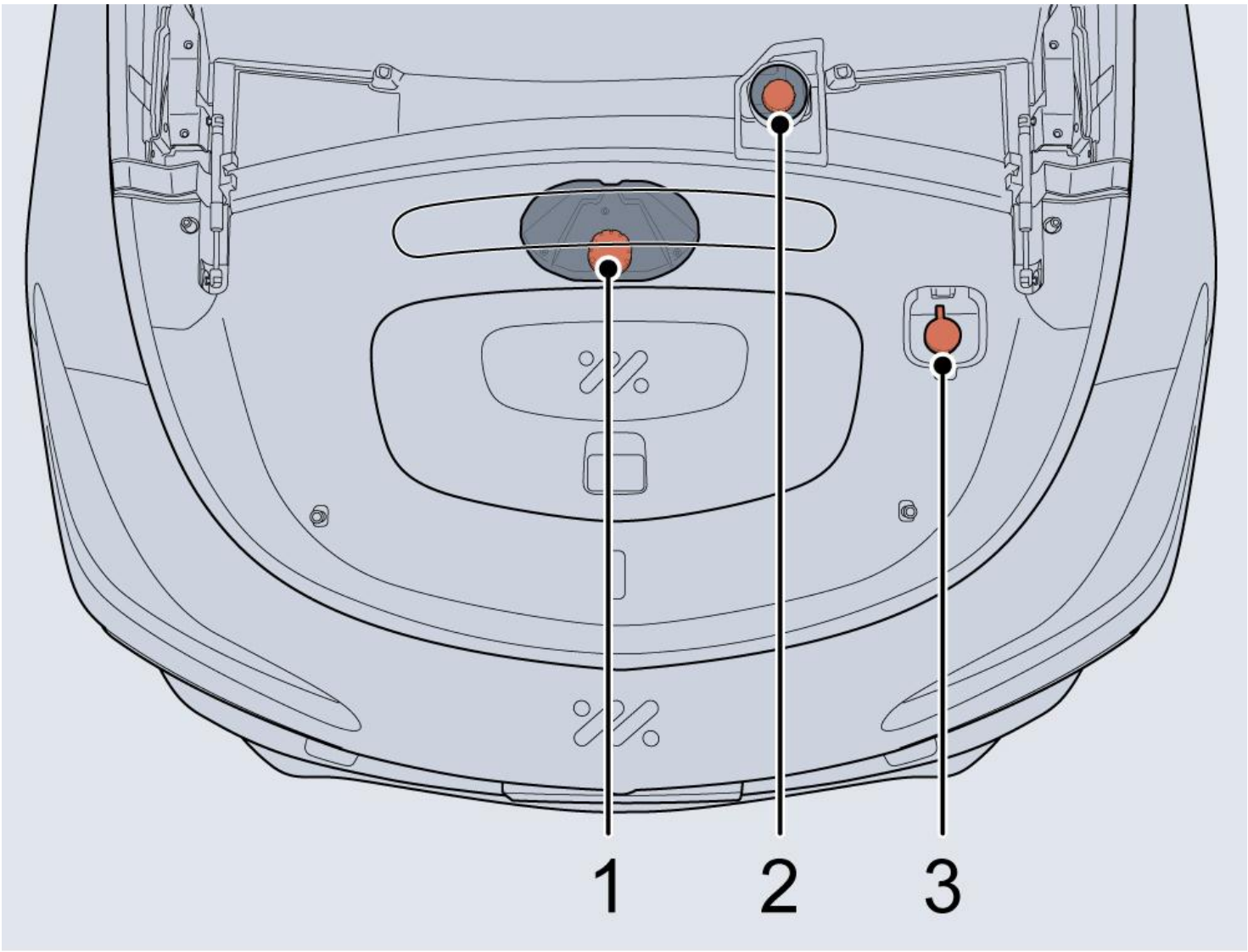

1. Coolant expansion tank

2. Brake fluid reservoir

3. Washer fluid reservoir

Battery

Battery Maintenance

Warning: DO NOT leave electrical appliances switched on for a long time when the vehicle is not in READY mode, the battery may become flat, causing failure to start the power system, and reduction of the battery's service life.

Warning: LVBM has a built-in battery management system, thus it is prohibited to dismantle the battery to avoid damage to the LVBM or cause personal injury.

Warning: Disconnect the LVBM negative battery cable before part replacement and vehicle repair/maintenance.

Warning: If the LVBM is charged using a professional device, the charging current should not exceed twice the rated capacity and the charging voltage should not exceed 14.4V. In addition, since the LVBM needs to communicate with the vehicle before it will work correctly and charged safely and quickly, it is important to ensure that connectors and harnesses are connected correctly and securely.

Warning: Do not remove the LVBM for charging without authorization.

The vehicle is equipped with a 12V low-voltage lithium battery system, referred to as LVBM, which is maintenance-free and located in the loadspace.

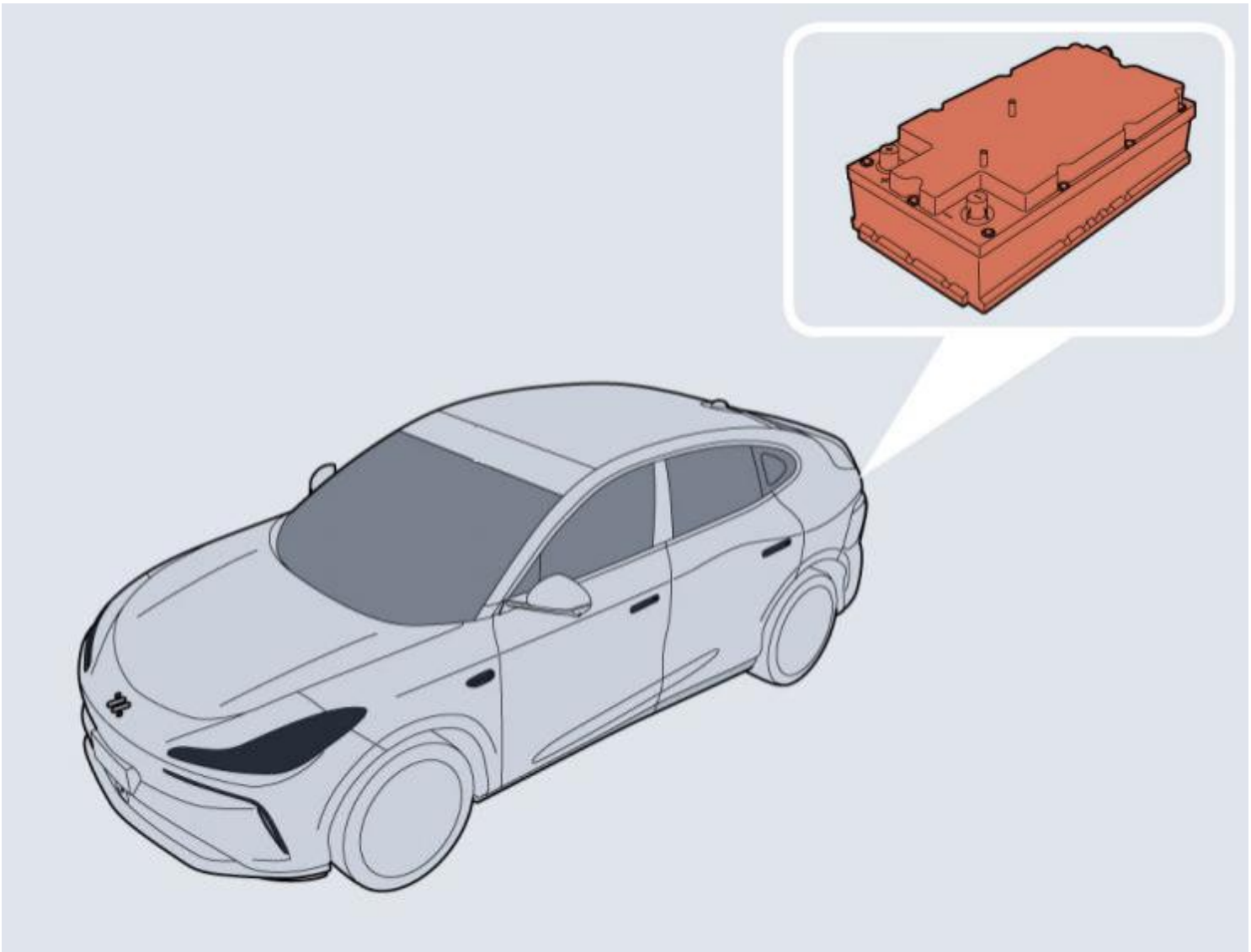

When the HV power battery is fully charged, the vehicle can charge the LVBM through the HV battery to extend the LVBM endurance.

Depending on the current load condition and the status of the battery, the system may limit the power of some electrical appliances, please set the vehicle to READY mode as soon as possible to charge the LVBM, and keep the vehicle powered for 1 - 2 hours.

Note:It is recommended to set the vehicle into READY mode for half an hour every week to help extend the service life of the battery. If the vehicle is stored for a long period of time (more than 1 month), remove the negative cable from the battery. Make sure that the vehicle is powered off before connecting or disconnecting the negative battery cable.

Battery Replacement

Please contact an Authorised Repairer to remove and install the battery. Only fit a replacement battery of the same type and specification as the original to maintain the correct vehicle functionality.

 Used batteries are harmful to the environment, therefore, they must be disposed of using an approved method and should be recycled by a professional company. Please consult an Authorised Repairer for more details.

Cooling System

Coolant Check and Top Up

Warning: DO NOT remove the coolant expansion tank cap when the cooling system is hot - escaping steam and hot coolant could cause serious injury.

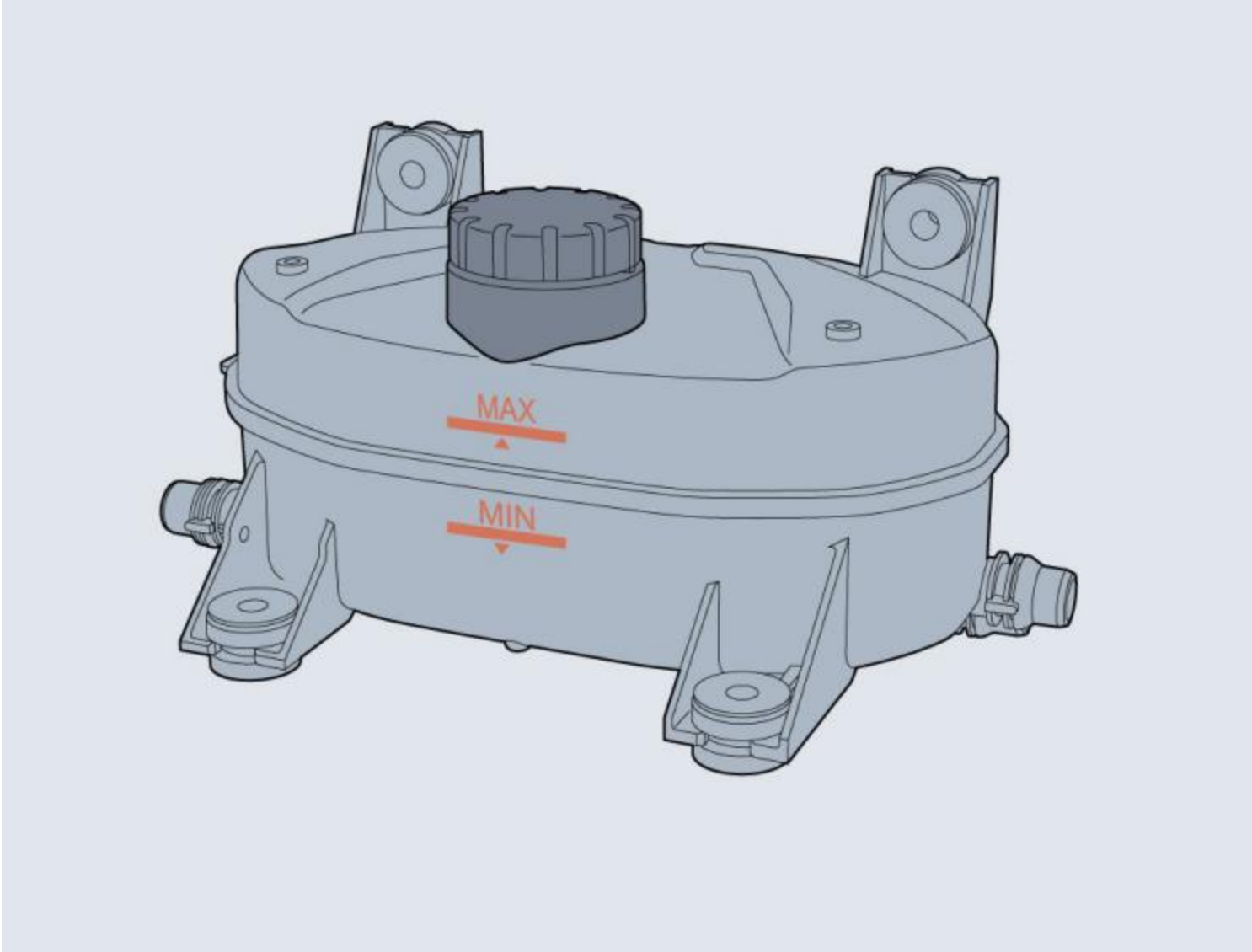

It is recommended that the cooling system should be checked weekly when the cooling system is cold and with the car resting on level ground. If the level is lower than the 'MIN' mark, open the coolant expansion tank cap and top up coolant, the level should not be higher than 'MAX' mark.

Note: Prevent coolant coming into contact with the vehicle body when adding coolant. Coolant will damage painted surface. If the coolant level falls appreciably during a short period, the cooling system may have a leak, please have it inspected as soon as possible by an Authorised Repairer.

Coolant Specification

Warning: Coolant is poisonous and can be fatal if swallowed - keep coolant containers sealed and out of the reach of children. If accidental contact of coolant by children is suspected, seek medical assistance immediately.

Warning: Prevent the coolant coming into contact with the skin or eyes. If this occurs, rinse immediately with plenty of water. If eyes are still red, painful or uncomfortable, seek medical attention immediately.

Please use the coolant recommended and certified. Refer to 'Recommended Fluids and Capacities' in "Dynamic Parameters" chapter.

Note: The addition of corrosion inhibitors or other additives to the cooling system of this car may severely disrupt the efficiency of the system and cause parts damage. For cooling system issues please consult an Authorised Repairer.

Brake System

Brake Pads

Warning: DO NOT rest your foot on the brake pedal while driving; this may overheat the brakes, reduce their efficiency and cause excessive wear to the brake components!

The free stroke of brake pedal is in the range of 0~30mm.

Reasonable usage scope of brake friction pair: not less than 2mm thickness for brake pads, 28~30mm for front brake discs, and 23~25mm for rear brake discs.

For the first 900 miles (1500 km), you should avoid situations where heavy braking is required.

Please ensure that all the brake components are examined for wear at the correct intervals, and replaced when necessary to ensure long-term safety during the interval prescribed according to the requirements in the warranty and maintenance manual.

The vehicle needs to run in for 500 miles (800 km) after the brake pads or discs have been is replaced.

Brake Fluid Check and Top Up

Warning: Brake fluid is highly toxic, keep containers sealed and stored out of the reach of children. If accidental contact of brake fluid is suspected, seek medical attention immediately!

Warning: Prevent brake fluid coming into contact with the skin or eyes. If this occurs, rinse immediately with plenty of water. If eyes are still red, painful or uncomfortable, seek medical attention immediately!

The brake fluid level should be checked weekly when the system is cold and with the car on level ground. Clean the cover first before opening the brake fluid reservoir.

The brake fluid level can be seen through the reservoir and should be maintained between the 'MAX' and 'MIN' marks.

Note: Do not allow the level to drop below the "MIN" mark or rise above "MAX" mark.

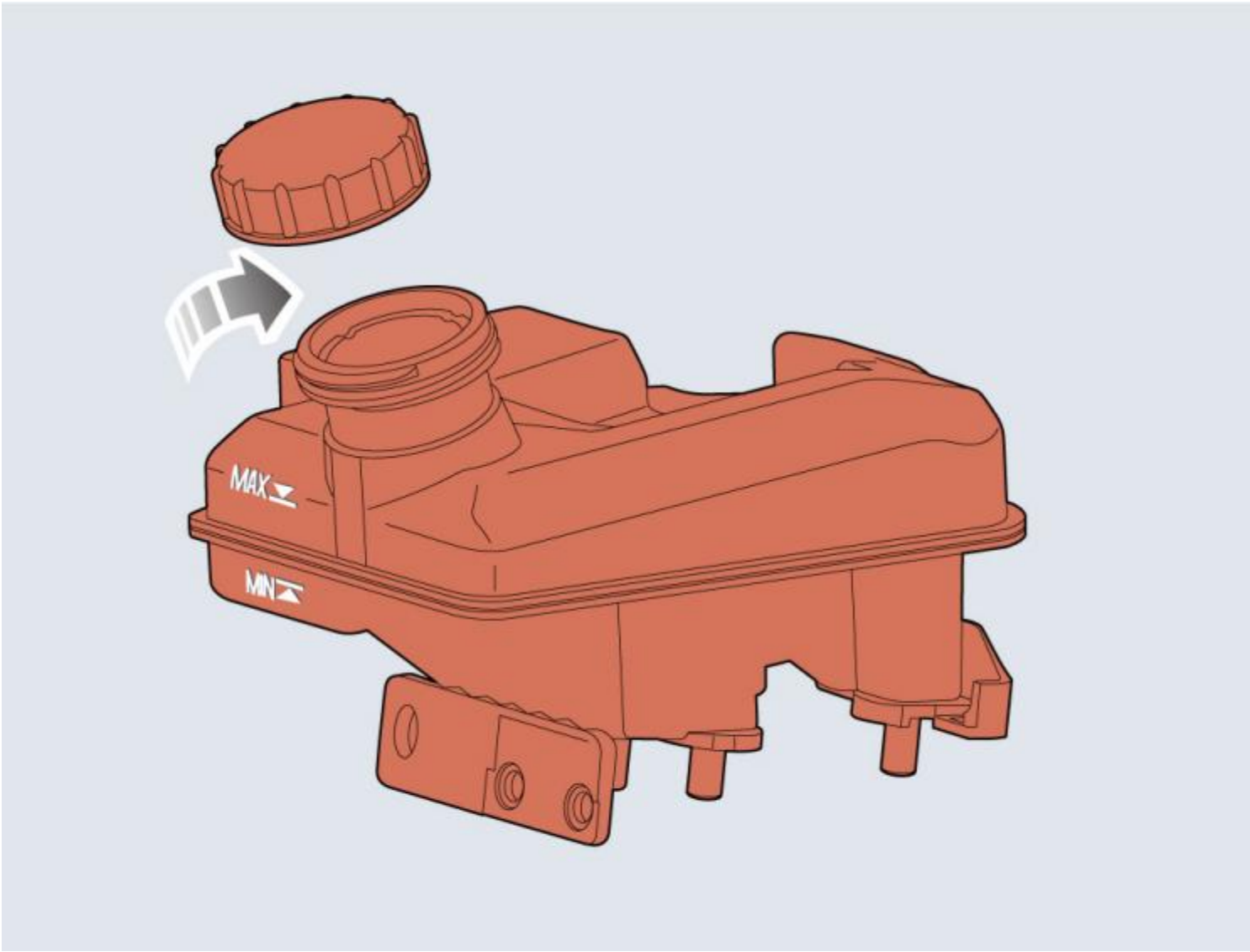

Note: Brake fluid will damage painted surfaces. If you accidentally spill the brake fluid on the painted surface, soak up any spillage with an absorbent cloth immediately and wash the area with water or car shampoo.

Brake Fluid Specification

Please use the brake fluid recommended and certified. Refer to "Recommended Fluids and Capacities" under "Dynamic Parameters" in the "Specification and Parameters" chapter.

IMPORTANT

Replace brake fluid regularly according to service schedule or Warranty and Maintenance Manual.

High-voltage Battery Pack

Service Life of High-voltage Battery Pack

DO NOT park the vehicle in conditions where the ambient temperature exceeds 45℃ for more than 15 days. This will affect the operational performance of the vehicle and the service life of the high-voltage battery pack.

To maintain or improve the service life of the high-voltage battery pack, it is recommended that you use a slow charging method wherever possible. Fast charging is mainly used for long distance journeys or emergencies.

If there is a serious accident, please contact an Authorised Repairer for inspection after the accident is handled.

Do not attempt to disassemble the high-voltage battery pack or any high-voltage components - these are dangerous. Any traces of disassembly or damage caused by attempted disassembly will void the warranty.

IMPORTANT
Unauthorised maintenance personnel are strictly prohibited from disassembling and assembling the high-voltage battery pack and related components.

Equalisation Charging

Where possible it is recommended that you carry out a slow charge (battery equalisation) every month to extend the service life of high-voltage battery pack.

Equalisation charging means that after a normal charging process the battery management system will enter a mode where it will attempt to equalise the charge of every battery cell, so as to ensure the overall performance of high-voltage battery pack.

Long-term Parking

It is recommended using the vehicle at least once a month.

If the vehicle is parked or stored for a long time, it must be charged at least once every 3 months (the battery power must remain above 50% on the instrument pack after charging). It is strictly prohibited to park or store the vehicle for more than 7 days when the high-voltage battery pack is low on power (no valid driving range shown on the instrument pack).

Washer

Washer Fluid Check and Top Up

Warning: Washer fluid is flammable. DO NOT allow washer fluid to come into contact with naked flames or sources of ignition.

Warning: When filling the washer fluid, DO NOT let the washer fluid spill on other components of the front compartment or on the paint surface of vehicle body. In case the washer fluid is spilled on hands or other parts of the body, please immediately wash with clean water.

Check the washer fluid level regularly. When the level of washer fluid is low, please top up the washer fluid as instructed. Use the washer fluid recommended and certified. Refer to "Recommended Fluids and Capacities" in the "Dynamic Parameters" chapter.



Note: DO NOT use an anti-freeze or acid solution (such as diluted vinegar) in the washer reservoir - anti-freeze will damage paintwork while acidic solutions will damage the washer motor.

IMPORTANT

Use the washer fluid recommended and certified by the manufacturer. Misuse of washer fluid in winter may cause damage to the washer motor due to freezing.

Using the washer switch when there is no washer fluid may cause damage to the washer motor.

Operating the wipers when the windscreen is dry and there is no washer fluid may cause damage to the windscreen and wiper blades. Please spray the washer fluid and start the wipers when there is adequate washer fluid.

Washer Nozzles

The windscreen washer nozzle is located on the A/C air intake grille panel.

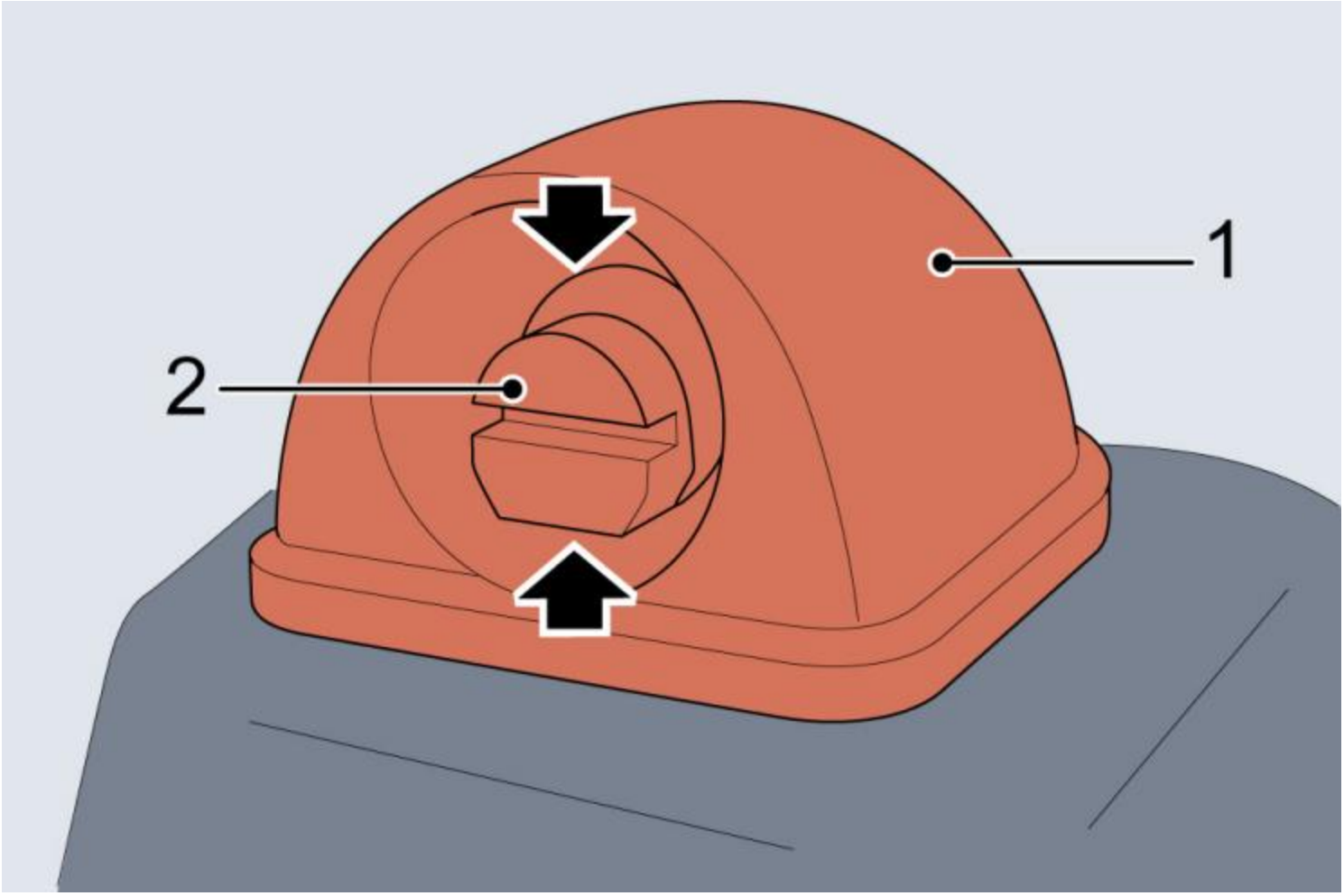

The angle of windscreen washer nozzle is configured during assembly. Do not make any adjustment to its direction. To adjust the windscreen washer nozzle, you can insert a small flat-bladed screwdriver in the gap (the area as indicated by the arrow) between the housing (1) and the nozzle (2) and turn it upward or downward slightly to achieve an appropriate washer jet angle.

Operate the washer to spray water periodically to check if the washer nozzles are clean and aimed in the correct direction. If the nozzle is obstructed, insert a needle or thin metal wire into the hole to remove the obstruction.

Wiper

Wiper Blades

IMPORTANT
Grease, silicon and petroleum products impair the blade's wiping capability. Clean the wiper blades in warm soap water, and check their status periodically.
Clean the windscreen frequently. DO NOT use wipers to remove the sediment on the windscreen, it will reduce their effect and their life span.
If signs of hardness or cracking in the rubber are found, or if the wipers leave streaks or unwiped areas on the windscreen, then the wiper blades should be replaced.
Clean the windscreen regularly with an approved glass cleaner and ensure the windscreen is thoroughly cleaned before fitting replacement wiper blades.
Only fit replacement wiper blades that are identical to the original specification.
If the wipers or windscreens are covered with ice or frozen, clean ice and snow from the wipers and windscreens before attempting to operate them to avoid possible damage.

Replacing Front Windscreen Wiper Blades



1. Keep the bonnet closed.

2. To put the wipers into service mode: You can set the path on the central screen: "Settings" - "General" - "Vehicle Power Supply" to turn off the vehicle power supply. Operate the wash and wipe button to Single Wipe position (see 'Wipe and Wash' in 'Before Using the Vehicle' section) and release within 20 seconds after powering off the vehicle, the wiper will automatically move to service position, and stop on the windscreen. You can also set the path on the central screen: "Settings" - "General" - "Wiper Maintenance Mode", then the wiper will automatically move to service position, and stop on the windscreen.

3. Lift the wiper arm away from the windscreen.

4. Press the button on the wiper arm (as illustrated), and pull the upper end of the wiper blade outward to disengage from the wiper arm.

5. Unhook the blade from the wiper arm and discard.

6. Locate the connector of new wiper blade into the slot of the wiper arm.

7. Push the wiper blade towards the wiper arm until the wiper blade is fully embedded.

8. Check whether the wiper blade is fitted correctly to the arm before positioning the wiper assembly on the windscreen.

9. After the vehicle is powered on, press the wiper switch again, the wiper will exit the service mode and automatically return to its original position.You can also set the path on the central screen: "General" - "Wiper Maintenance Mode",the wiper will exit the service mode and automatically return to its original position.

Tyres

Caring for Your Tyres

Your vehicle is equipped with general use tyres which may not be suitable for long-term use and storage at low temperatures. Because low temperatures may lead to a decrease in the tyre's performance, and even cracks may appear on the tread, if you drive your car in low temperatures, or on the snowy and icy roads, it is recommended to install winter tyres and anti-skid chains. Refer to "Driving in Winter "in this section for details.

The damage of a tyre or rim may happen unnoticed. If abnormal vibration or deviation is experienced, it may mean that the tyre may have been damaged. If you suspect that a tyre is damaged, please slow down immediately, and stop your vehicle to check the tyre for damage. If you can't see the damage from the outside, continue driving the vehicle slowly to the nearest Authorised Repairer or tyre centre for inspection and service.

During the use of tyres and wheels, attention should be paid to the followings:

1. New tyres may not have the same adhesion properties of the old tyres, please run in at moderate speed using a careful driving style for the first 300 miles (500km). This action could benefit tyre life.

2. You should drive at low speed when passing over kerbs or similar sections, if it is necessary to mount a kerb, then please try and ensure the wheel mounts the kerb at a 90 degree right angle so as not to damage the wheel rim or tyre sidewall.

3. Regularly check tyres for damage (punctures, scratches, cracks and pits), and remove any foreign objects such as stones as soon as possible. (Do not remove nails or screws that could have punctured the tyre, if a screw or nail is noticed seek advice from an Authorised Repairer or tyre centre immediately).

4. The valve dust cap must be fitted to prevent dust from entering the valve.

5. If the tyre is to be removed, always mark the tyre/wheel orientation to ensure correct refit.

6. Store the removed wheels or tyres in cool and dry places to keep out of direct sunlight.

7. General use tyres should be stored at room temperature when not in use. If the tyres have been used or stored at low temperatures, they should be placed in a space of not less than 5℃for 24 hours or above before you install them or drive a vehicle fitted with them.

8. Do not directly heat or blow warm air into, or onto the tyres.

Service Life of Tyres

Correct tyre pressures and a moderate driving style can extend tyre life. Recommendations during use are as follows:

- Check the tyre pressures at least once a month, it should be carried out when the tyre is cold;
- Avoid cornering at excessive speeds;
- Regularly check tyres for abnormal wear patterns.
- If the vehicle is to be stored for a lengthy time, please move your vehicle at least once every two weeks to ′rotate the tyres'.

The following factors affect the tyre life:

Tyre Pressure

Over or under-inflated tyres will cause the abnormal wear of the tyre, greatly shorten the service life, and have an adverse effect on the driving characteristics of the vehicle.

Driving Style

Fast driving, excessively harsh acceleration and braking whilst cornering will increase the tyre wear.

Wheel Balance

Every new vehicle leaves the factory having had the wheels dynamically balanced. Out of balance wheels may be due to many factors. If wheels are out of balance, shaking or vibration of the steering mechanism may occur and the tyres may start to wear excessively. It is important to restore wheel balance as quick as possible. Each wheel should be rebalanced after installing a new tyre or having a tyre repair.

Wheel Alignment Defect

Incorrect wheel alignment can cause excessive tyre wear and affect vehicle safety. If the tyres show signs of abnormal wear, seek advice from an Authorised Repairer and have the wheel alignment checked.

Check on Your Tyres

Warning: USING DEFECTIVE TYRES IS DANGEROUS! DO NOT drive if any tyre is damaged, is excessively worn, or is inflated to an improper pressure.

Warning:When replacing tyres it is strongly recommended that the new tyres are of the same specification as the original tyres. DO NOT replace the tyres with tyres of any other type. Alternative tyres, of a different specification, may adversely affect the vehicle's driving characteristics and safety. In order to maintain driving characteristics and safety , it is suggested that you consult an Authorised Repairer.

Always drive with consideration for the condition of the tyres, and regularly inspect the tread and side walls for any sign of distortion (bulges), cuts or wear.

Note: Prevent tyres from coming into contact with oil, grease and fuel.

Tyre Pressure

Warning: Before a long distance journey, always check your tyre pressures.

Tyre pressures should be checked monthly when the tyres are cold.

If it is necessary to check the tyres when they are warm, you should expect the pressures to have increased by 4.4~5.8 psi (i.e. 0.3~0.4 bar). In these circumstances, NEVER let air out of the tyres in order to match the recommended pressures (cold) in the technical data.

Valves

Keep the valve caps firmly secured - they prevent dirt from entering the valve. Check the valve for leaks (listen for a tell-tale hissing) when you check the tyre pressure. Your vehicle is equipped with tyres which may not leak if penetrated by a sharp object, provided the object remains in the tyre. If you are aware of this occurring, reduce speed immediately and drive with caution until repairs can be undertaken.

Note: If the sidewall of the tyre is damaged or distorted, replace the tyre immediately, do not attempt a repair.

Tyre Wear Indicators

The tyres fitted as original equipment have 1.6 mm-high wear indicators at the bottom of the tread, vertical with the wheel rolling direction and evenly distributed around the circumference. A mark on the tyre sidewall such as capital letters TWI or triangular symbol shows the location of wear indicator.

When the tread has been worn down to 1.6 mm or below, the indicators will come to the surface of the tread pattern, producing the effect of a continuous band of rubber across the width of the tyre.

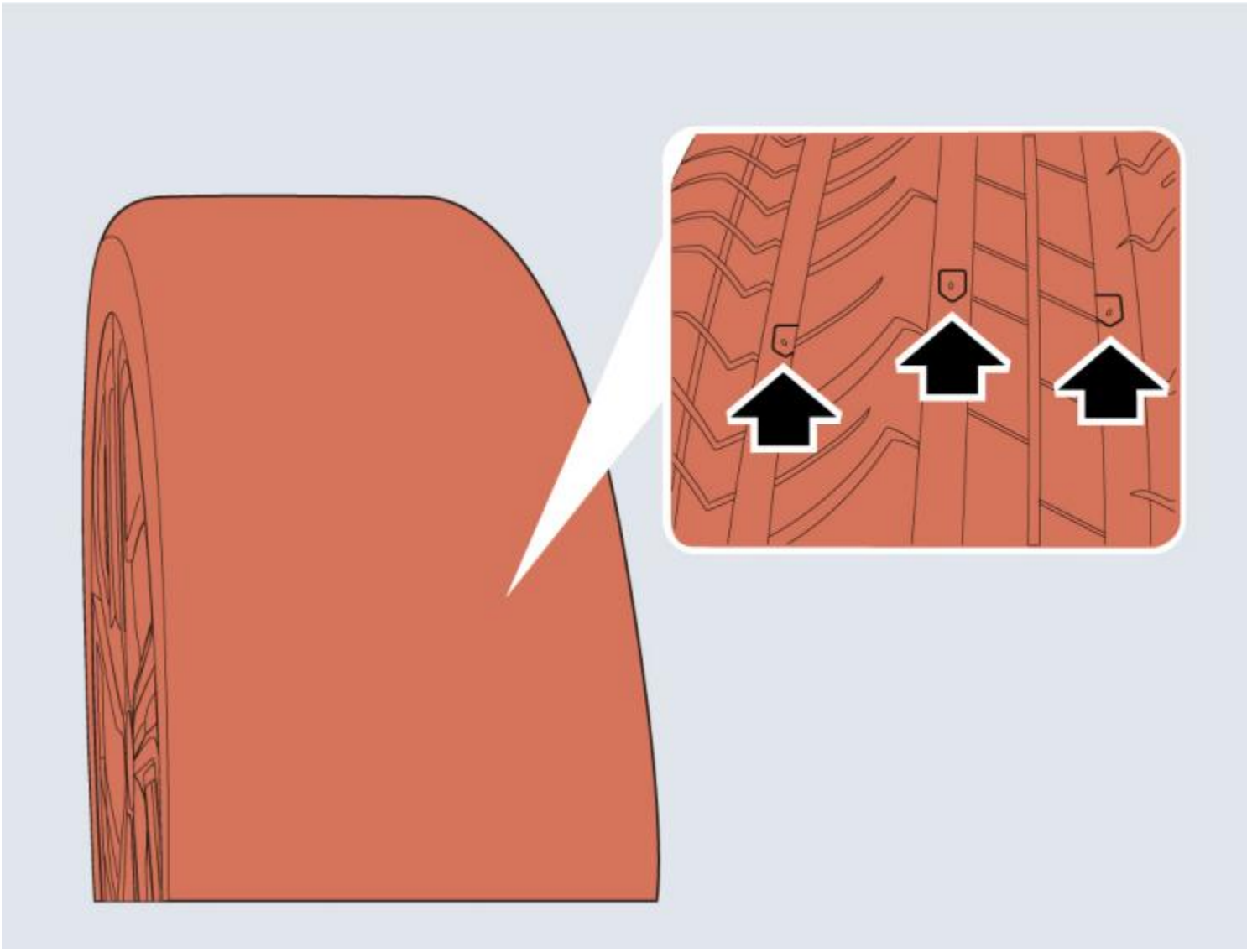

IMPORTANT

The tyre must be replaced when it is worn to reveal the wear indicator, worn tyres can cause accidents.

Driving in Winter

Winter Tyres

This series of models are not equipped with winter tyres when leaving the factory.

Winter tyres can improve the traction on snow covered and icy roads. If the vehicle frequently runs on snow covered and icy roads, you should consider installing winter tyres on the vehicle. When choosing winter tyres, the owners should note that:

- The four winter tyres must be the same brand and type;
- Only tyres with the same specifications, load range and speed class as the original tyres should be used.

The installation of winter tyres may result in reduced traction on dry roads, increased road noise, and shortened tread life. After the replacement of winter tyres, it is necessary to note the changes in vehicle operation and braking performance.

Anti Skid or Snow Chains

Unsuitable anti-skid or snow chains may damage the tyres, wheels, suspension, brakes or bodywork of your vehicle.

Please pay attention to the following requirements when using anti skid or snow chains:

- The anti-skid or snow chains can only be fitted on the rear drive wheels;
- The thickness of anti-skid or snow chains must not exceed 15 mm;
- Please always observe the installation and tension instructions for the anti-skid or snow chains, as well as the speed limitations of different roads;
- Do not drive faster than 31 mph(50 km/h);
- To avoid tyre damage and excessive wear of the anti-skid or snow chains, the anti-skid chains must be removed while driving on roads without snow.

Size and Specifications of Wheels and Tyres Supporting Anti-skid or Snow Chains for this Vehicle (rear drive wheels)	
Wheel Rim Size	9J×20 ET38
Tyre Size	255/45 R20 105V

Note: Before purchasing anti-skid or snow chains, ensure that the specifications of wheel rim and tyre are consistent with those in the above table to avoid failure to fit the anti-skid or snow chains.

Cleaning and Vehicle Care

Internal Care

Warning: The misuse of maintenance products may be harmful to health. Maintenance products must be stored safely, particularly out of the reach of children; otherwise, there is a risk of poisoning.

Warning: When applying film on or cleaning the interior of the vehicle, if water, alcohol, or other cleaning agents need to be sprayed, it is essential to take protective measures (such as placing suitable cloths or absorbent sponges around the spraying area) and promptly wiping off any liquid after finishing the application or cleaning to prevent any potential vehicle damage caused by liquid leakage into the onboard electrical systems.

Condenser, Radiator and Cooling Fan

During the daily driving, condenser, radiator and cooling fan of the vehicle may accumulate dirt, thereby resulting in the deviations in A/C system, cooling system and noise. During the routine servicing and cleaning, if any dirt is found, flush with clean water or wipe with a cloth. Be careful not to damage the fins of condenser and radiator and the cooling fan blade.

Air Conditioning System Cleaning

In the course of daily use, some dirt may accumulate inside the air conditioning system, thereby affecting its normal operation. Therefore, it is necessary to clean the interior of the air conditioning system. We recommend visiting an Authorised Repairer and entrusting the task to professionals for operation.

Note: It is recommended to use a spray-type cleaner for air conditioning cleaning to prevent any potential vehicle malfunctions caused by liquid leakage into the onboard electrical systems, etc.

Plastic Parts, Artificial Leather and Fabrics

You can clean plastic parts and artificial leather with a damp cloth. If the stain cannot be cleared, it is only allowed to wash these parts with a special solvent-free plastic cleaning and curing agent.

Cushions and fabric finishes at the doors, loadspace lid panel, roof and other points should be cleaned with special cleaner or dry foam and soft sponge.

Note: DO NOT polish instrument panel components – these should remain non-reflective.

Airbag Covers

Warning: DO NOT allow airbag cover areas to be flooded with liquid and DO NOT use petrol, detergent, furniture cream or polishes.

To prevent damaging airbags, only use a damp cloth and upholstery cleaner to carefully clean the following areas:

- Steering wheel centre pad.
- Area of instrument panel containing the passenger airbag.
- Area of roof lining which encloses the side head impact protection airbags.

Seat Belts

Warning: DO NOT use bleaches, dyes or cleaning solvents on seat belts.

Extend the belts, then use warm water and a non-detergent soap to clean. Allow the belts to dry naturally. DO NOT retract them or use them until they are completely dry.

Carpet and Fabrics

Before using diluted upholstery cleaner, test a concealed area first.

Leather

The leather used in vehicles possesses specific characteristics and peculiarities (e.g., sensitivity to oil, grease, and stains), which require careful handling and maintenance. For instance:

• Dark (particularly damp) and color-fading textile materials may transfer their color to the leather seats.

• Dust and dirt particles entering the pores and seams of the leather will abrade the surface of the leather. Consequently, regular maintenance or care based on the usage of the leather should be performed. For deep care, it is recommended to visit an Authorised Repairer.

Recommended Cleaning Method

1. Dip a white cleaning cloth into clean water, wring it out thoroughly, and gently wipe the leather surface to remove dust. Repeat this process 2-3 times. Open the windows for ventilation and allow it to air-dry naturally. Avoid exposing it to high temperatures or using a hair dryer to dry.

2. For soiling that cannot be removed with clean water, please use a solvent-free leather-specific cleaner or neutral soap for wiping.

Note: Common liquids containing solvent components are various types of alcohols, strong acids and bases, amides, oleic acids, and gasoline, etc.

IMPORTANT

Always clean at room temperature, and the temperature should not exceed 45 ℃.

- DO NOT use solvent-based cleaners: solvent-based cleaners (including ethanol) will cause colour loss/surface coating damage.
- It is recommended to clean immediately after contamination, some stains will be very difficult to remove if left for a long time.
- It is recommended to use all-polyurethane sponge for cleaning materials, and DO NOT use magic or wet wipe. It is recommended to choose non-woven fabrics with good water absorption and ethanol-free wipes for cleaning cloths.

Care Suggestions

- Use specialized leather treatments after each cleaning. Nourishing oil can nourish leather, making it flexible, breathable, and restoring moisture, while also establishing a protective layer on its surface.
- Clean the leather every two to three months to remove stains in a timely manner.
- Remove stains left by pen ink, shoe cream, etc. as soon as possible.

Note: DO NOT use petrol, detergents, furniture creams or polishes as cleaning agents.

Instrument Pack and Entertainment Display

Clean with a soft dry cloth only.

External Care

Vehicle Cleaning

Warning: It is recommended that you only clean the vehicle with the Power off, there may be risk of electrical hazards.

Warning: For vehicle cleaning in winter, moisture or icing in the braking system will reduce the braking effect, which may increase accident risk.

Warning: DO NOT use a high pressure water jet to clean the front compartment, damage to the car's electronic systems may occur.

Frequent cleaning and waxing can effectively protect the vehicle against harmful environmental impacts. Some covered areas, for example, doorsill footstep, sealed parts, cover plate, etc. should be cleaned periodically. The time interval of vehicle cleaning depends on many factors. For example:

- Operating frequency;
- Places for vehicle parking and storage, etc.;
- Seasons;
- Climatic conditions;
- Environmental impacts.

The longer adhesion of insect infectants, bird droppings, resin, road dust and industrial dust, asphalt, soot particles, snow melting salt and other erosive sediments to the automotive paint, the greater their adverse effects are. Too high temperature, such as intensive solar radiation, will also intensify the erosion. Therefore, please clean your vehicle according to the actual situation.

After the end of the salt spreading period in winter, be sure to thoroughly clean the bottom of the vehicle once.

Note: It is recommended that any cameras are protected whilst the vehicle is being washed to avoid damage from car wash equipment, brushes or hard objects.

Automatic wash equipment

The automotive paint has certain abrasion resistance, so you can clean the vehicle with automatic cleaning equipment in general. In fact, the structure of the cleaning equipment, the filtration of water, and the types of cleaning and curing agents have a certain impact on car paint. Please choose cleaning equipment that is suitable for your car.

Before cleaning, please be sure to lock the doors, close the windows and sunroof*, ask the cleaning equipment operator whether the roof antenna is to be removed; if your vehicle is provided with spoiler, roof rack, radio antenna and other installed parts, you must inform the cleaning equipment operator.

Manual cleaning

When manually cleaning your vehicle, please carefully choose cleaning agents according to actual needs and rinse the vehicle with clean water after using the cleaning agents.

IMPORTANT
• Do not clean the vehicle in direct sunlight, there is a risk of paint damage. • When cleaning the vehicle in winter avoid spraying water directly onto door locks, panel gaps and sunroof seams due to risk

of icing.

- Do not use rough sponges or cloth to clean the car, this will damage the paintwork finish.
- When cleaning the lamps do not use a dry cloth or sponge, use a soft microfibre cloth with a small amount of room temperature water/soapy water to clean the lamps.

Cleaning with high pressure cleaner

Before cleaning: Please be aware of the operating instructions and precautions for the high-pressure washer. Check and ensure that the front and rear doors, hood and tailgate, the charging port door (if any), the refueling door (if any), and the concealed door handles (if any) are closed.

When cleaning: It is essential to regulate the jet pressure and maintain a proper distance between the jet nozzle and the cleaning zone, particularly for soft materials such as rubber hoses and soundproofing materials; avoid continuous rinsing in the same area for an extended period.

After cleaning: it is necessary to gently apply the brakes a few times to remove moisture from the brake discs to prevent impairment of the braking performance and to avoid rust on the brake discs. Any remaining residues on the windows, rearview mirrors, etc., should be thoroughly cleaned to ensure an unobstructed view.

IMPORTANT

The soft parts on the vehicle should be kept in a large enough distance from the injection port of the high pressure cleaner.

- **High-pressure rinsing may cause damage or peeling off of the stickers on the paint surface.**

IMPORTANT

- DO NOT spray the nozzle of the high-pressure cleaner directly into the door cracks, windows, sunroof, bonnet and tailgate, etc.
- DO NOT attempt to flush any open front and rear doors, bonnet and tailgate, small doors, etc.
- DO NOT spray or clean a window glass that is frozen or has been covered with snow.
- DO NOT spray directly onto connectors, seals, tyres, rubber hoses, heat insulation materials or other sensitive vehicle parts (such as small doors, small door locks, door locks, sensors, radars, cameras, etc.), and DO NOT hold a high pressure water jet in one position for a long time.
- DO NOT use a circle beam nozzle or rotary nozzle, especially for the tyres, this may cause damage.

Waxing

A high quality wax layer can effectively protect the automotive paint against harmful environmental impacts and even provide protection against minor hard scratches. If you find that water drops can no longer smoothly roll down on clean paint, you should recoat the vehicle with a high quality hard wax curing agent. You should apply hard wax at least twice a year to protect the automotive paint even in regular use of wax curing agent for cleaning the vehicle with the automatic cleaning equipment.

Polishing the paintwork

Polishing is required only when the automotive paint has tarnished and can not be recovered even by waxing.

If the applied polishing agent does not contain a waxy composition, you must wax the paint after polishing; occasionally treat the paint surface with an approved polish containing the following properties:

- Very mild abrasives to remove surface contamination without removing or damaging the paint.

- Filling materials to cover the scratches.
- Wax to provide a protective coating on the paint surface.

Note: Do not treat parts or plastic parts coated with matte paint by using the polishing agent.

Paint damage

A small area of paint damage, such as scratches or damages after being struck by stones, should be immediately coated with paint to avoid rusting. If rusting has appeared, you must remove it thoroughly, then apply anti-corrosive primer to this portion, and finally apply finish.

Matte paint

Matte paint is a special type of coating that requires special care in car washing and car care.

It is recommended to wash the car manually and do not use rough sponges or cloth. Do not use excessive force when cleaning and wiping. Avoid washing the car in direct sunlight.

- Do not use high pressure water jet or steam to clean the vehicle. If the vehicle is quite dirty, a pre-cleaning is required before washing. Clean the body dust and other particles that may damage the paint surface first.
- Spray the vehicle body with a large amount of water, and use a soft sponge and neutral wax-free car wash solution to clean the vehicle from the roof downwards and then dry the vehicle body.

During the daily care of your car, attention should also be paid to:

- If the paint film comes into contact with resin or grease, as well as insect residue or bird excrement, please remove it immediately to avoid irreversible damage to the matte paint surface.
- If there are oil stains or fingerprints on the matte paint surface, immediately remove them with a clean cloth and do not use excessive force to avoid irreversible damage to the matte paint surface.
- To maintain the matte effect of the paint surface, abrasives, polishes, and waxes cannot be used, and the vehicle body cannot be polished.
- Do not use any stickers, pasters, magnets, or similar materials to prevent damage to the paint surface.
- Ensure that any repairs to the matte paint film are carried out in a qualified professional repair workshop.

Wiper blades

Wash in warm soapy water. DO NOT use spirit or petrol based cleaners.

Windows and mirrors

Regularly clean all windows, inside and out, using an approved glass cleaner.

Windscreen: Clean the outside of the windscreen with glass cleaner before fitting new wiper blades.

Rear window: Clean the inside with a soft cloth, using a side to side motion to avoid damaging the heating elements. DO NOT scrape the glass or use abrasive cleaning compositions – this will damage the heating elements.

Rearview mirrors: wash with soapy water. DO NOT use abrasive cleaning compositions or a metal scraper.

Sunroof (where fitted): Regularly clean the tracks on both sides of the sunroof and the front drainage channel. For panoramic sunroofs, the front end of the rear glass (after the front glass is fully opened) should also be cleaned regularly to prevent the accumulation of dust, sand, leaves, and other debris, which may clog the drainage holes and lead to poor sunroof drainage.

Plastic parts

Plastic parts can be cleaned using the conventional method of cleaning. When the stain is not easy to remove, you can use a special curing agent for treatment, note, a paint curing agent is not preferable for treatment of plastic parts.

Weather strips

Rubber weather strips of doors, front and rear cover lids, sunroof and windows should be irregularly coated with rubber curing agent (such as silica gel spray) to keep their flexibility and extend the service life.

Exterior Lamps

It is recommended to use mild neutral detergent to clean the surface of the lamp. Avoid using organic solvent cleaners containing alcohols, polyhydroxy alcohols and strong polarity (such as foam cleaner, glass cleaner, thinner, deicer, paint treatment agent, etc.), otherwise the surface of the lamp may crack and the lamp may become damaged. During vehicle cleaning or polishing operations, the headlights should be protected.

Wheels

Warning: Moisture, ice and snow melting salt may reduce braking effect, this may lead to an increased accident risk.

You can prevent braking abrasive dust dirt and snow melting salt from attaching to the wheels by cleaning the wheels. Braking abrasive dust that is not easy to remove may be cleared with non-acid rim cleaner.

Light alloy wheels

In order to maintain a good appearance of the light alloy wheels, regular care is required, if snow melting salt and braking abrasive dust are not washed off regularly, the light alloy wheels will erode.

Always use non-acid special cleaner for cleaning. Do not use paint polishing agent or other products containing abrasives for wheel care, if the protective cover of paint has been damaged (such as damage after being stuck by stones), you must immediately repair the damaged part.

Protective bottom layer

The bottom of the vehicle is coated with a special durable protective material for protection against the effects of chemical and mechanical factors. But we recommend you to inspect the bottom of the vehicle and the protective layer of the chassis on a regular basis since the protective layer can not be protected against damages when the vehicle is in service, and it is preferable to inspect once before the cold season starts and once after it comes to an end.

Specifications and Parameters

Vehicle Identification

Vehicle Identification Number (VIN)

Vehicle Identification Number (VIN)

Always quote the Vehicle Identification Number (VIN) when communicating with an Authorised Repairer. If the drive motor or electric drive unit is involved, it may be necessary to provide the identification numbers of these assemblies.

Vehicle Identification Number (VIN) Location

- Stamped on the instrument panel visible through the bottom left hand corner of the windscreen;
- On the vehicle identification plate;
- On the cross beam facade under the front right seat;
- On the inside of the tailgate.

Note: The DLC of the vehicle is located above the driver's lower closure panel, and the VIN information can be read with the diagnostic scan tool.

Other Numbers

Front Axle Number*

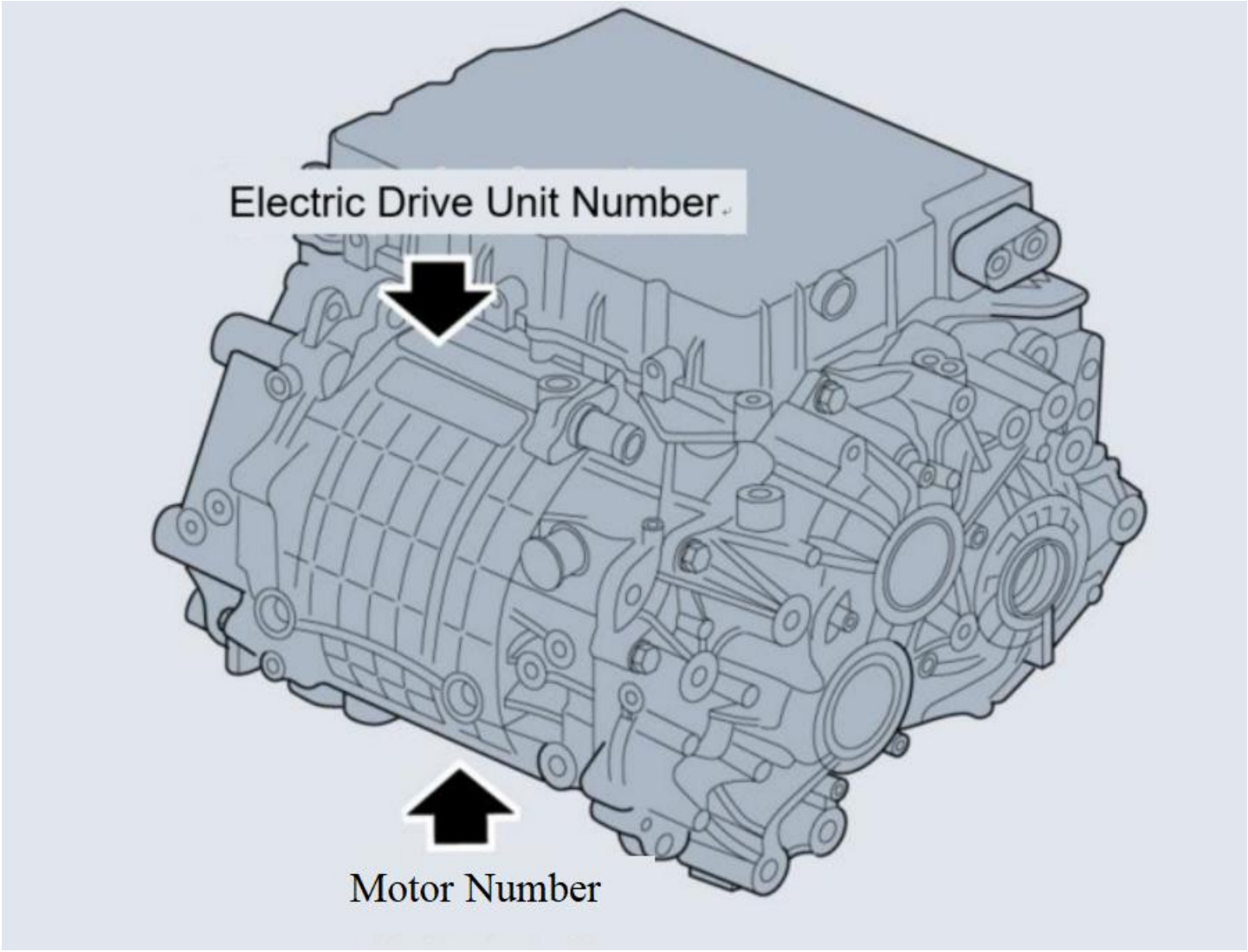

Rear Axle Number

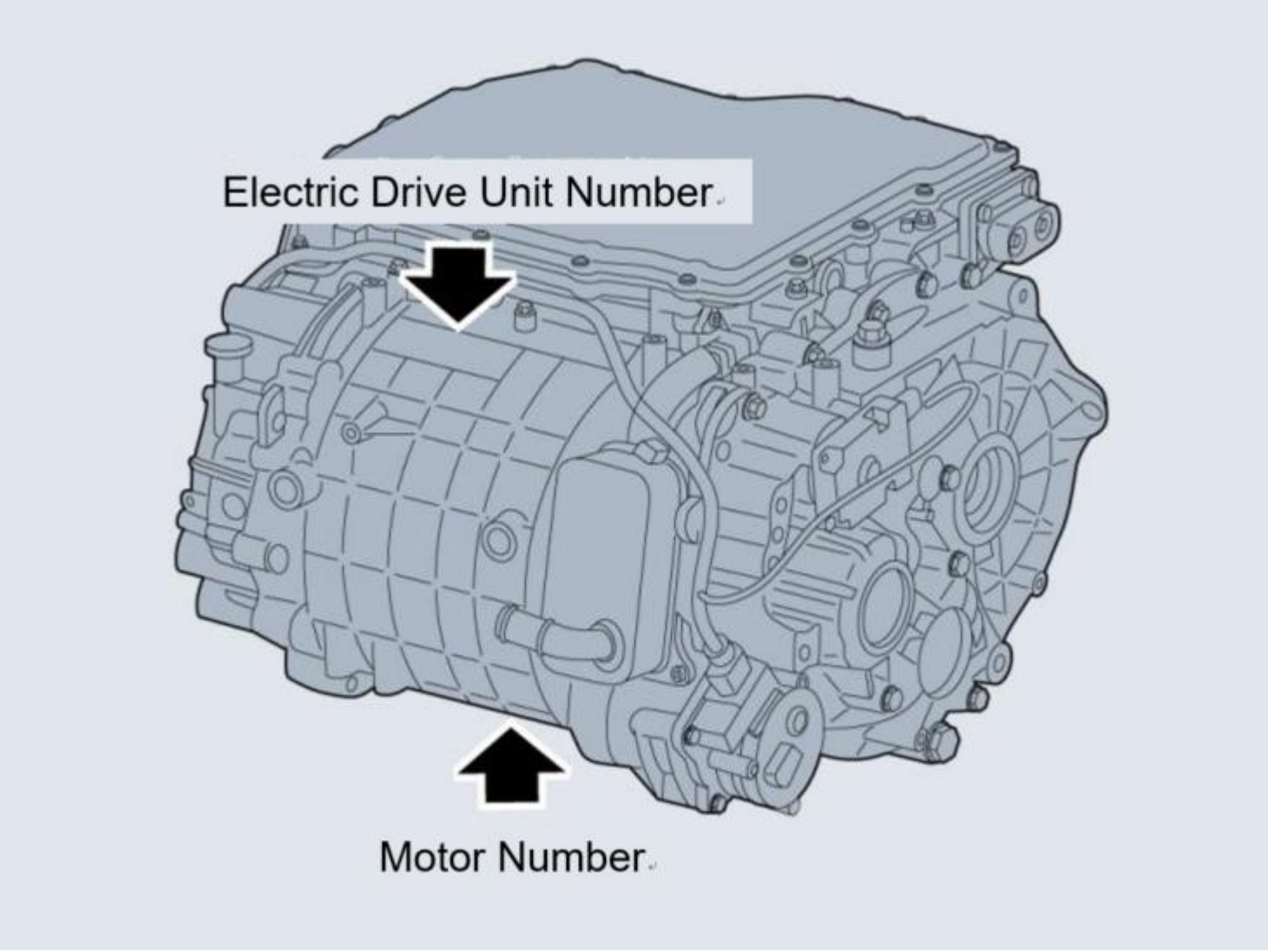

Rear Axle - Motor Code

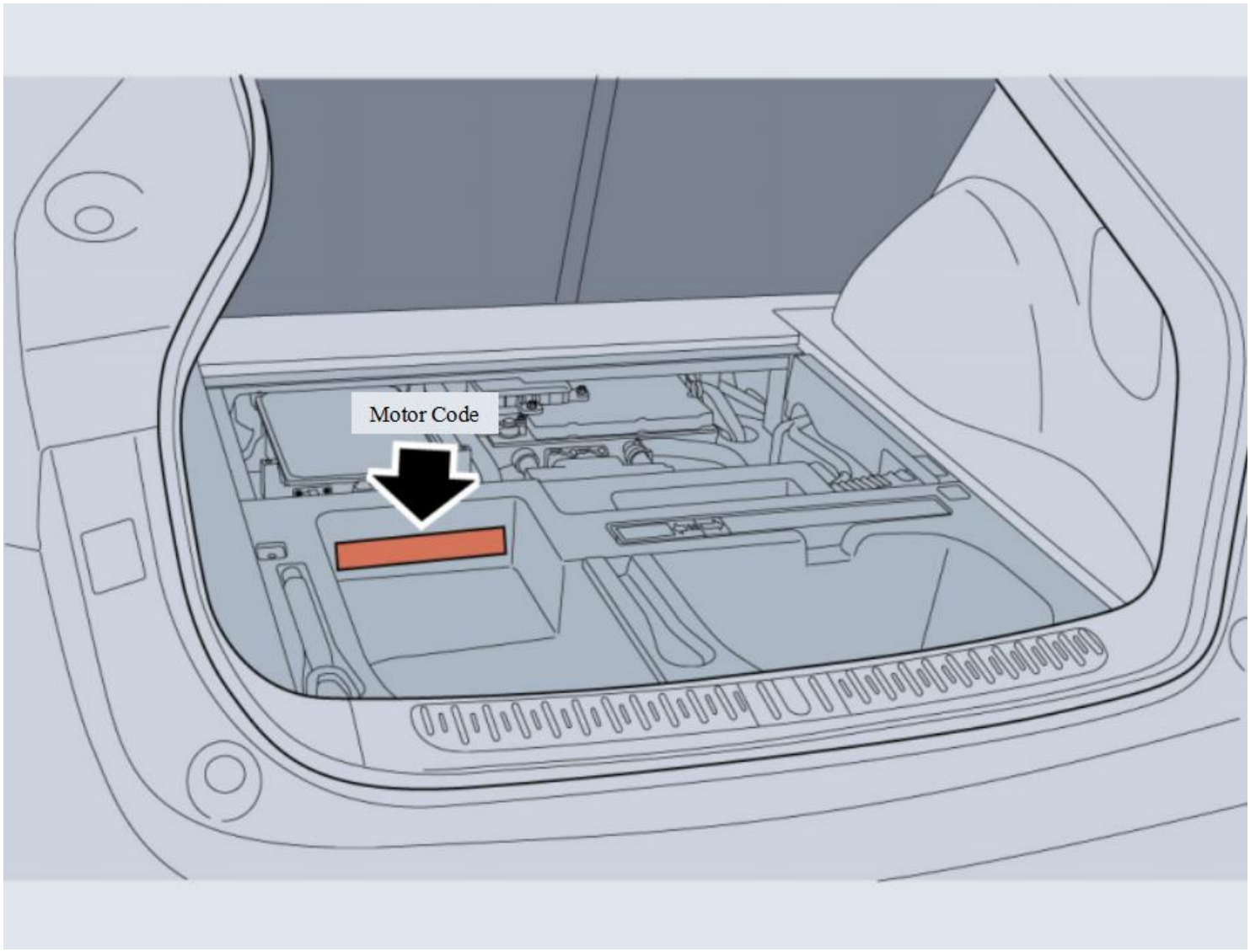

Vehicle Identification Plate

The identification plate is located at the lower side of left or right pillar B. The vehicle identification plate contains the brand, vehicle identification number, manufacturing date, etc.

Vehicle Parameters

Technical Data Dimensions

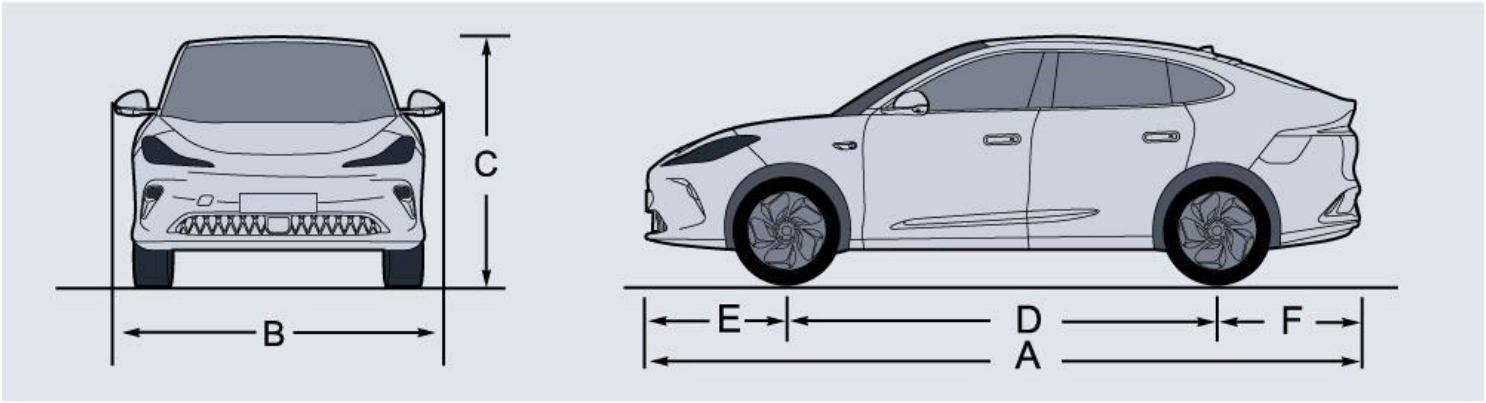

Item	**Parameters**
Overall length A, mm	4904
Overall width B, mm	1988
Overall height C (unladen), mm	1669
Wheelbase D, mm	2950
Front overhang E, mm	970
Rear overhang F, mm	984
Front wheel track, mm	1698
Rear wheel track, mm	1707
Minimum ground clearance (laden), mm	144

Note: The vehicle length excludes license plate.

Note: Rearview mirrors and the deformed portion of tyre wall directly above the touchdown point are not included in the overall width.

Complete Vehicle Mass Parameters

Item	Parameters		
	75kWh RWD	100kWh RWD	100kWh AWD
Person in cab, person	5		
Unladen vehicle weight (kerb), kg	2310	2350	2445
Unladen front axle weight, kg	1095	1104	1198
Unladen rear axle weight, kg	1215	1246	1247
Gross vehicle weight, kg	2731	2771	2861
Laden front axle weight, kg	1187	1221	1314
Laden rear axle weight, kg	1544	1550	1547

Dynamic Parameters

Drive Motor Performance Parameters

Item	Front axle motor parameters	Rear axle motor parameters
Motor type	Permanent magnet synchronous motor	Permanent magnet synchronous motor
Rated power/peak power, kw	80/200 (800V-100kWh)	143/217 (400V-75kWh)
		109/109 (400V-75kWh, SG)
		157/300 (800V-100kWh-RWD)
		190/379 (800V-100kWh-AWD)
Peak torque, Nm	302	450 (400V)
		500 (800V)
Rated speed/Max. speed, rpm	11000/21000(800V-100kWh)	7000/17000(400V-75kWh)
		9000/20000(800V-100kWh-RWD)
		10000/21000(800V-100kWh-AWD)

Towing Weights

Towing parameters

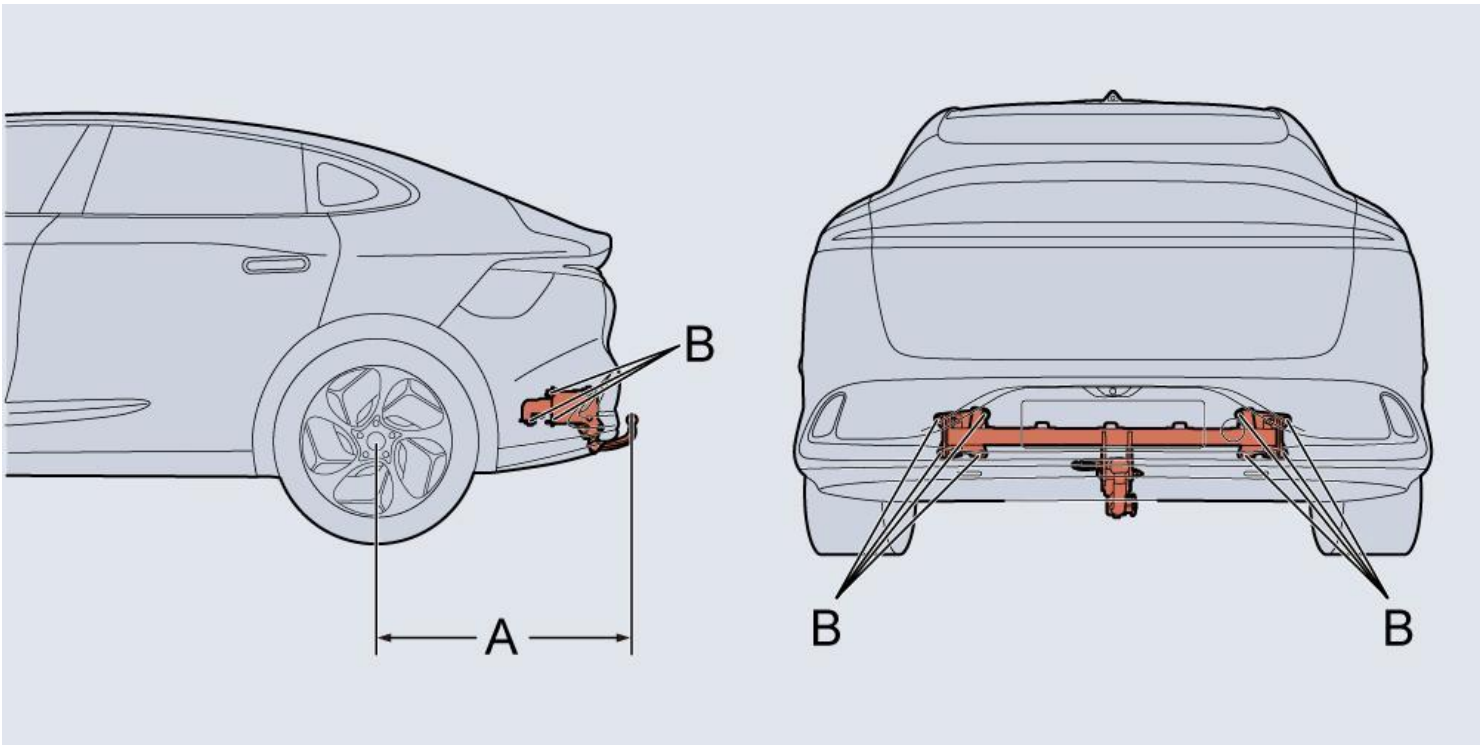

Item, Units	Parameters
Towing limit unbraked, kg	750
Towing limit braked, kg	1500
Towing hitch load, kg	75
Wheel centre to centre of tow ball A, mm	1070
Towing device mounting points	B

Note:: When towing a trailer, the vehicle speed MUST not exceed 62mph (100km/h).

Note: Prior to towing a trailer, please check the rear tyre pressures, inflate to at least 20 kPa (0.2 bar) above the recommended pressure. DO NOT allow the tyre pressure to exceed 300 kPa (3.0 bar), this can be dangerous.

Dynamic Performance Parameters

Item	Parameter		
	75kWh RWD	100kWh RWD	100kWh AWD
Maximum speed, km/h	200	220	239
Gradeability, %	>35	>35	>35

Parameters of High-voltage Battery Pack

Parameter	Value	
Battery Type	EB210A75S	
Capacity (Ah)	210@1C@25℃	
Capacity Fade (%)	10@840cycle@25℃	
Power (W)	SOC	BOL discharge power(W)@10s@25℃
	80%SOC	337882
	20%SOC	273470
Power Decay (%)	10@840cycle@25℃	
Internal Impedance (Ω)	SOC	BOL discharge DRC()@4C@25℃
	50%	0.076
Internal Resistance Increase (%)	16@840cycle@25℃	
Energy Conversion Rate (%)	95@25℃	
Energy Loss Rate (%)	3.5@840cycle@25℃	
Cyclelife	2310ycle@70%SOHe@25℃	
Calendar life	13year@70%SOHe@25℃	

Parameter	Value	
Battery Type	EC133A100S	
Capacity (Ah)	133.2@1C@25℃	
Capacity Fade (%)	10@560 cycle@25℃	
Power (W)	SOC	BOL discharge power(W)@10s@25℃
	80%SOC	430175
	20%SOC	332867
Power Decay (%)	10@560 cycle@25℃	
Internal Impedance (Ω)	SOC	BOL discharge DRC()@4C@25℃
	50%	0.122
Internal Resistance Increase(%)	32@560 cycle@25℃	
Energy Conversion Rate (%)	96@25℃	
Energy Loss Rate (%)	3@560 cycle@25℃	
Cyclelife	1015 cycle@80%SOHe@25℃	
Calendar life	11 year@80%SOHe@25℃	

Recommended Fluids and Capacities

Name	Grade	Capacity
Coolant, L	Glycol (OAT)	15 (75kWh) 18(100kWh RWD) 18.2(100kWh AWD)
Front electric drive unit fluid, L	Shell E-Fluids E6 iX	1.1
Rear electric drive unit fluid - 400V, L	Shell E-Fluids E6 iX	2.35
Rear electric drive unit fluid - 800V, L	Mobil EV Cool Drive 308	2.35
Brake fluid, L	DOT 4	0.8
Windscreen washer fluid, L	Factory-Recommended Windshield Washer Fluid	3.5
Air conditioning refrigerant	R-134a*	960±20g
	HFC-1234yf* contains fluorinated greenhouse gases	0.96±0.02kg
		GWP 0.501
		CO_2 eq 0.00049098t

Wheel and Alignment

Four-wheel alignment parameters (unladen)

		Parameter
Front wheels	Camber angle	-15′±45′
	Castor angle	5°50′±45′
	Toe-in angle (total toe-in)	12′±15′
	King pin inclination	7°′±45′
Rear Wheels	Camber angle	-1°±45′
	Toe-in angle (total toe-in)	12′±15′

Tyre Pressures (Cold)

Wheels	Unladen	Laden
Front wheels	250 kPa/2.5 bar/37psi	250 kPa/2.5 bar/37psi
Rear Wheels	280 kPa/2.8 bar/41psi	280 kPa/2.8 bar/41psi
Spare Wheel *	280 kPa/2.8 bar/41psi	280 kPa/2.8 bar/41psi

Tyre Size

Wheel Rim Size	Front 8J×20	Front 8.5J×21
	Rear 9J×20	Rear 10J×21
Tyre Size	Front 235/50 R20 104V	Front 235/45 R21 101V
	Rear 255/45 R20 105V	Rear 265/40 R21 105V
Spare Wheel *	Spare Wheel Size	8J×20
	Spare Tyre Size	235/50 R20 104V